INDEX OF STANDARD DRAWINGS

HIGHWAY ITEMS

PAGE NO.	TITLE OF DRAWING
1.	Standard Symbols
2.	Standard Symbols
3.	Standard Symbols
4.	
5.	
	CURBS – GUTTERS
6.	Curb, Type A–1, L–1
7.	Curb, Type B–1, B–2, B–3
8.	Curb, Type P–1, P–2, P–3
9.	Curb, Type R–1, R–2, P–4
10.	Curb, Type S–1, S–2, S–3
11.	Downspout Leader–conc. curb type B's.
12.	Downspout Leader–conc. curb type P's.
13.	Downspout Leader–conc. curb type R's.
14.	
15.	
	DRIVEWAYS
16.	Residential Driveway Construction
17.	Commercial Driveway Construction
18.	Driveway Reconstruction
19.	Replacing Integral Curb w/ Drop Curb at Driveways & Maximum Driveway Grades
20.	Modified Commercial Driveway Const.
21.	
22.	
23.	
	PAVEMENT
24.	Roadway Sections for Concrete Pavement
25.	Roadway Sections for Asphalt Pavement
26.	Joint Layout for Intersections
27.	Standard Restoration of Openings
28.	Standard Restoration of Openings
29.	
30.	
31.	
32.	

PAGE NO.	TITLE OF DRAWING
	WALLS
33.	Page Deleted
34.	Modified Toe Wall
35.	Standard Railing Detail
36.	Inclinometer Installation Detail
37.	
38.	
39.	
40.	
41.	
	STEPS
42.	Precast Concrete Steps
43.	Cast in Place Concrete Steps
44.	Handrail
45.	
46.	
47.	
48.	
49.	
50.	
	MISCELLANEOUS
51.	Stakes Standard
52.	Traffic Island & Pier Protection Detail
53.	Handicap Ramp Details
54.	Bicycle Rack – Type A
55.	
56.	
57.	
58.	
59.	
60.	
61.	
62.	
63.	
64.	

PAGE NO.	TITLE OF DRAWING
	LANDSCAPING
65.	Tree Wells
66.	Planting and Bracing
67.	Tree Planting (2 Stake Method)
68.	Tree Pruning
69.	
70.	
71.	
72.	
73.	
74.	
	STREET REHABILITATION DETAILS
75.	Concrete Curb Repair
76.	Full Depth Asphalt Repair in Concrete Pavement
77.	Partial Depth Asphalt Repair in Concrete Pavement
78.	Partial Depth Asphalt Repair in Asphalt Pavement
79.	Adjusting Manholes
80.	Concrete Pavement – Full Depth Repair
81.	
82.	
83.	
84.	
85.	
	STORM SEWER ITEMS
	See sheet nos. 100 – 143

MAY 1995

STANDARD SYMBOLS

ITEM	SYMBOL
State Line	(Indiana) / (Ohio)
County Line	(Hamilton County) / (Butler County)
Township Line	(Miami Township) / (Green Township)
Corporation Line	(City of Cincinnati) / (County of Hamilton, Amberley Village, Etc.)
Section Line	(Section 25) / (Section 24)
Prop. Fence Line	Prop. ____ Fence
Ex. Fence Line	Ex. ____ Fence
Ex. Center Line	
Prop. Center Line	
Existing Curb Line	(Always Face of Curb)
Proposed Curb Line	
Future Curb Line	
Existing Conc. Wall	
Existing Stone Wall	(Width Drawn To Scale)
Existing Brick Wall	
Proposed Wall	
Edge of Conc. Walk, Asph. Covered Conc. Pav't., Brick, & Granite Pav't.	
Edge of Macadam, Gravel, & Crushed Stone Pav't	

STANDARD SYMBOLS

ITEM	SYMBOL
Limited Access Line	L/A L/A
Ex. R-O-W Line	R/W R/W
Prop. R-O-W Line	R/W R/W
Property Line	ℙ ℙ
Survey Line	ℒ
Construction Line	℄
Base Line	ℬ
Point of Intersection	
Curve Points	P.C. P.T.
Station Indication	10
Existing Flow Arrow	
Prop. Flow Arrow	
Railroads	For 1"=10' to 1"=40' / For 1'=50' and Over
Prop. Curb Grade Line (Unless Otherwise Marked)	89.21 25' 89.35 20' 89.24 0.5%-120 (Elev's., Dist's., Etc. for illustration only (4))

STANDARD SYMBOLS

ITEM	SYMBOL
Profile of Property Line Closest to Bottom of Plan	
Profile of Centerline of Street	
Profile of Property Line Closest to Top of Plan	
Ex. Sewer & Manholes	Ex. P.S. (Indicates Direction of Flow) (12" & Over to Scale)
Prop. Conduit & Manhole	Prop. Conduit
Water Line	W W W
Gas Line	G G G
Telephone Line	T T T
Electric Line	E E E
House Connection	HC HC HC HC
Existing Guard Rail	
Prop. Guard Rail	
Dumped Rock	
Buildings	#2113 2 St. Frame D.S. = 62.52 House No.s, etc., for illustration Only; P. Fl.= 2.40 (Porch)

Label Size, Type, Direction of Flow (if applicable), and if line is existing or proposed.

STANDARD SYMBOLS

ITEM	SYMBOL
Toe of Fill	
Top of Cut	
Construction Limits	
Slopes	Cut Fill
Bridges	
Culverts	Headwalls
Streams	Intermittent; Creek; River
Marsh or Swamp Land	
Top of Ground	

STANDARD SYMBOLS

Ex. Manhole

Manhole To Be Adjusted/Reconstructed (2')

Prop. Manhole

Ex. Water Valve Chamber

Water Valve Chamber To Be Adjusted/Reconstructed (2')

Prop. Water Valve Chamber

Gasoline Pump Island

Underground Tank Caps (Tank Caps)

Ex. Single Gutter Inlet

Single Gutter Inlet To Be Adjusted/Reconstructed

Prop. Single Gutter Inlet (2'-8", (4) S.G.I., 1'-7")

Ex. Double Gutter Inlet

Double Gutter Inlet To Be Adjusted/Reconstructed

Prop. Double Gutter Inlet (5'-3", (4) D.G.I., 1'-7")

Ex. Combination Inlet

Combination Inlet To Be Adjusted/Reconstructed

Prop. Combination Inlet (5'-3", 1'-7", (4) C.I., 12")

Ex. Ditch Inlet

Ditch Inlet To Be Adjusted/Reconstructed

Prop. Ditch Inlet (3'-10", (4) D.I., 2'-8")

Ex. Double Ditch Inlet

Double Ditch Inlet To Be Adjusted/Reconstructed

Prop. Double Ditch Inlet (5'-3", 3'-10", (4) D.D.I.)

Ex. Curb Inlet (3' or 5')

Ex. Fire Hydrant (12")

Prop. Fire Hydrant

Coal Hole (C.H.)

Cellar Door (C.D.)

Window Well & Grating

Size From F.N.'s

Sign (Label or Use a "Key" for the description)

Yard Drain, Drives, Etc. (Dr.)

Tree (Dia. in Inches) (1.0') (Dia. From F.N.'s)

Hedge

Bush

Guy Wire

Ex. Traffic Signal (Arrows are placed according to the number and position of the faces. Label if a Flashing Signal) (12")

Prop. Traffic Signal

General Pole (12")

Light Pole

Power or Electric Pole

Telephone Pole

Ex. Water Box (W.B.) (12")

Ex. Water Meter (W.M.)

Gas Box (G.B.)

Parking Meter (P.M.)

Police Call Box (P.C.B.)

Fire Alarm Box (F.A.B.)

Mail Box (M.B.)

Stump

NOTE:
Symbols should be drawn to scale on all plans drawn to a scale 1" = 20' or larger. On smaller scale drawings, symbols should be drawn to a scale of 1" = 20'. Size of lettering used to indicate existing features shall be No. 3 size obtained with Ames Lettering Guide or equal. Figures in parentheses, such as (4), indicate size of lettering to be used with proposed work. Notes, etc. shown in parentheses with symbols are for illustration and information only. Dimensions are for information only.

N (To Left or Top of Drawing)

APPROVED T.C. Young

March 1991

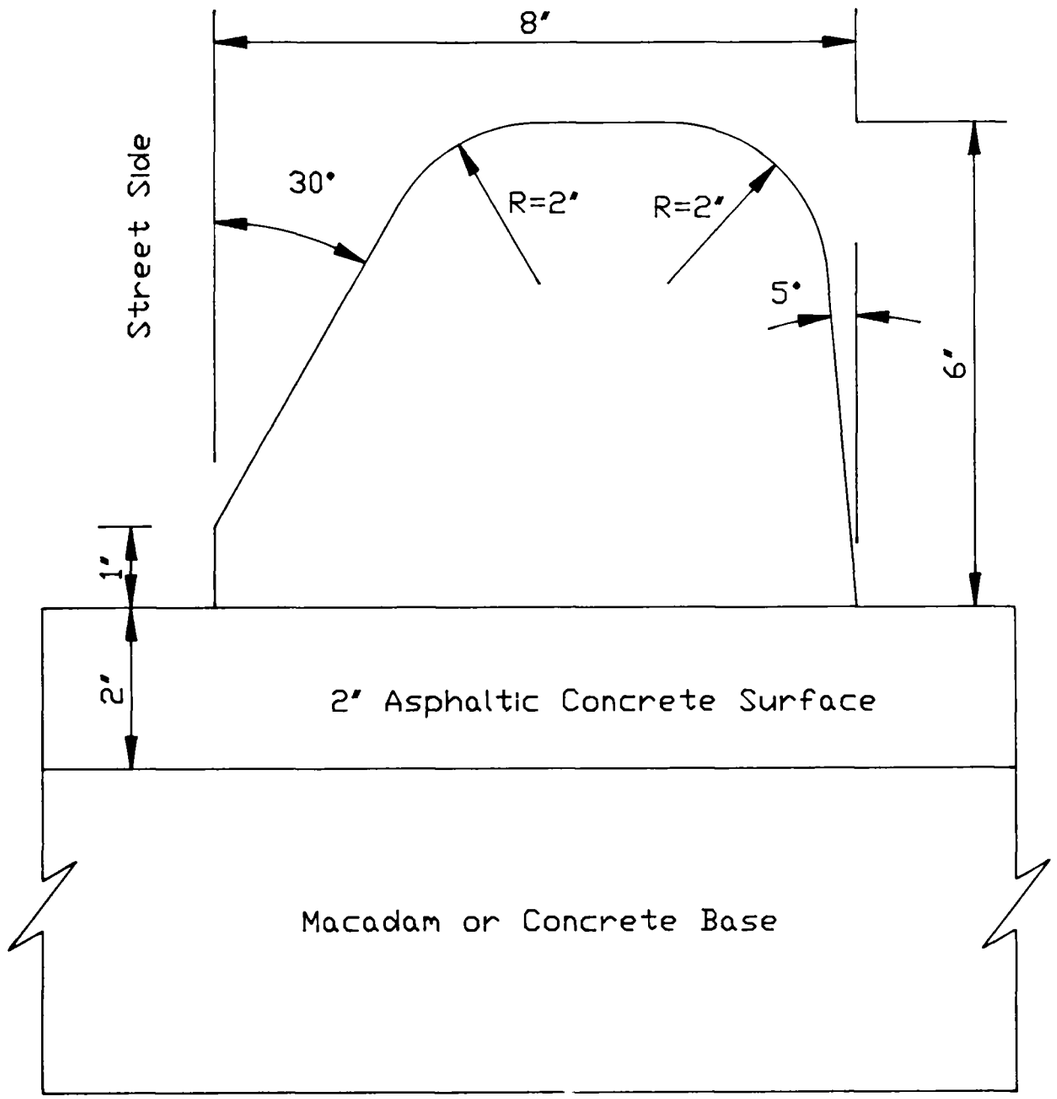

TYPE A-1

Area of Curb Section - 28 sq. in.
Yield - 72 +/- per portion of Asphaltic Concrete.
Quantity - 0.194 cu. ft. per linear foot

CITY OF CINCINNATI
DEPARTMENT OF PUBLIC WORKS
DIVISION OF ENGINEERING

ASPHALTIC CONCRETE CURB

SCALE: 1/2"=1" FEBRUARY , 1991

APPROVED: T.E. Young
CITY ENGINEER

ACC. NO. 21429

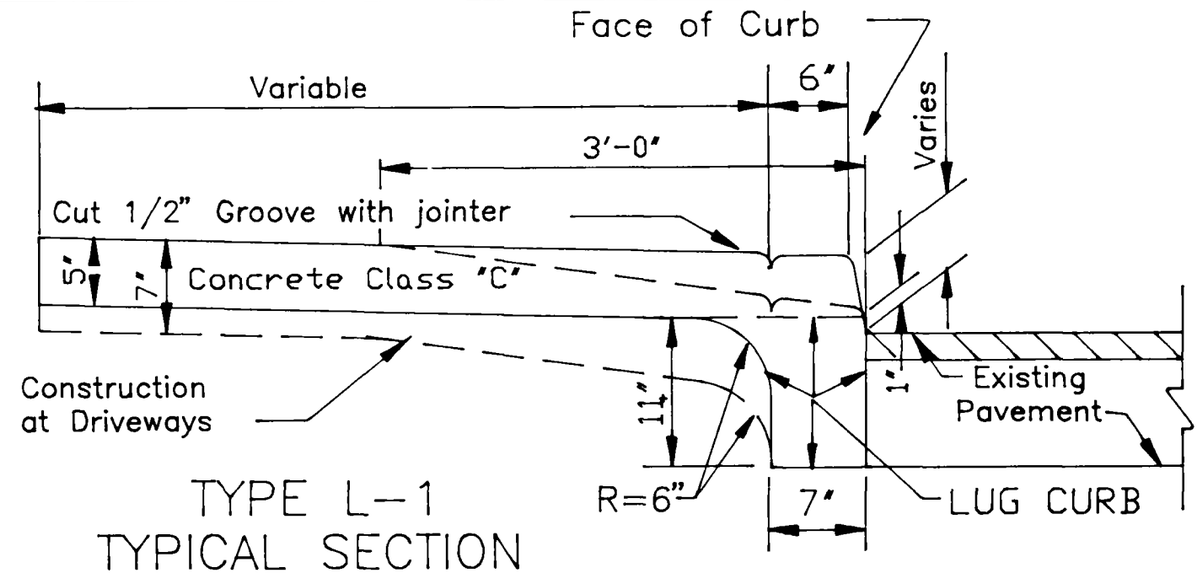

TYPE L-1
TYPICAL SECTION

NOTE: Use 2.0% cross slope on walk and 6" gutter depth unless grade details are furnished or local conditions require otherwise.

Concrete used and method of finishing and curing shall conform to that specified for Item 608-Conc. Walk and Steps current Ohio State Spec's.

Payment for Concrete Walks constructed integral with Lug Type Concrete Curbs will be based on measurement from back of walk to face of curb and considered uniformly 5" thick.

Payment for Lug Type Concrete Curbs at the price bid per linear foot shall cover the necessary excavation and furnishing and placing the concrete for the "Lug", which shall be considered to be all of the concrete below a plane passing through the bottom of the walk and intersecting the face of curb.

All Radii are 1" unless otherwise noted

CITY OF CINCINNATI
DEPARTMENT OF PUBLIC WORKS
DIVISION OF ENGINEERING

STANDARD LUG CONCRETE CURB

INTEGRAL WITH CONCRETE WALK

SCALE : NONE May , 1995

Approved: T. Young
CITY ENGINEER

ACC. NO. 21430

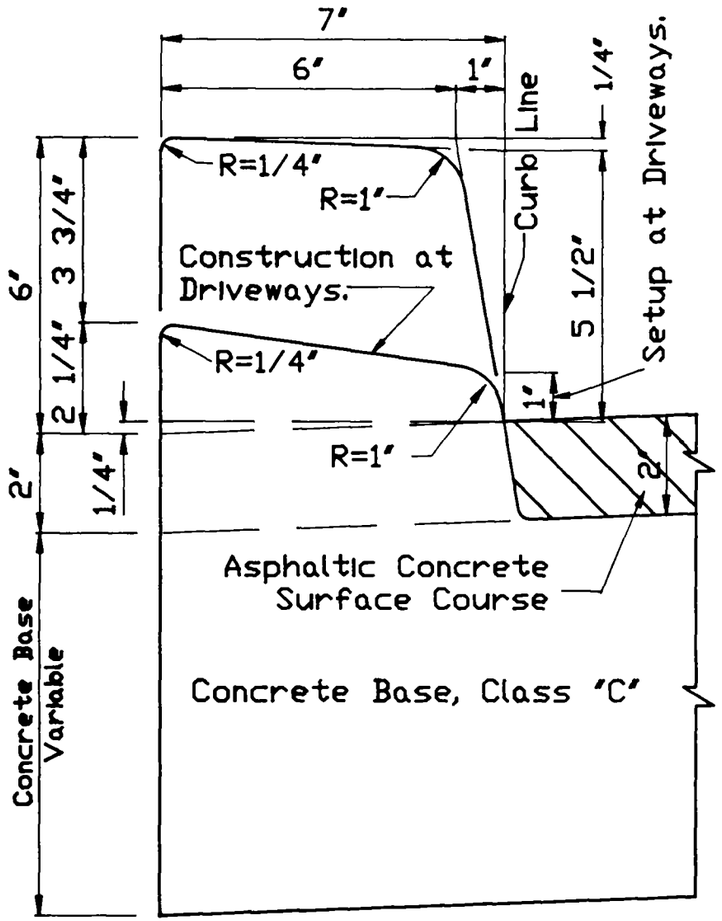

TYPE B-1
BATTERED

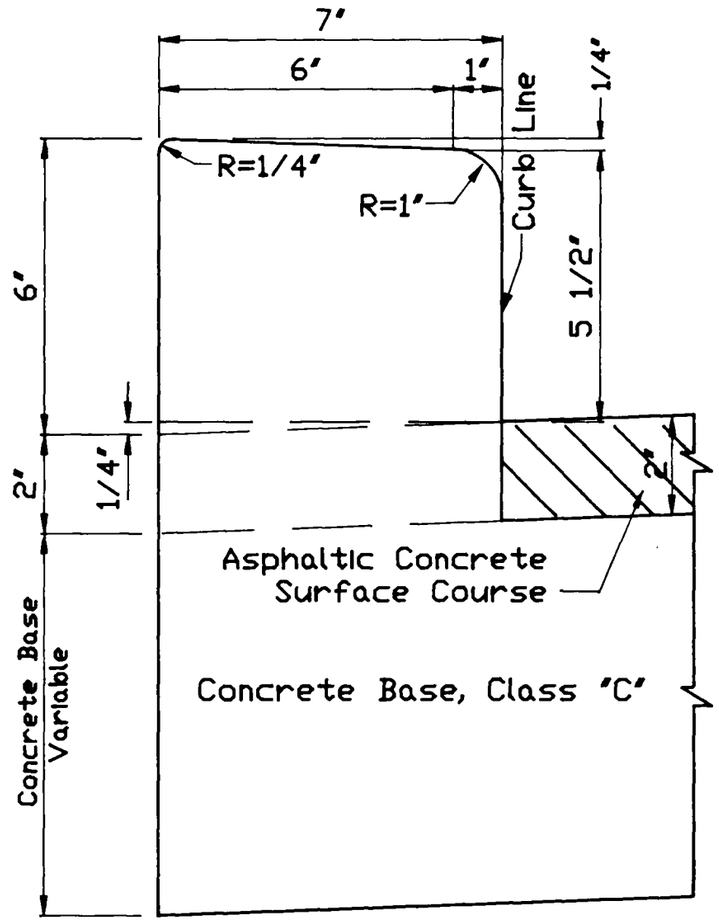

TYPE B-2
CIRCULAR

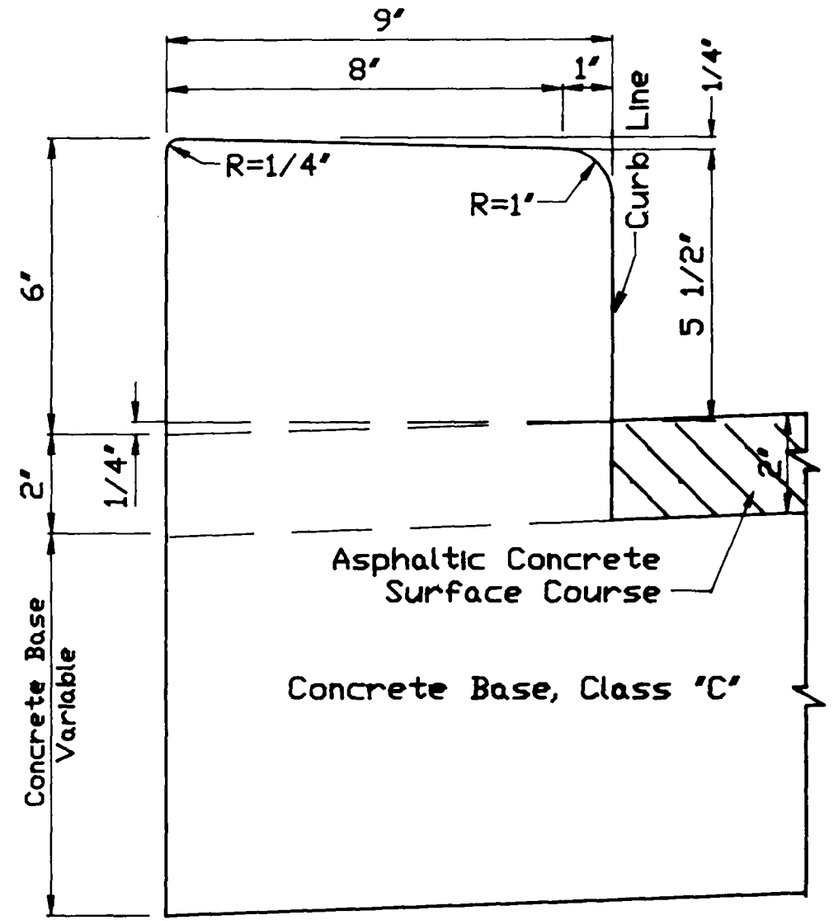

TYPE B-3
CIRCULAR

NOTE:
After the Standard Concrete Curb Integral with Concrete Base, has been constructed, a minimum time period of two weeks must elapse before the Asphaltic Concrete Surface Course is placed on the Concrete Base.

NOTE:
The Construction of Type B-2 and B-3 Curb shall apply only to radii less than one hundred (100) feet and shall not be used on larger radii curves.

CITY OF CINCINNATI
DEPARTMENT OF PUBLIC WORKS
DIVISION OF ENGINEERING

CONCRETE CURBS INTEGRAL WITH CONCRETE BASE

SCALE: 5/16"= 1' FEBRUARY, 1991

T. Young 4-3-91
CITY ENGINEER

ACC. NO. 21431

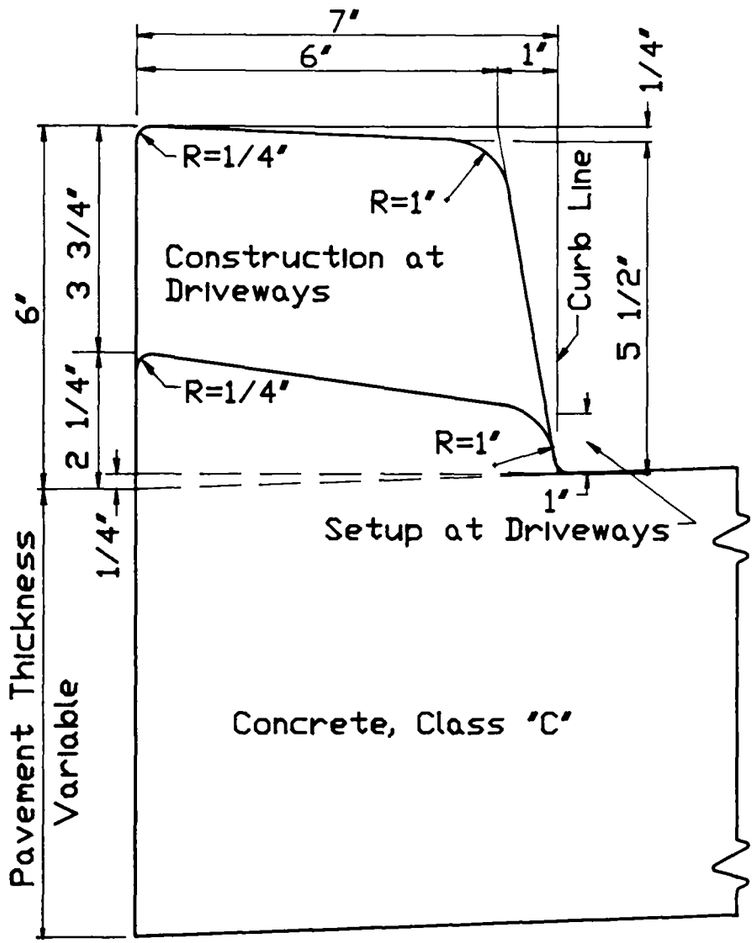

TYPE P-1
BATTERED

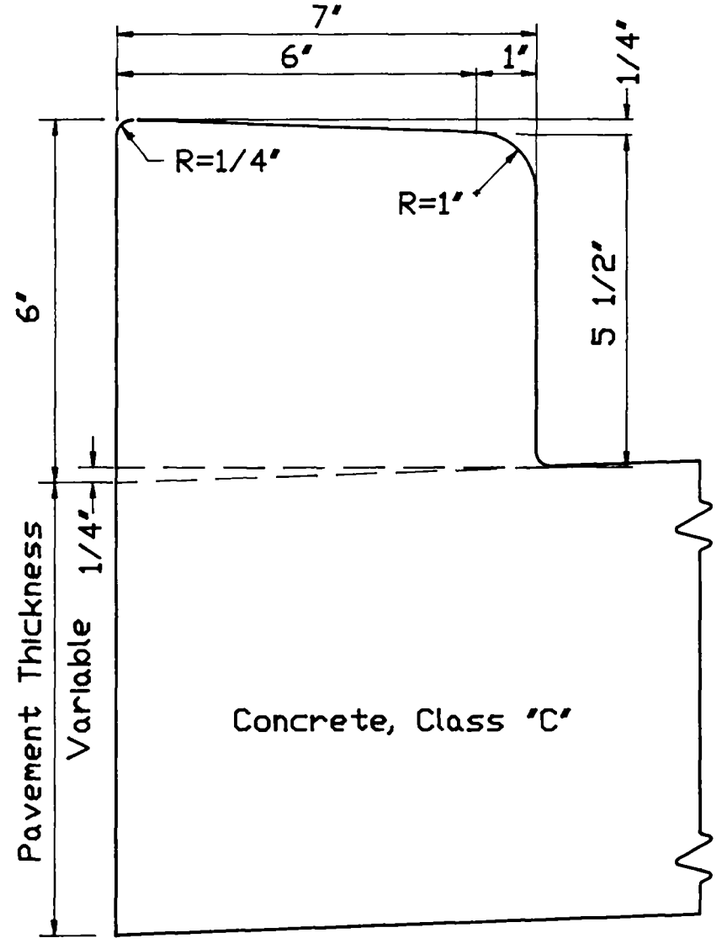

TYPE P-2
CIRCULAR

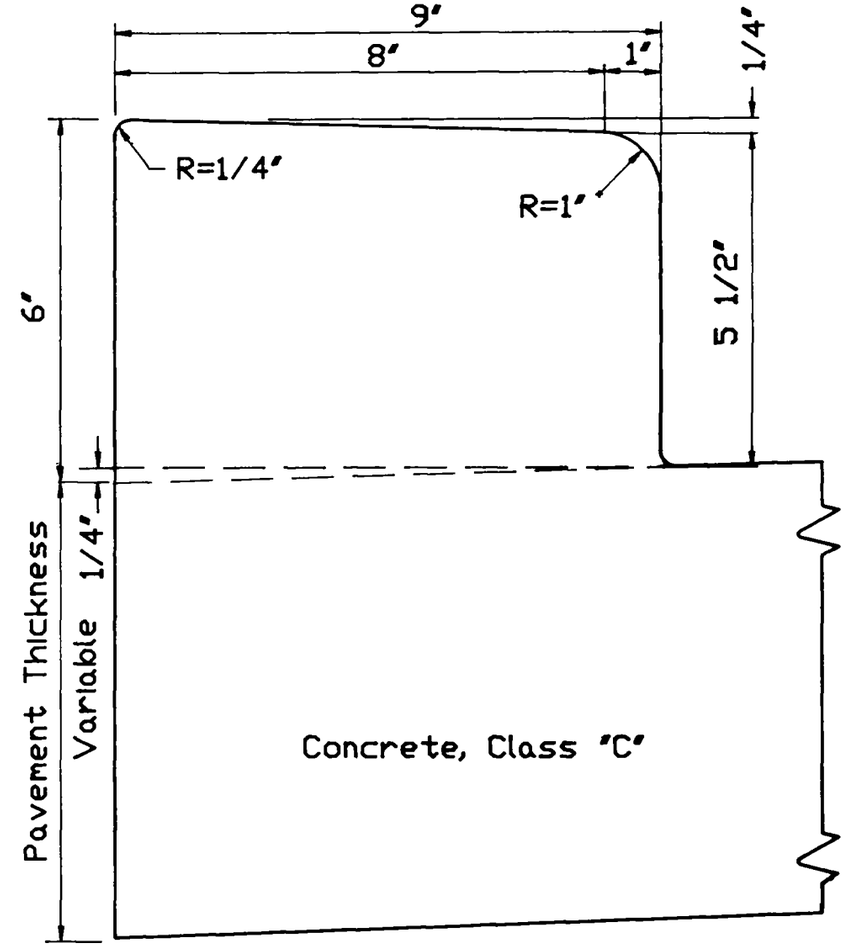

TYPE P-3
CIRCULAR

NOTE: The construction of Type P-2 and P-3 Curb shall apply only to radii less than One Hundred Feet (100') and shall not be used on larger radii curves.

CITY OF CINCINNATI
DEPARTMENT OF PUBLIC WORKS
DIVISION OF ENGINEERING

CONCRETE CURB INTEGRAL WITH CONCRETE PAVEMENT

SCALE: 3/8"= 1" FEB. , 1991

T.E. Young 4-3-91
CITY ENGINEER

ACC. NO. 21432

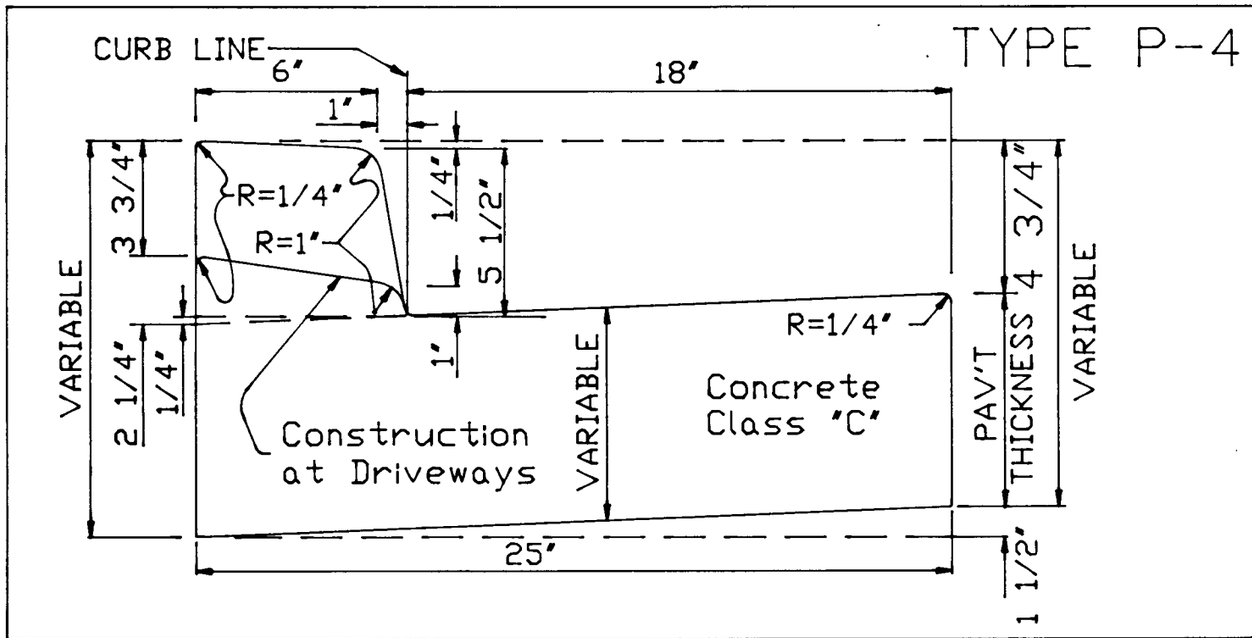

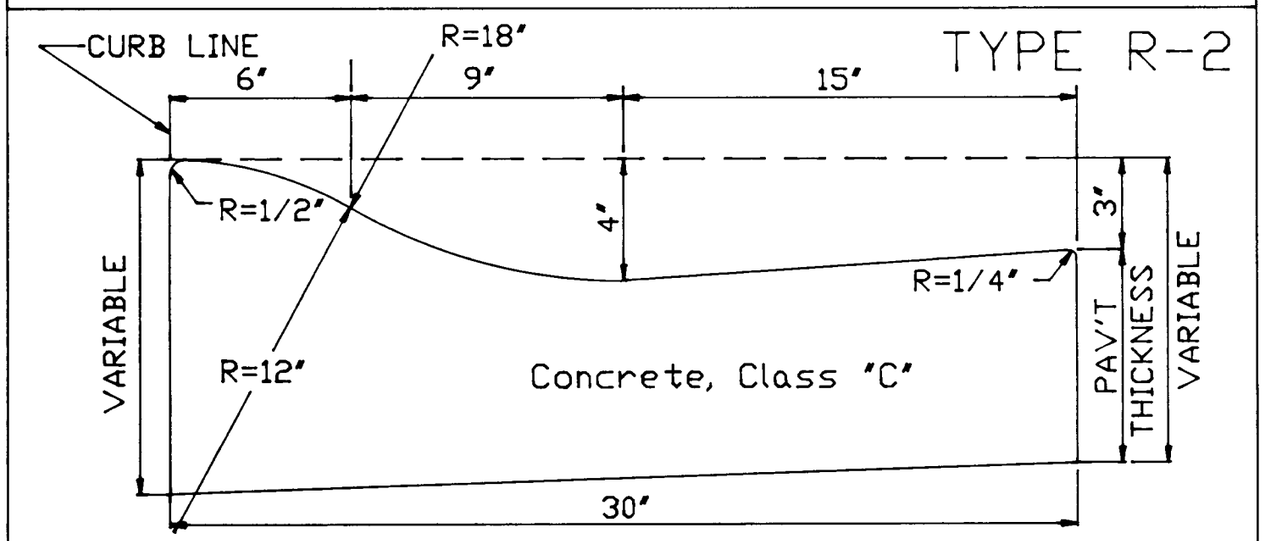

CITY OF CINCINNATI
DEPARTMENT OF PUBLIC WORKS
DIVISION OF ENGINEERING

STANDARD CONCRETE
COMBINED CURB & GUTTER

SCALE: 3/16"= 1"

MAY, 1995

CITY ENGINEER

ACC. NO. 21433

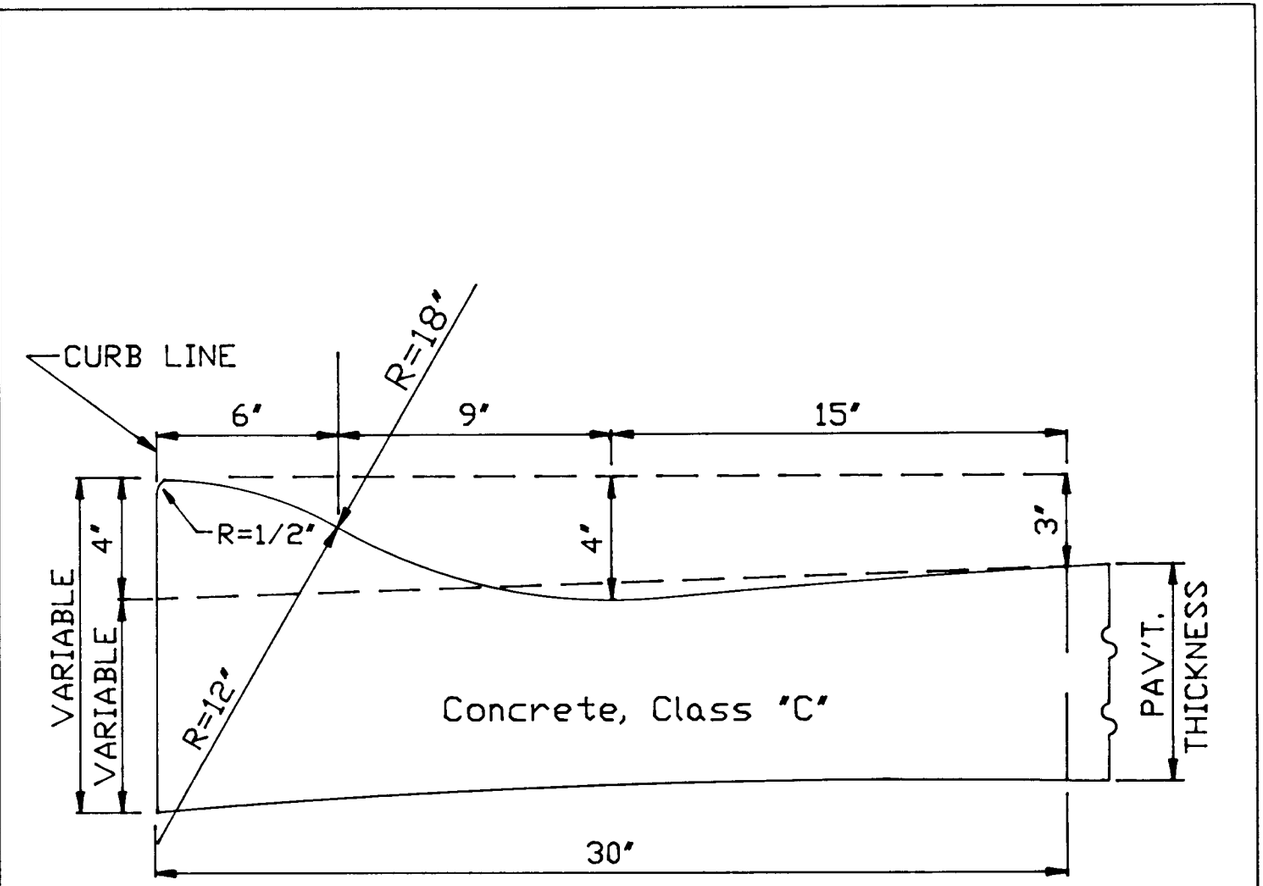

TYPE R-1

CITY OF CINCINNATI
DEPARTMENT OF PUBLIC WORKS
DIVISION OF ENGINEERING

STANDARD CONCRETE
ROLL CURB INTEGRAL WITH
CONCRETE PAVEMENT

SCALE: 3/16"= 1"

MAY, 1995

CITY ENGINEER

ACC. NO. 21434

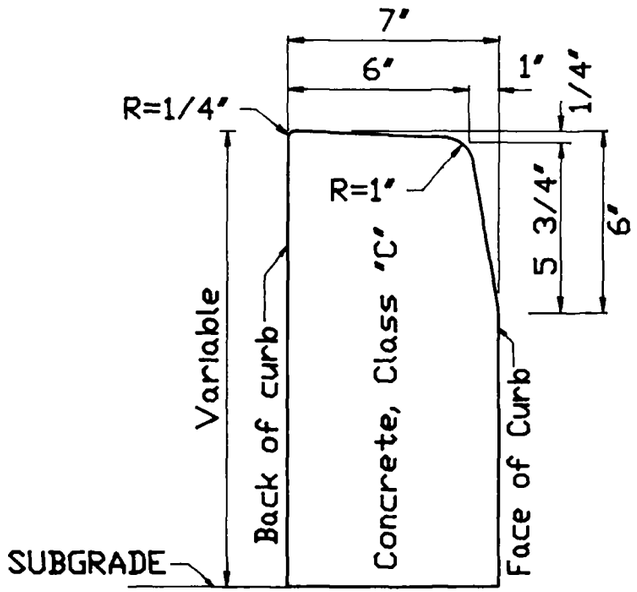

BATTERED
TYPE S-1

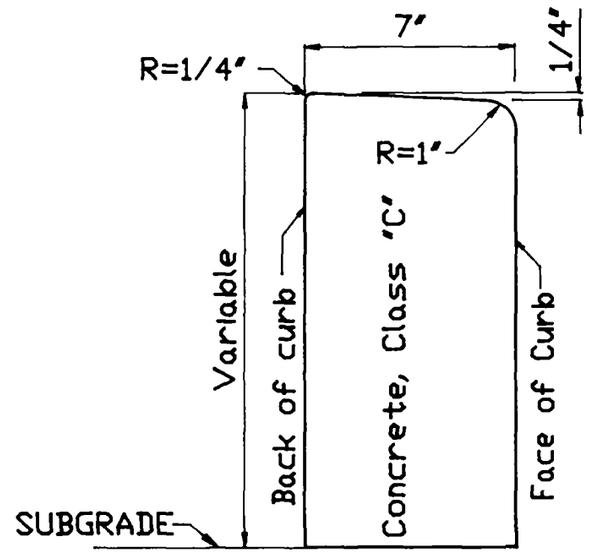

CIRCULAR
TYPE S-2

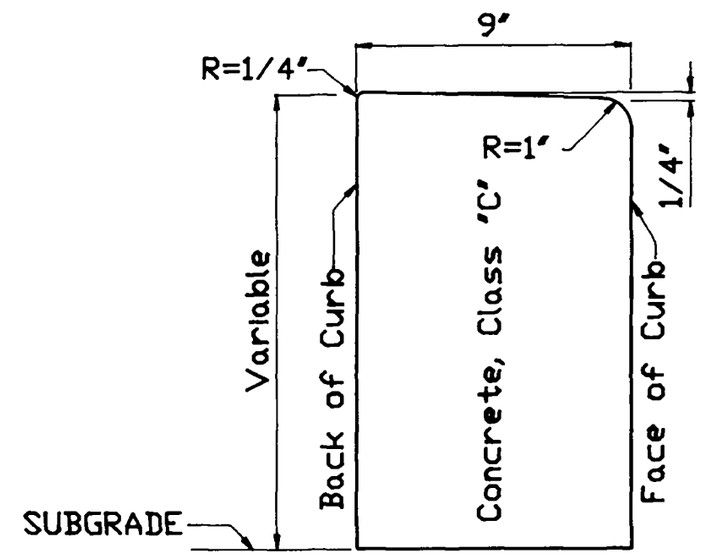

CIRCULAR
TYPE S-3

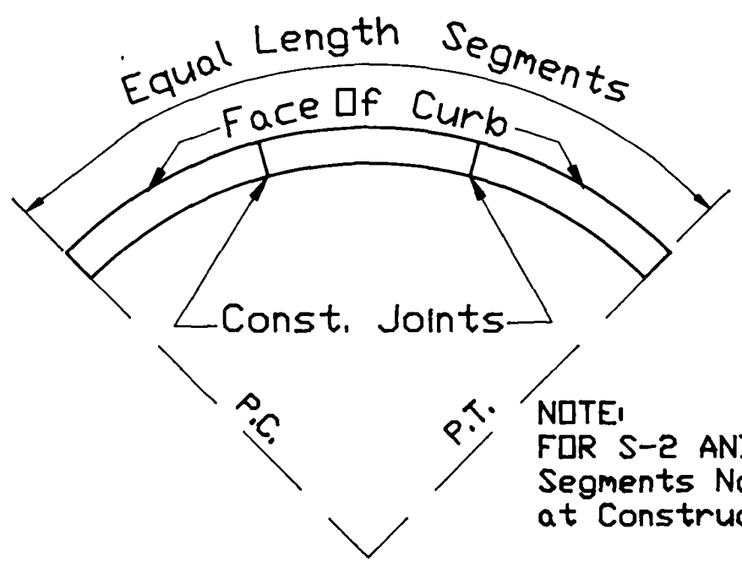

PLAN

NOTE:
FOR S-2 AND S-3 CURBS
Segments Not to be Bonded
at Construction Joints.

CITY OF CINCINNATI
DEPARTMENT OF PUBLIC WORKS
DIVISION OF ENGINEERING

STANDARD SEPARATE CONCRETE CURBS

SCALE: 3/16"= 1" FEBRUARY, 1991

APPROVED: T. Young 4-3-91
CITY ENGINEER

ACC. NO. 21435

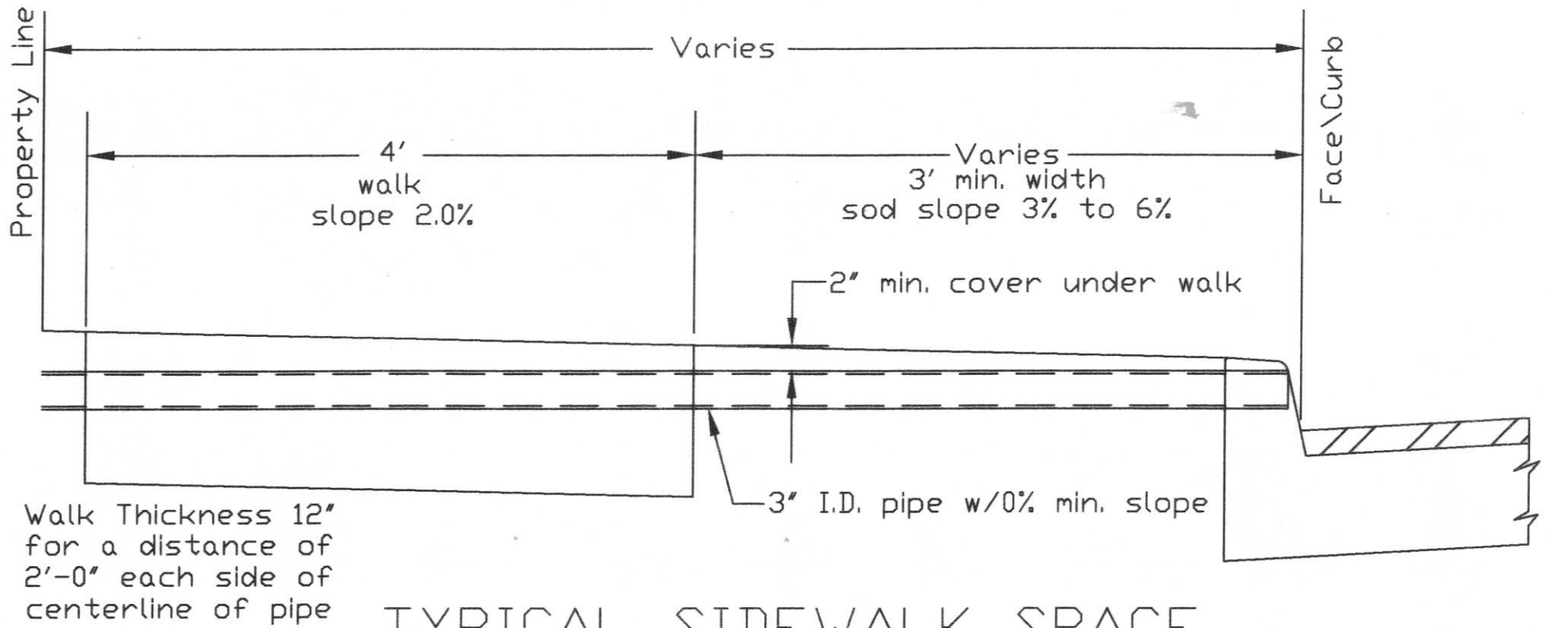

TYPICAL SIDEWALK SPACE

SCALE 1/2"=1'

NOTE :Downspout leader can be installed at time of construction with a 4" slot in curb.
After curb has been constructed, slot must be sawed.

Conduit material shall be cast iron.

Downspout Leader is to drain only Downspouts, and shall not be connected to any underground water source.

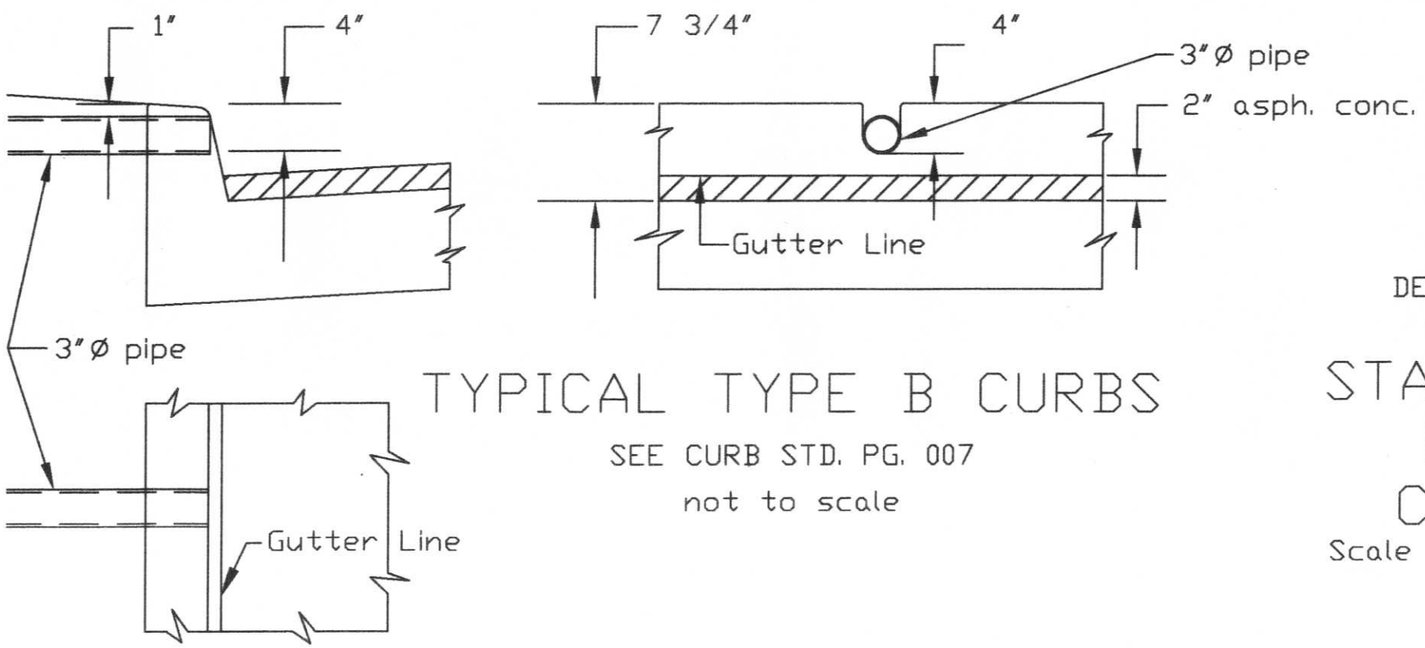

TYPICAL TYPE B CURBS

SEE CURB STD. PG. 007

not to scale

CITY OF CINCINNATI
DEPARTMENT OF TRANSPORTATION AND ENGINEERING
DIVISION OF ENGINEERING

STANDARD DOWNSPOUT LEADER OUTLETS FOR STANDARD CONCRETE CURB TYPE B's

Scale as noted

MAY, 1995
Rev. Sept., 2011

Gregory D Long
Acting CITY ENGINEER

ACC. NO. 20622

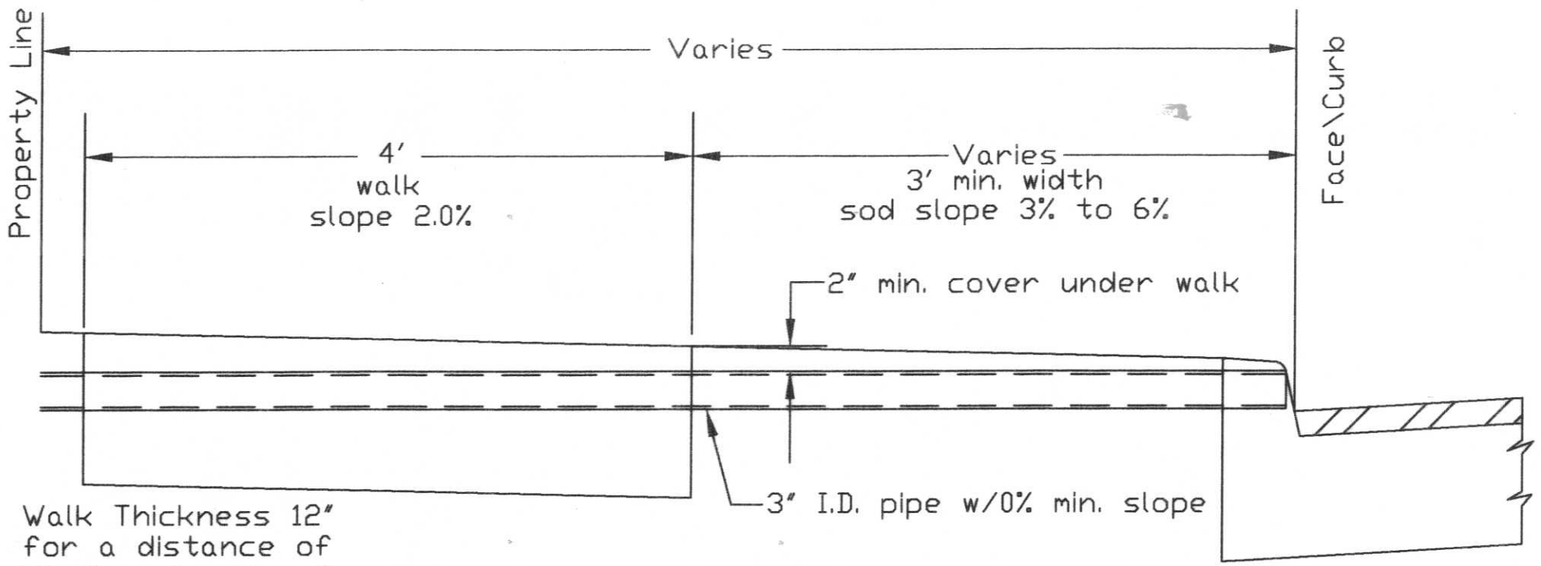

TYPICAL SIDEWALK SPACE

SCALE 1/2"=1'

NOTE :Downspout leader can be installed at time of construction with a 4" slot in curb.
After curb has been constructed, slot must be sawed.

Conduit material shall be cast iron.

Downspout Leader is to drain only Downspouts, and shall not be connected to any underground water source.

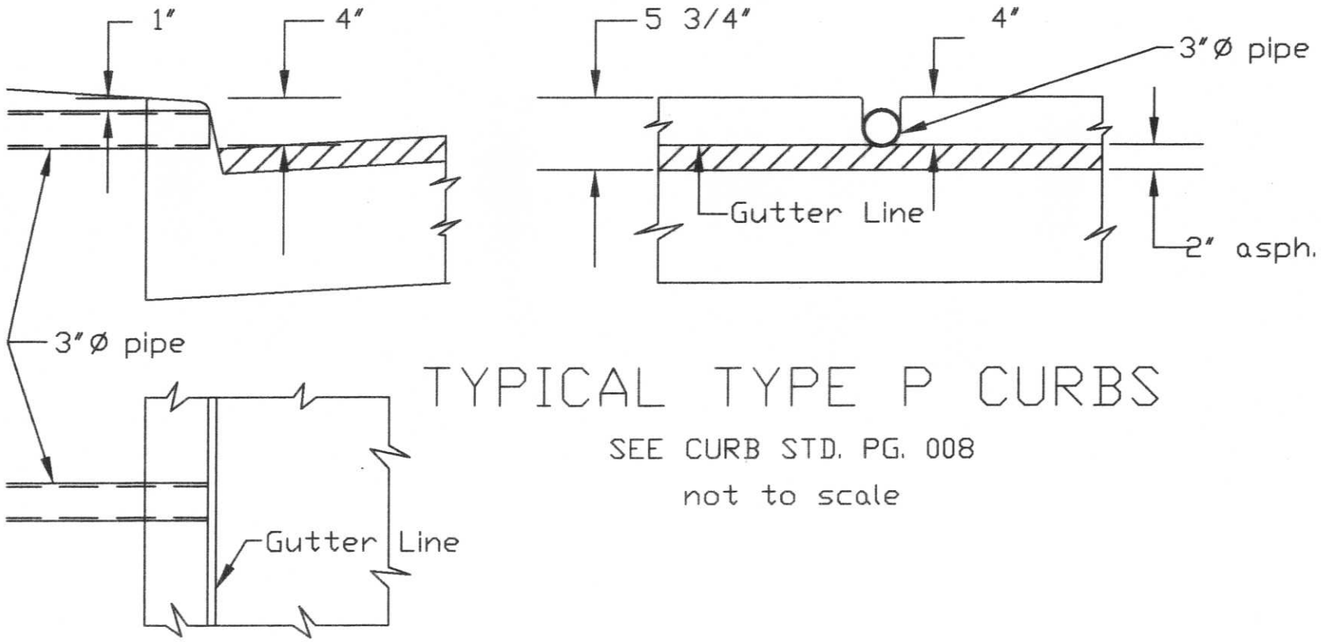

TYPICAL TYPE P CURBS

SEE CURB STD. PG. 008

not to scale

CITY OF CINCINNATI
DEPARTMENT OF TRANSPORTATION AND ENGINEERING
DIVISION OF ENGINEERING

STANDARD DOWNSPOUT LEADER OUTLETS FOR STANDARD CONCRETE CURB TYPE P's

Scale as noted

MAY, 1995
Rev. Sept., 2011

Gregory D. Long
Acting CITY ENGINEER

ACC. NO. 20622

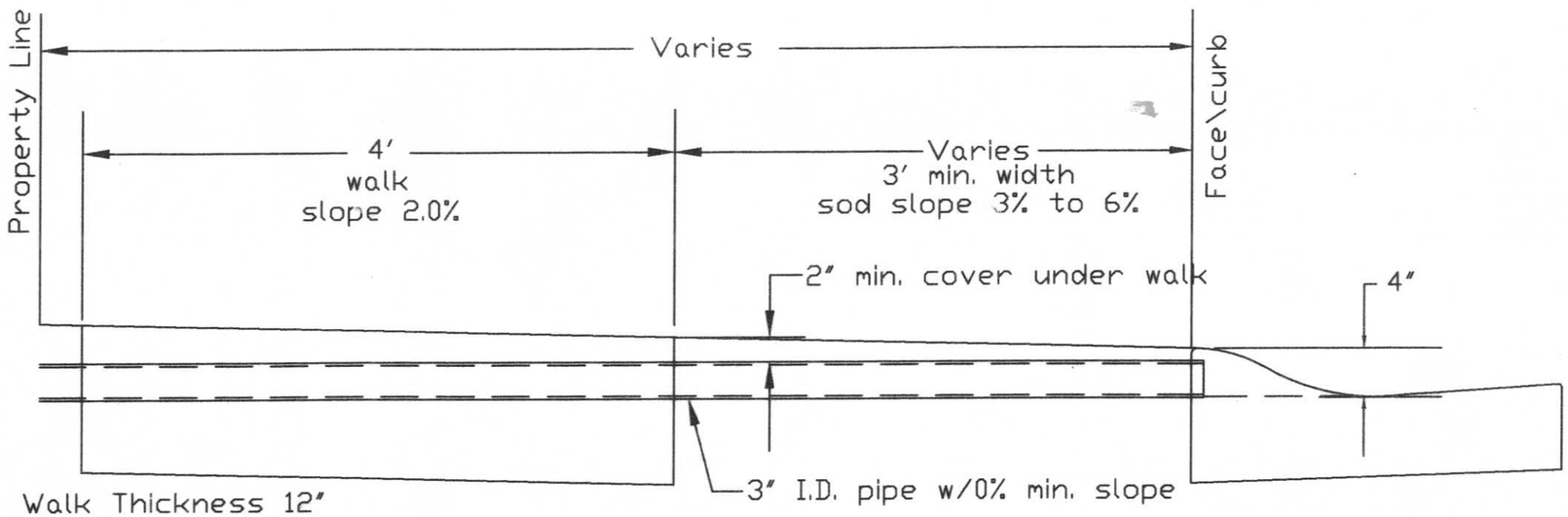

Walk Thickness 12" for a distance of 2'-0" each side of centerline of pipe

TYPICAL SIDEWALK SPACE

SCALE 1/2"=1'

NOTE :Downspout leader can be installed at time of construction with a 4" slot in curb. After curb has been constructed, slot must be sawed.

Conduit material shall be cast iron.

Downspout Leader is to drain only Downspouts, and shall not be connected to any underground water source.

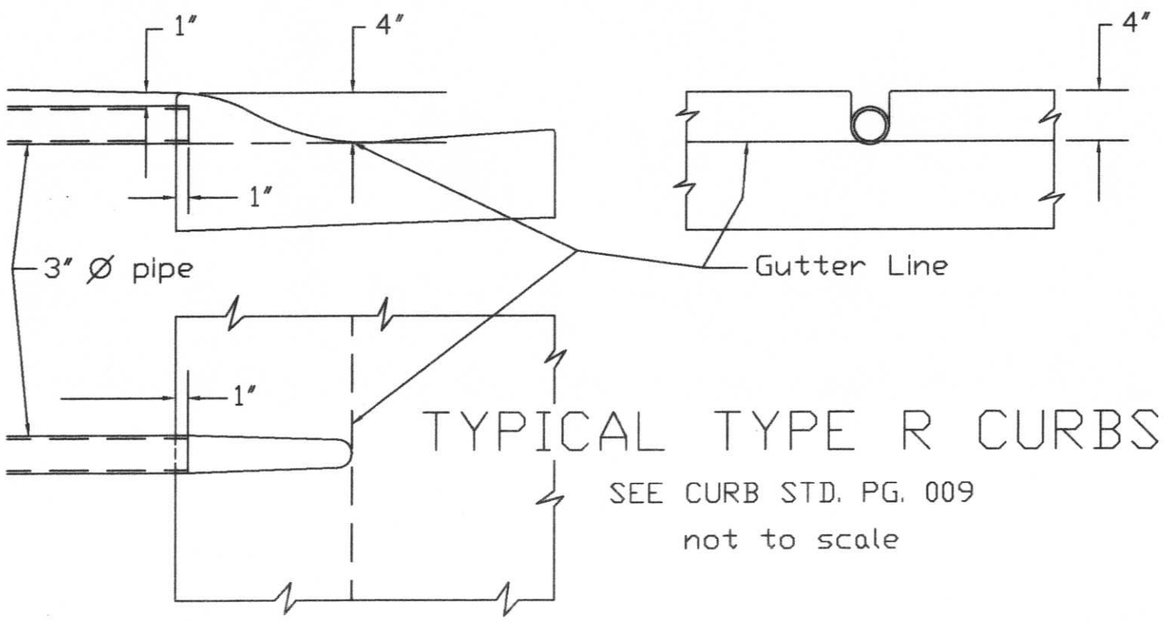

TYPICAL TYPE R CURBS

SEE CURB STD. PG. 009

not to scale

CITY OF CINCINNATI
DEPARTMENT OF TRANSPORTATION AND ENGINEERING
DIVISION OF ENGINEERING

STANDARD DOWNSPOUT LEADER OUTLETS FOR STANDARD CONCRETE CURB TYPE R's

Scale as noted

MAY, 1995
Rev. Sept., 2011

Gregory D. Long
Acting CITY ENGINEER

ACC. NO. 20622

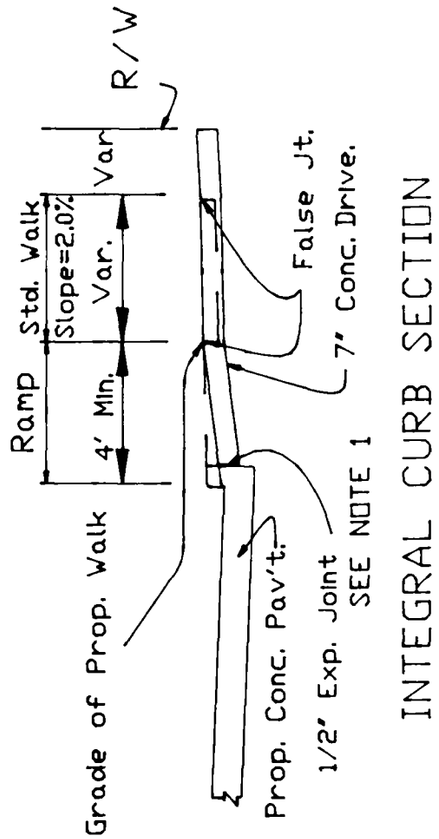

TYPICAL SECTION

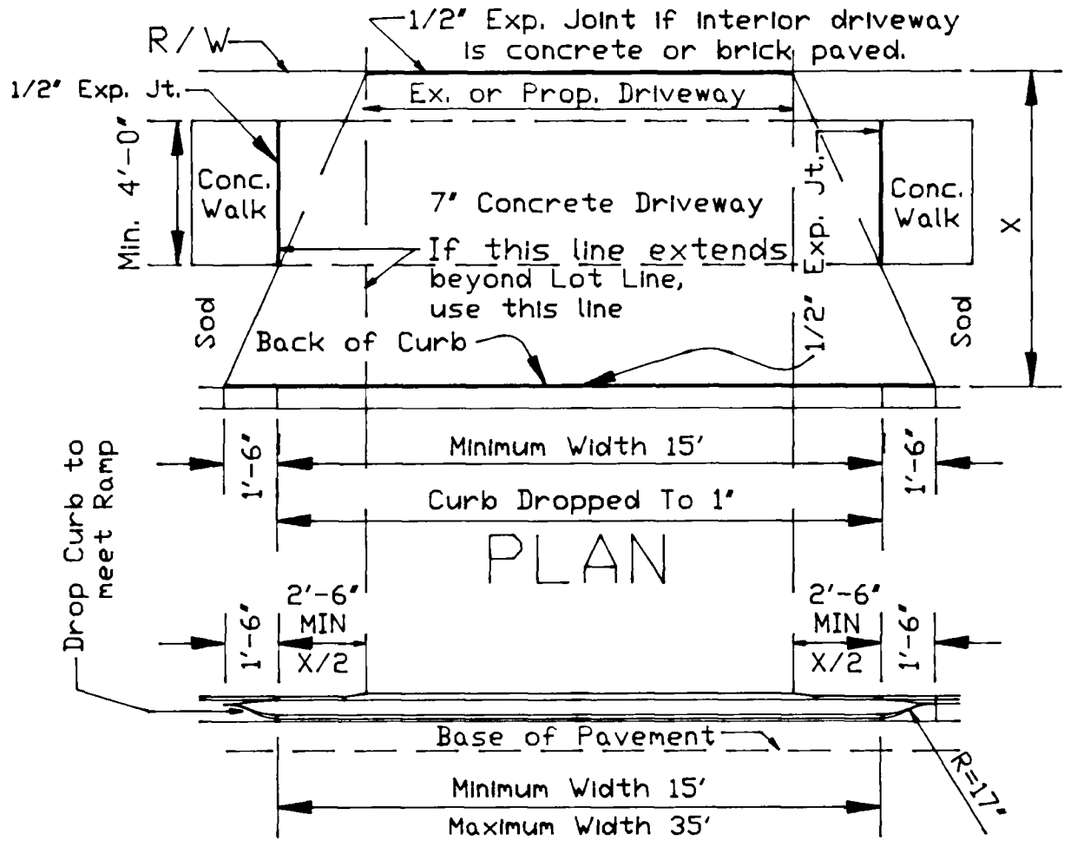

ELEVATION

NOTE:

① For Additional Driveway Drop Curb Details , See Standard Drawings for Type L-1 , B-1 , P-1 , P-4 and R-2 Concrete Curbs .

② Conc. Walk shall be removed to the nearest joint outside of the Proposed driveway. Install 1/2 inch Exp. joint against undisturbed concrete walk.

③ Dimensions may be modified to accommodate existing conditions at locations approved by , and to the satisfaction of , the City Engineer .

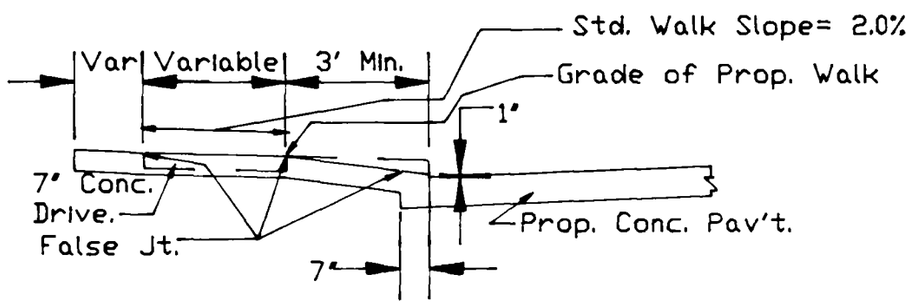

LUG CURB SECTION

CITY OF CINCINNATI
DEPARTMENT OF PUBLIC WORKS
DIVISION OF ENGINEERING

STANDARD RESIDENTIAL DRIVEWAY CONSTRUCTION

SCALE: NONE

MAY , 1995

CITY ENGINEER

Note:
This type of construction permitted only at locations approved by City Engineer.

ACC. NO. 21436

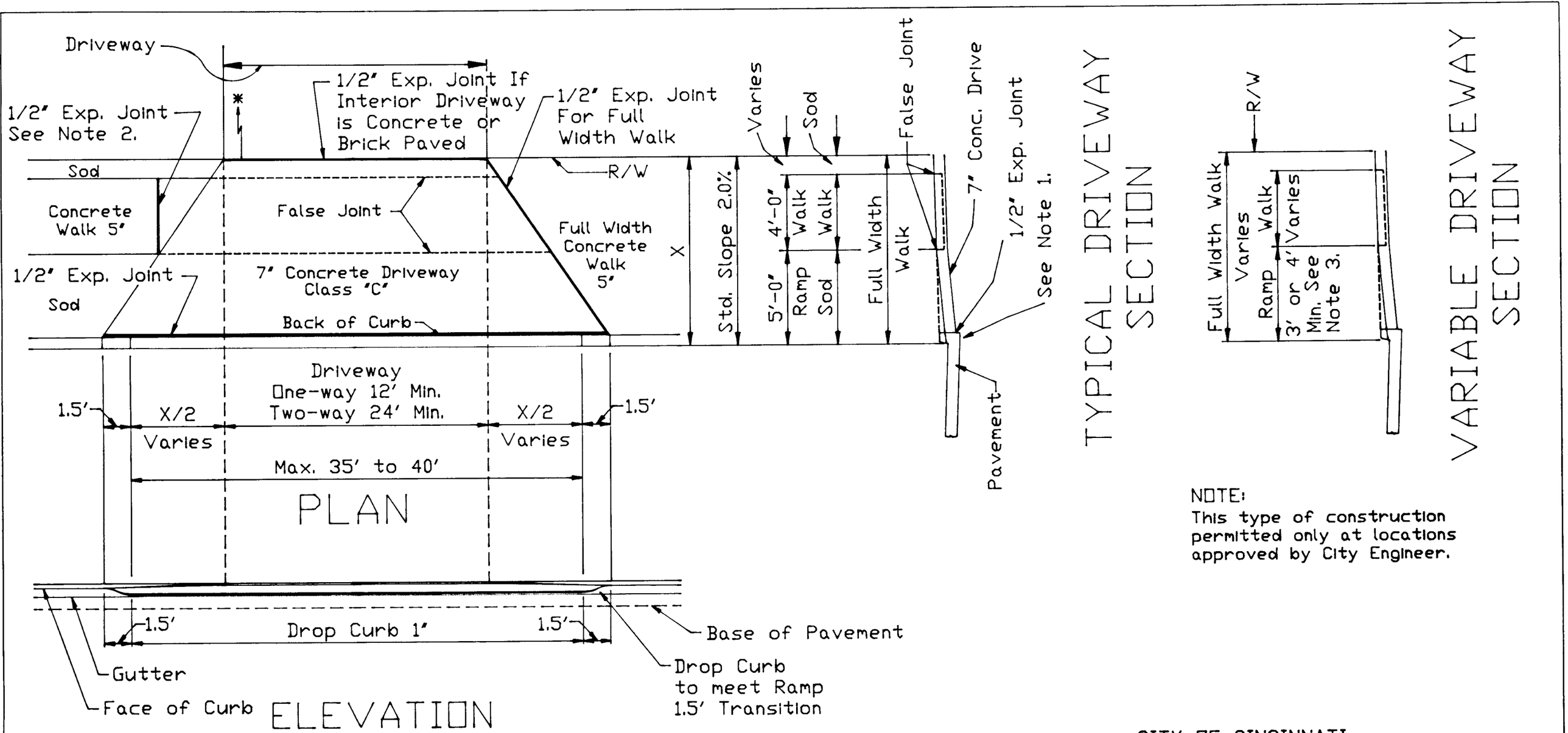

NOTE:
This type of construction permitted only at locations approved by City Engineer.

NOTE:

① For Additional Driveway Drop Curb Details See Standard Drawings Type L-1 , B-1 , P-1 , P-4 and R-2 Concrete Curbs .

② Conc. Walk shall be removed to the nearest joint outside of the Proposed driveway. Install 1/2 inch Exp. joint against undisturbed concrete walk.

③ Dimensions may be modified to accommodate existing conditions at locations approved by , and to the satisfaction of , the City Engineer .

* To be paved 25' behind Property line, as per CMC 721-134.

CITY OF CINCINNATI
DEPARTMENT OF PUBLIC WORKS
DIVISION OF ENGINEERING

STANDARD COMMERCIAL DRIVEWAY CONSTRUCTION

SCALE: NONE MAY. , 1995

CITY ENGINEER

ACC. NO. 21516

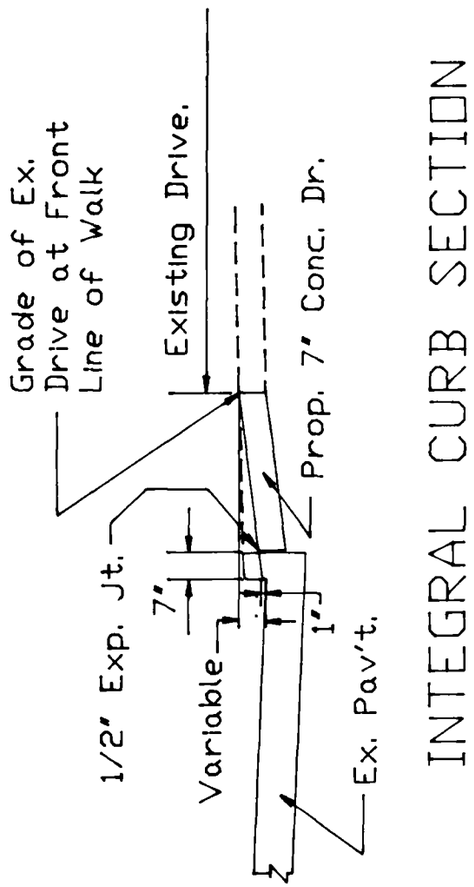

INTEGRAL CURB SECTION

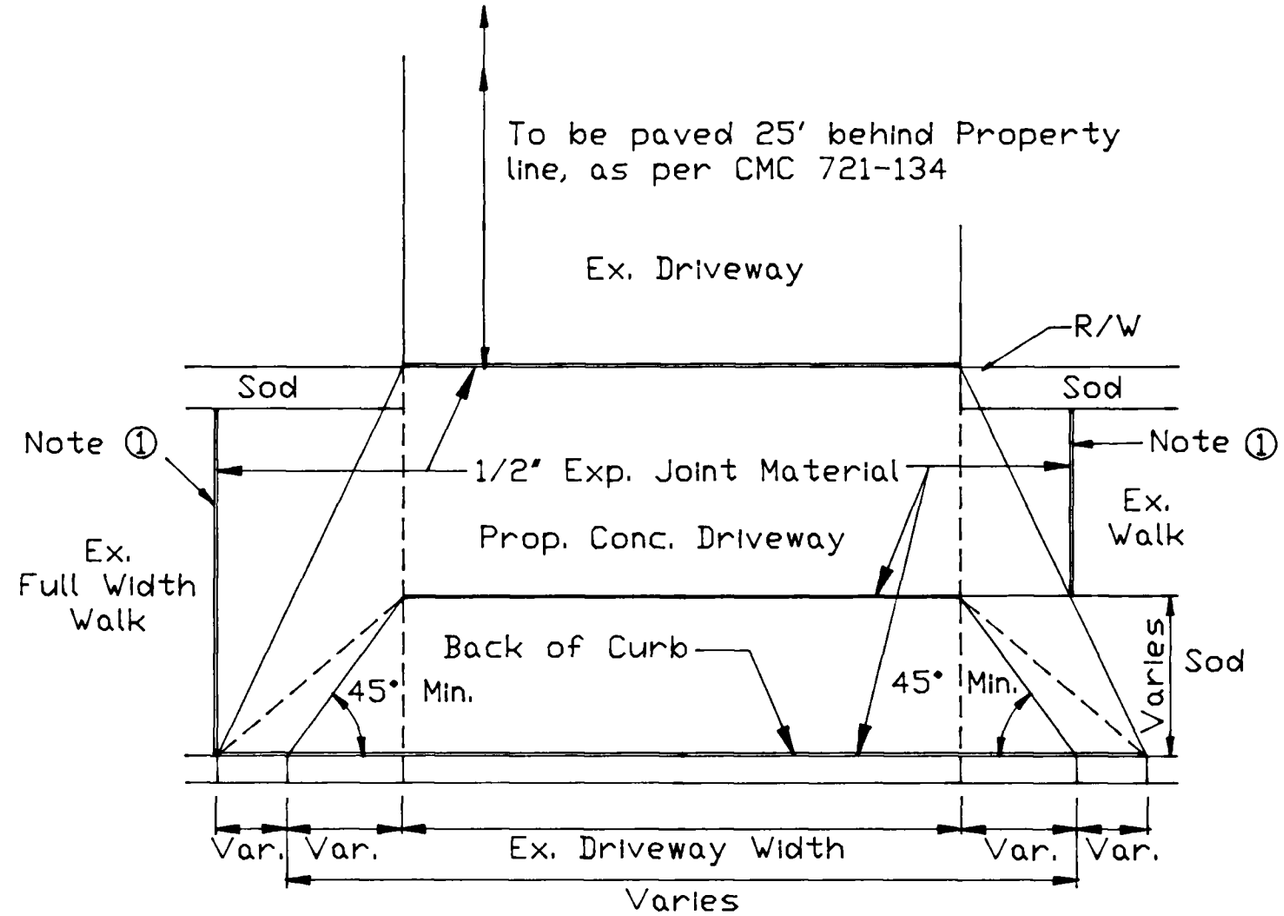

PLAN

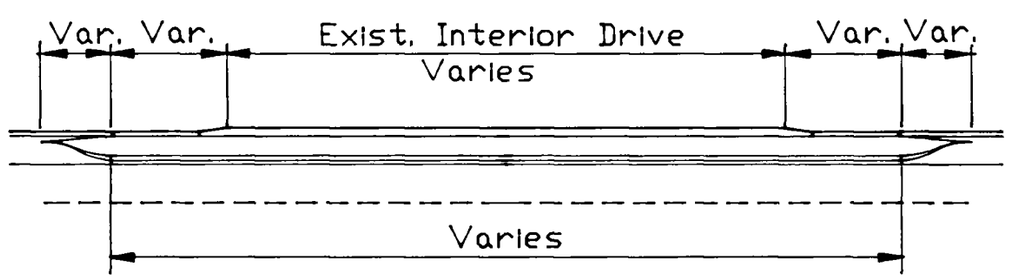

ELEVATION

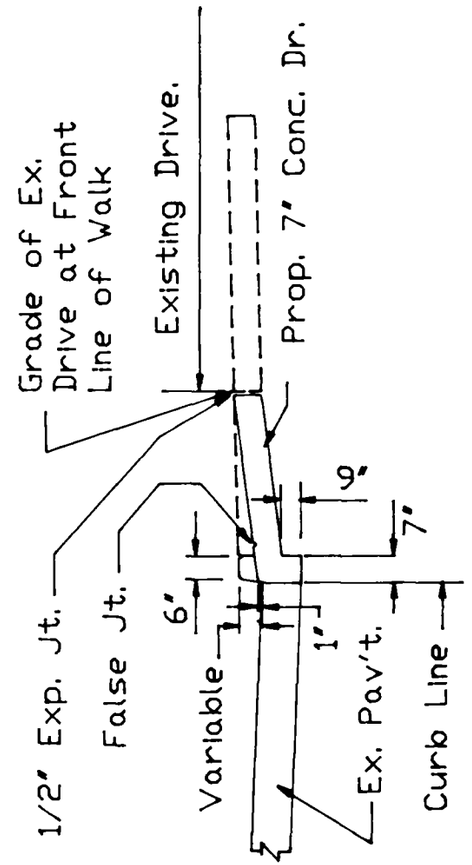

LUG CURB SECTION

NOTE:

① Conc. Walk to be removed to the nearest joint outside of the Proposed driveway. Install 1/2 inch Exp. joint against undisturbed concrete walk.

② Requirements may be modified to accommodate existing conditions at locations approved by the City Engineer.

③ For Additional Driveway Drop Curb Details See L-1, B-1, P-1, P-4 and R-2.

CITY OF CINCINNATI
DEPARTMENT OF PUBLIC WORKS
DIVISION OF ENGINEERING

STANDARD DRIVEWAY RECONSTRUCTION

SCALE : 3/16"= 1'-0"

May , 1995

CITY ENGINEER

ACC. NO. 21508

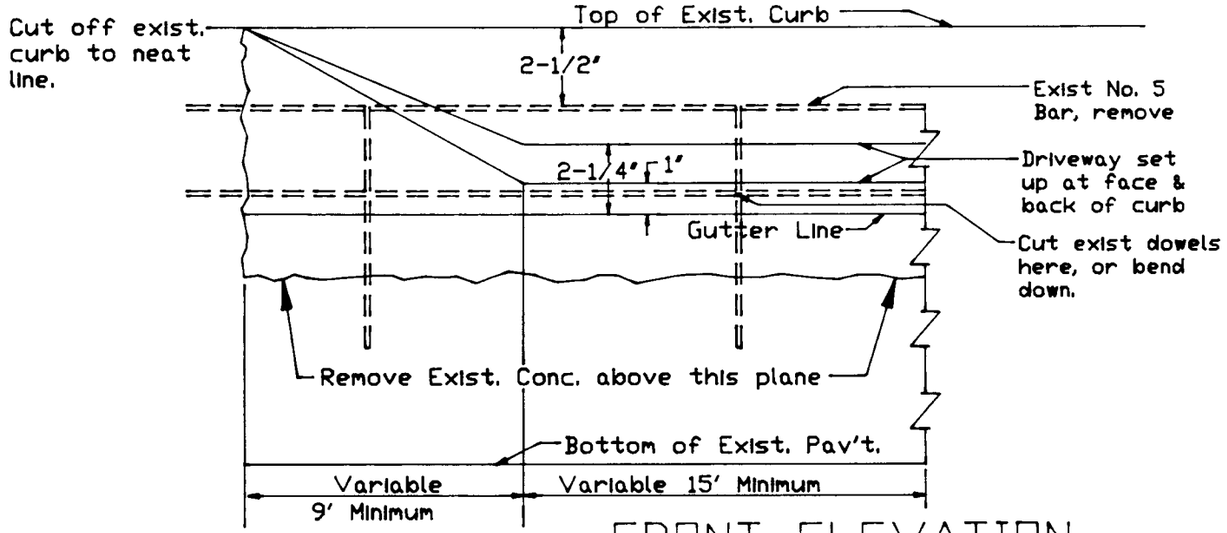

FRONT ELEVATION

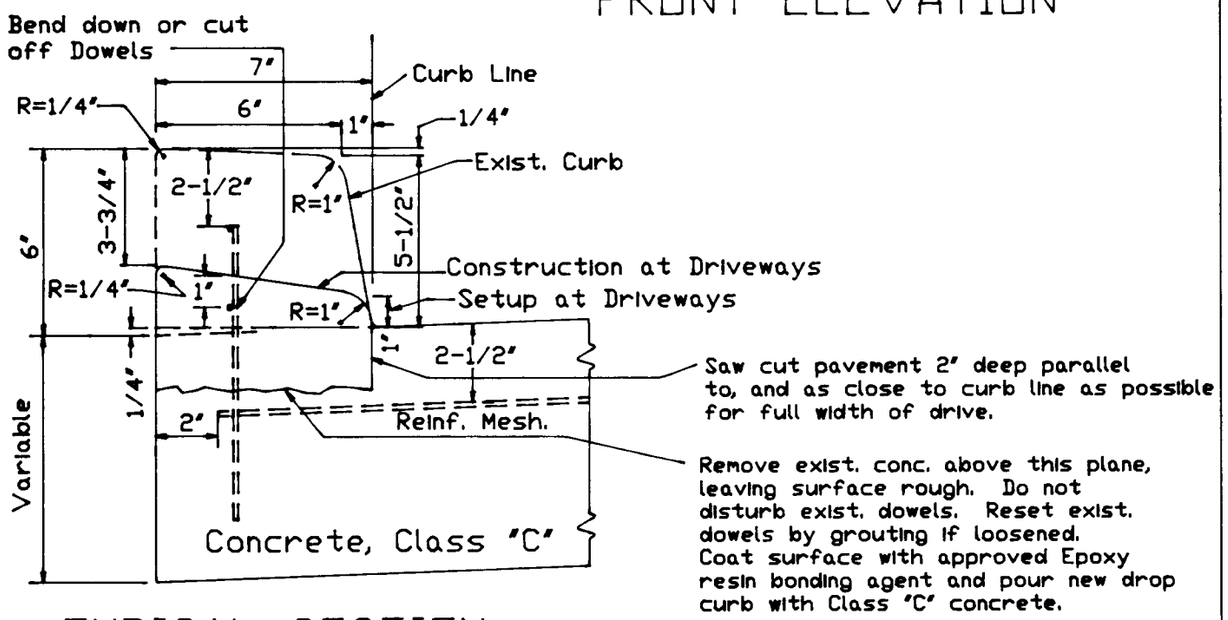

TYPICAL SECTION

CITY OF CINCINNATI
DEPARTMENT OF PUBLIC WORKS
DIVISION OF ENGINEERING

REPLACING INTEGRAL CURB WITH DROP CURB AT DRIVEWAYS

SCALE: NONE FEBRUARY , 1991

CITY ENGINEER

ACC. NO. 21509

NOTE : SECTION 721-143 OF THE CINCINNATI MUNICIPAL CODE PROVIDES THAT ON UNIMPROVED STREETS THE GRADE OF THE DRIVEWAY AT THE PROPERTY LINE SHALL BE DETERMINED BY ASCENDING FROM THE EDGE OF THE TRAVELED ROADWAY AT THE RATE OF 1/2" PER FOOT.

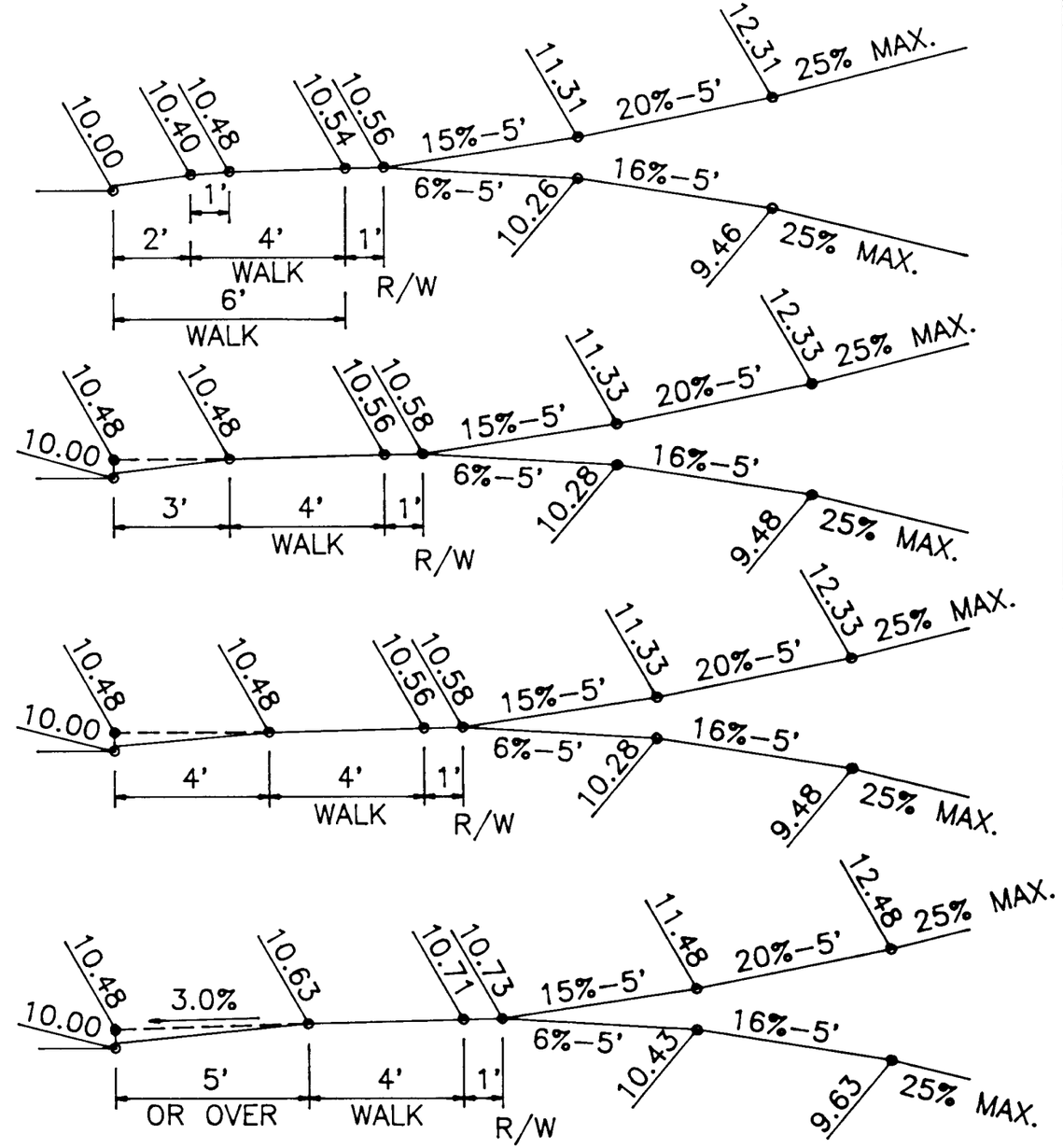

CITY OF CINCINNATI
DEPARTMENT OF PUBLIC WORKS
DIVISION OF ENGINEERING

MAXIMUM ASCENDING & DESCENDING

INTERIOR DRIVEWAY GRADES

FOR VARIOUS SIDEWALK LOCATIONS

NOTE: R/W= RIGHT OF WAY

NOT TO SCALE MAY, 1995

CITY ENGINEER

ACC. NO. 21439

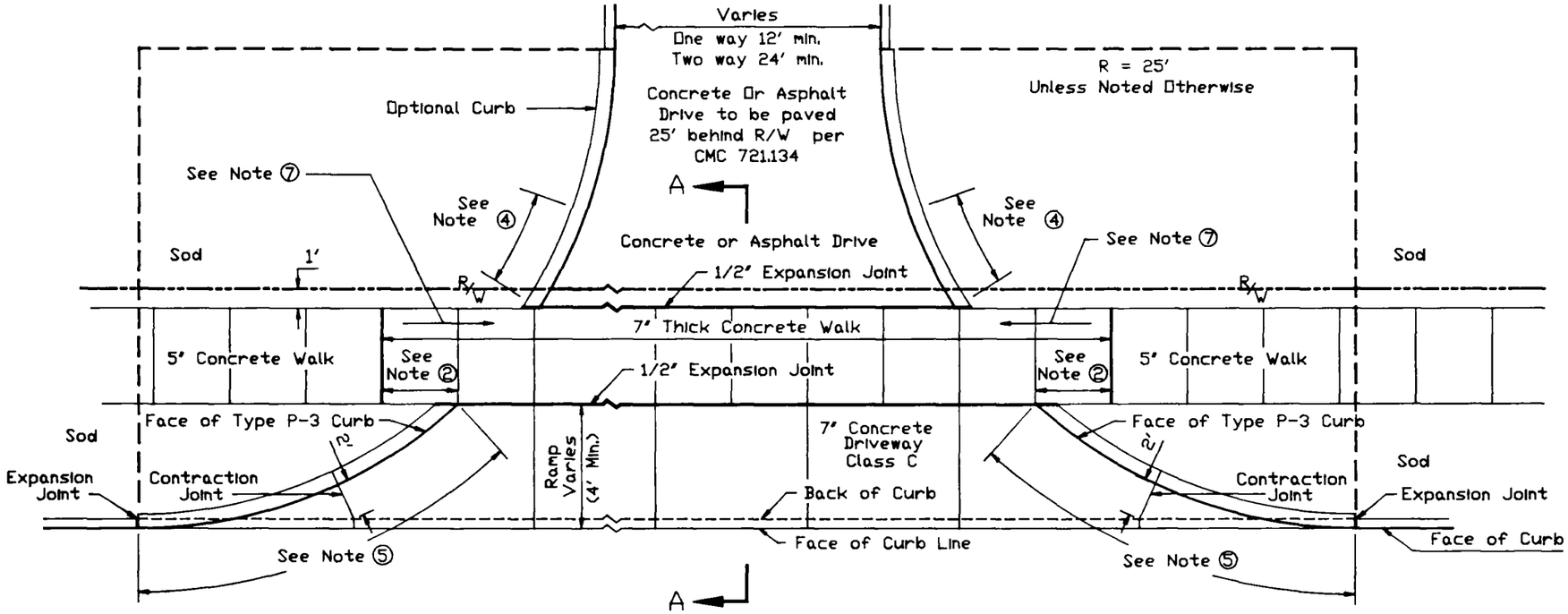

PLAN

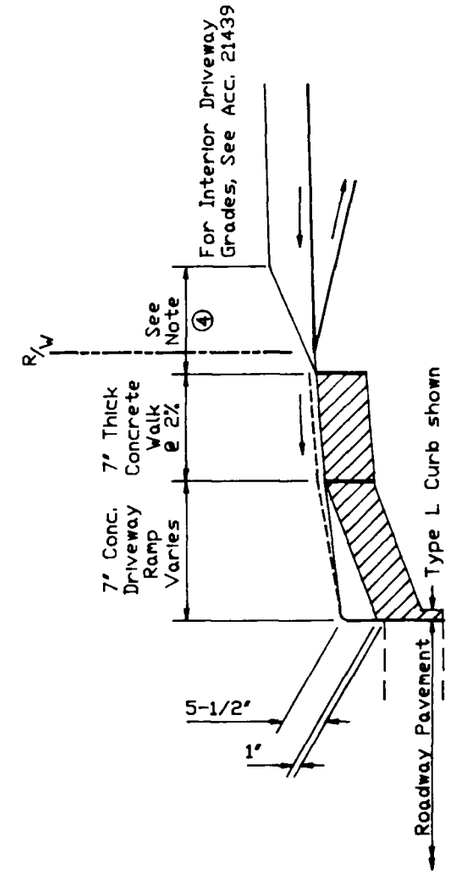

SECTION A-A

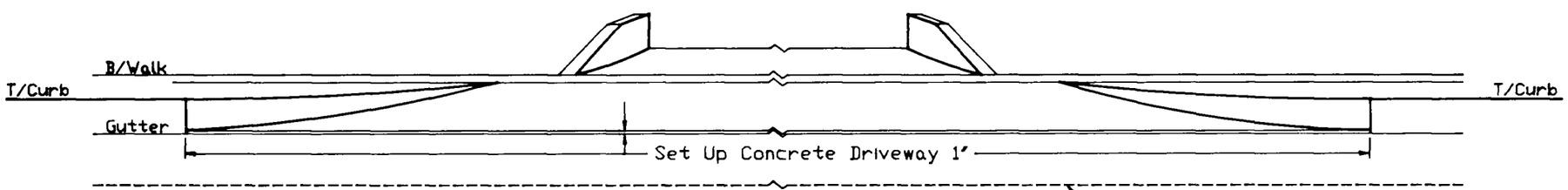

ELEVATION

NOTE:

① For Additional Driveway Drop Curb Details, See Standard Drawings for Types L-1, B-1, P-1, P-3, P-4, and R-2 Concrete Curbs.

② Conc. Walk to be removed to the nearest joint outside of the Proposed driveway. Install 1/2 inch Exp. joint against undisturbed concrete walk.

③ Requirements may be modified to accommodate existing conditions at locations approved by the City Engineer.

④ Taper curb height from 5 1/2" to 0" in 5'.

⑤ Taper curb height continuously from 4 1/2" to 0"

⑥ **This type of construction permitted only at locations approved by the City Engineer.**

⑦ Typically, the sidewalk grade is maintained throughout the driveway. Where the sidewalk is depressed for the driveway ramp, the sidewalk shall be sloped down at 1/4" per foot (max).

CITY OF CINCINNATI
DEPARTMENT OF PUBLIC WORKS
DIVISION OF ENGINEERING

MODIFIED COMMERCIAL DRIVEWAY CONSTRUCTION

SCALE: NONE June, 1995

CITY ENGINEER

ACC. NO. 22855

[6] c:\files\3accn\22855.dwg

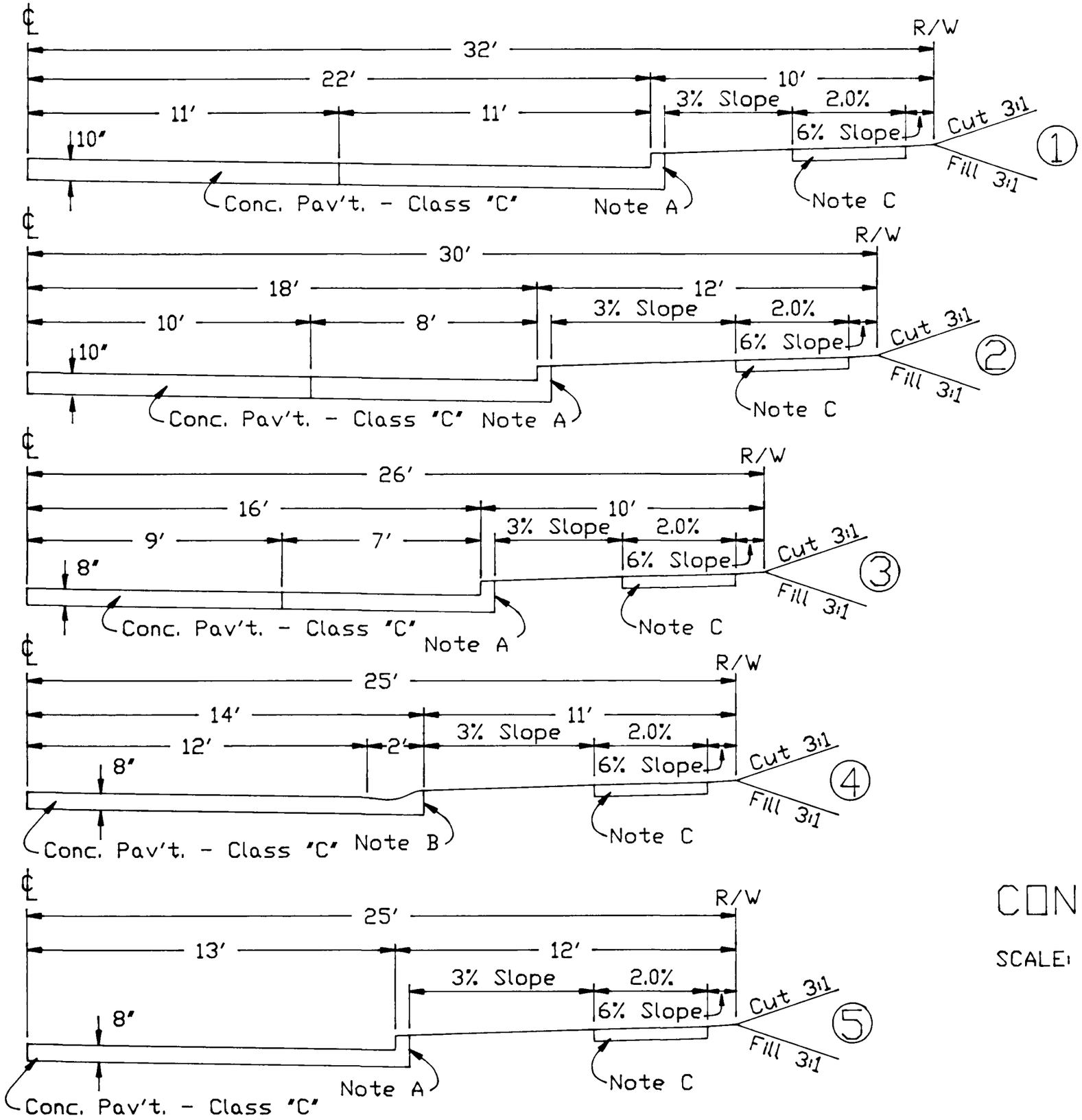

① 44 FT. ROADWAY
② 36 FT. ROADWAY
③ 32 FT. ROADWAY
④ 28 FT. ROADWAY
⑤ 26 FT. ROADWAY

FOR TRANSVERSE AND LONGITUDINAL JOINT SPECIFICATIONS, SEE STATE OF OHIO STANDARD CONSTRUCTION DRAWINGS BP-2.1 AND BP-2.2

NOTE A CONCRETE CURB, TYPE P-1
NOTE B CONCRETE CURB, TYPE R-1
NOTE C CONCRETE WALK, 5′ CLASS "C"

CITY OF CINCINNATI
DEPARTMENT OF PUBLIC WORKS
DIVISION OF ENGINEERING

STANDARD CONCRETE ROADWAY SECTIONS

SCALE: 1/4″ = 1′-0″

MAY ,1995

CITY ENGINEER

ACC. NO. 21437

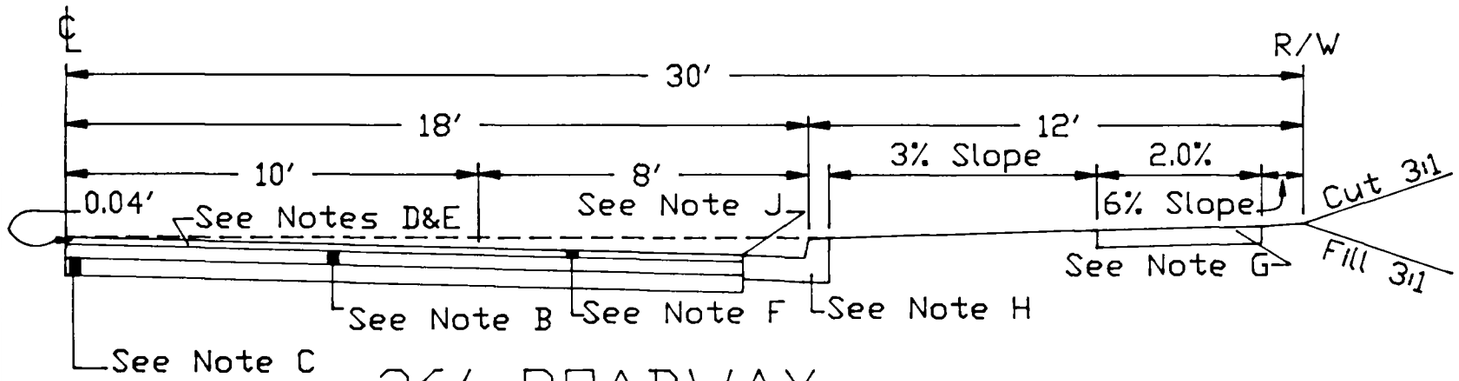

36' ROADWAY

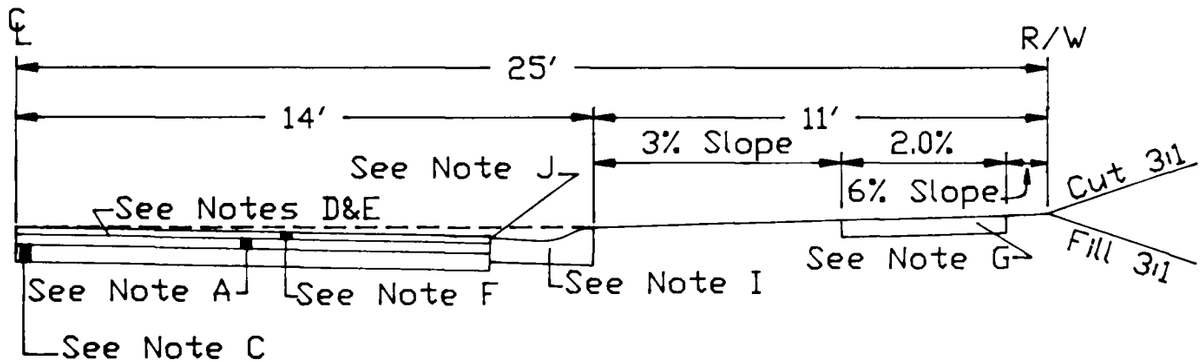

28' ROADWAY

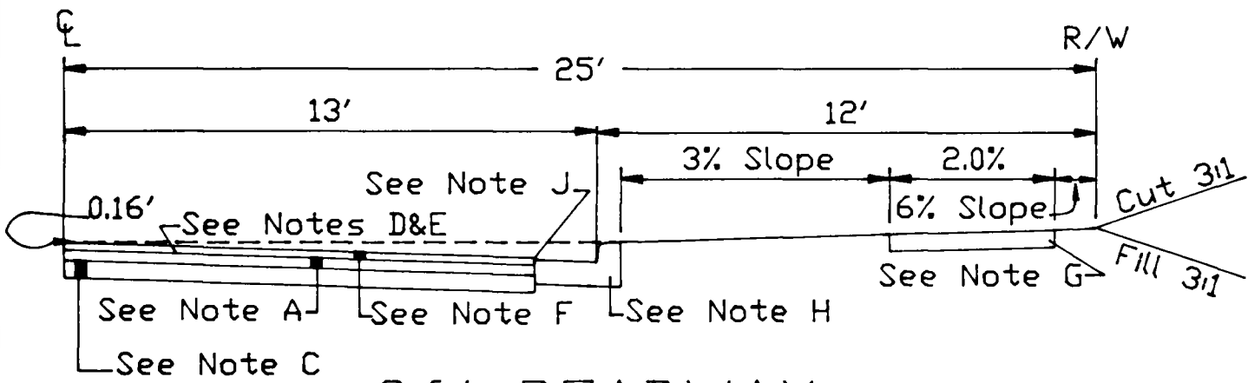

26' ROADWAY

Design for California Bearing Ratio 5.0
Minimum Design

NOTE A - 3" 301 Base Course
NOTE B - 5" 301 Base Course
NOTE C - 5" 301 Base Course
NOTE D - Base to be sealed with .3 Gal. per sq. yd. of R.C. 250 and a 12 lb. per sq. yd. sand cover is provided.
NOTE E - 407 Bituminous Tack Coat.*
NOTE F - 2" 404 Wearing Course.*
NOTE G - 5" One course conc. walk- class "C"
NOTE H - Conc. combined curb and gutter- See Acc. No. 21433 Type P-4
NOTE I - Conc. combined curb and gutter - See Acc. No. 21433 Type R-2
NOTE J - Surface of 404, 1/2" above Gutter Plate

* Do not apply for nine months after the 301 base course on all subdivision streets and where all other circumstances permit.

CITY OF CINCINNATI
DEPARTMENT OF PUBLIC WORKS
DIVISION OF ENGINEERING

STANDARD LOCAL STREET FULL DEPTH ASPHALT ROADWAY SECTIONS

SCALE: NONE

MAY ,1995

CITY ENGINEER

ACC. NO. 21510

NOTE:(Between Intersections).
1" Transverse expansion joints to be spaced as directed.
Intermediate tranverse false joints to be spaced 15 ft. apart.

For Joint Specifications, see State of Ohio Standard Construction Drawings BP-2.1,2.2,2.3 and 2.4

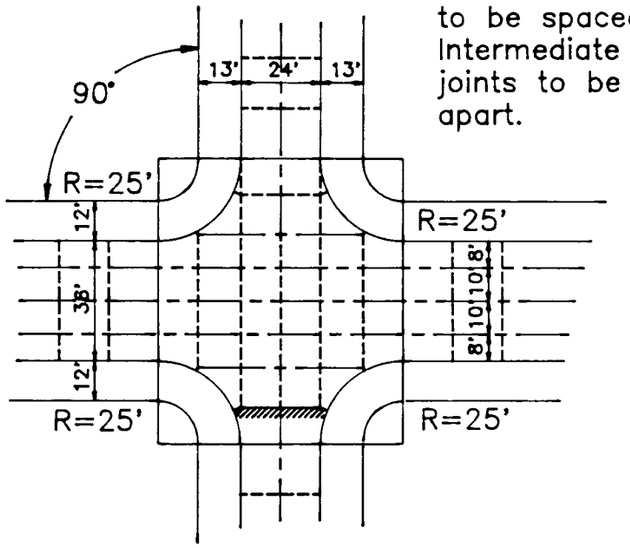

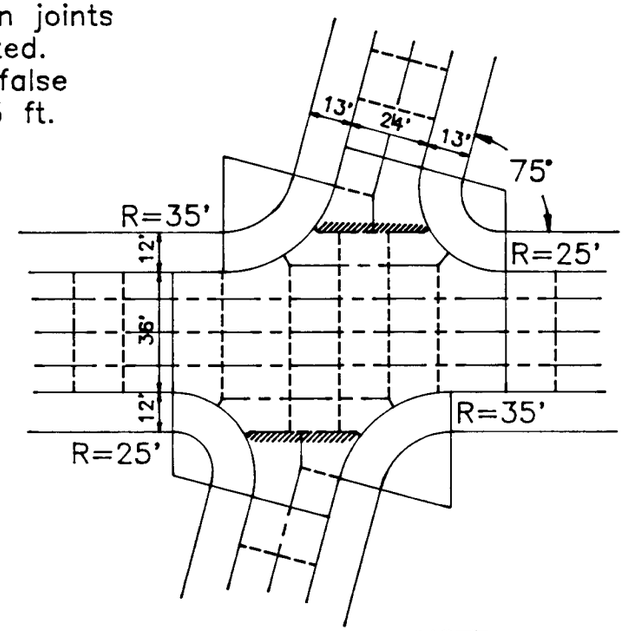

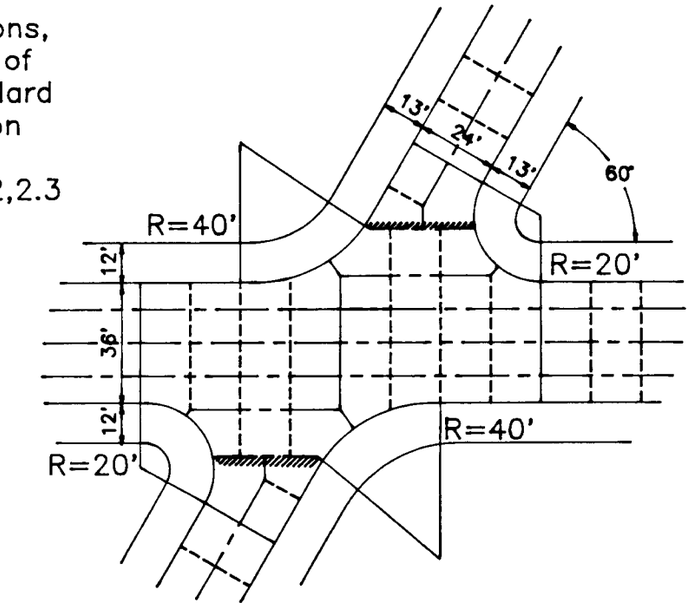

NOTE:
Acute angles should be avoided in laying out joints in all intersections.

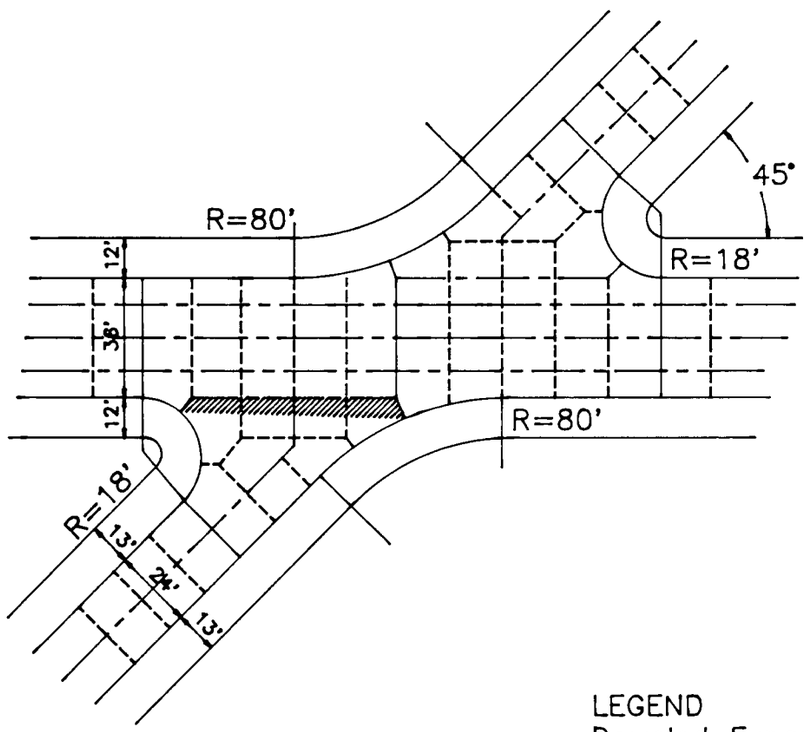

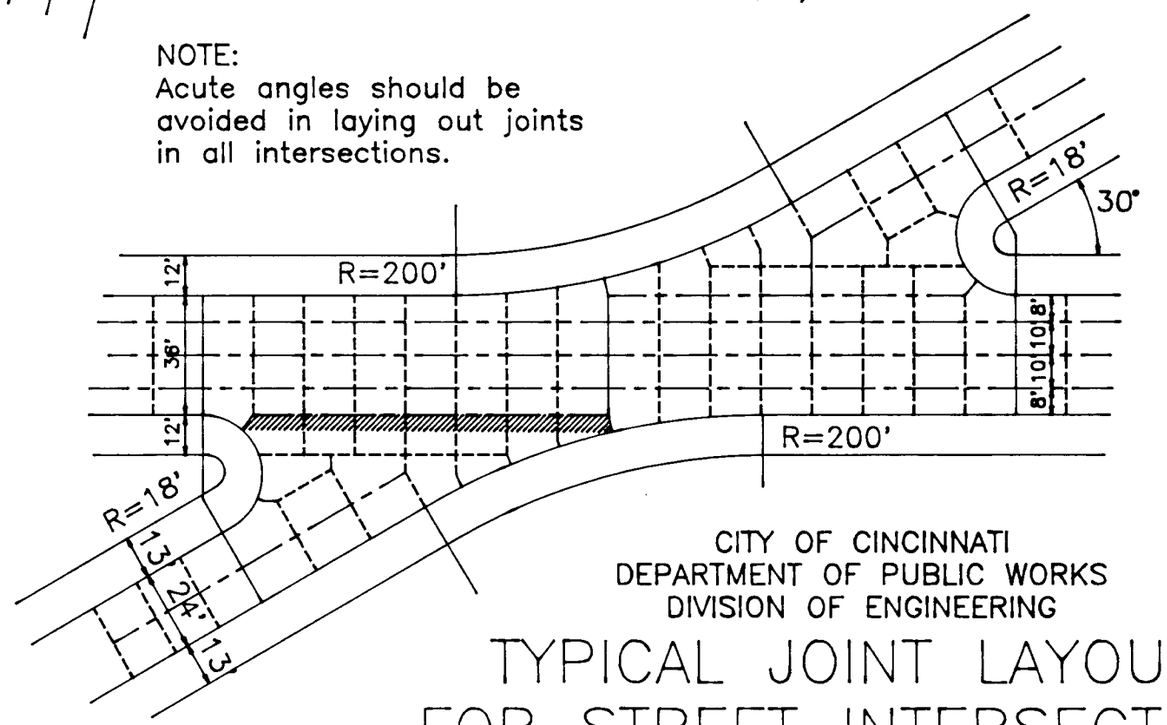

LEGEND
- Doweled Expansion Joint
- Doweled Construction Joint
- False Joint
- Limit of Improvement

CITY OF CINCINNATI
DEPARTMENT OF PUBLIC WORKS
DIVISION OF ENGINEERING

TYPICAL JOINT LAYOUTS FOR STREET INTERSECTIONS

SCALE 1"=50' MAY , 1995

CITY ENGINEER

ACC. NO. 21505

STANDARD RESTORATION
BLOCK PAVED STREETS

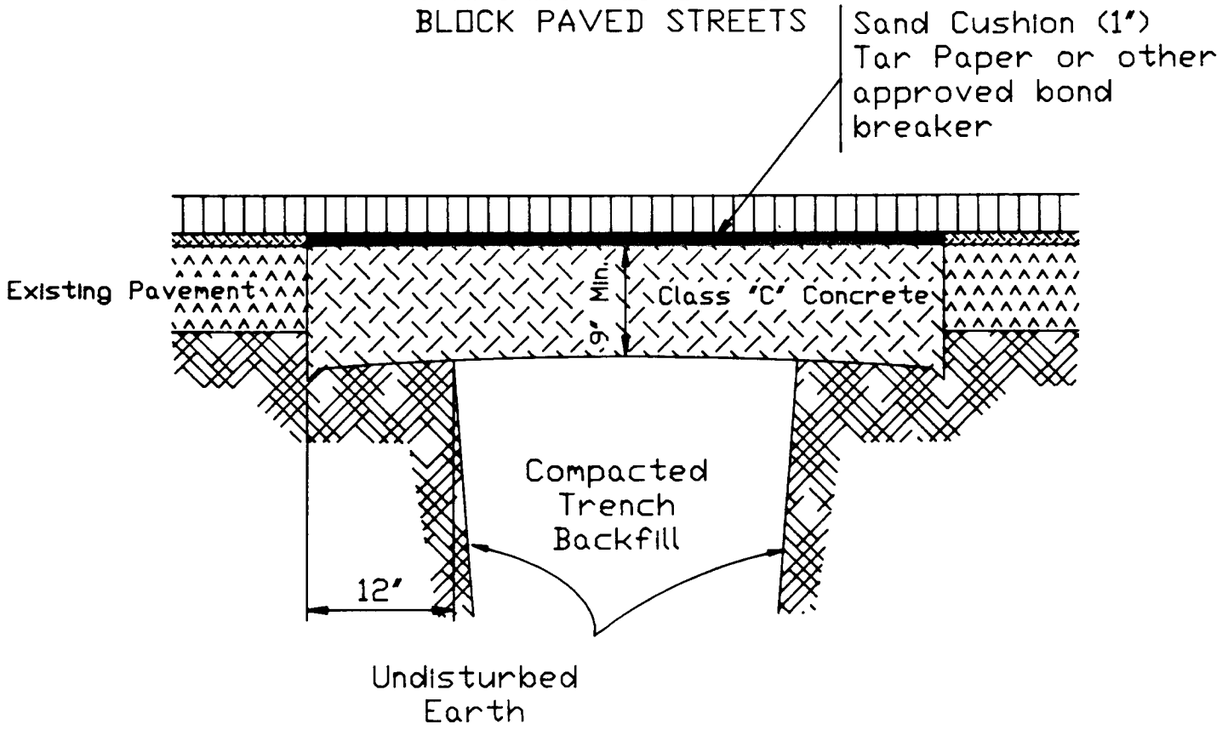

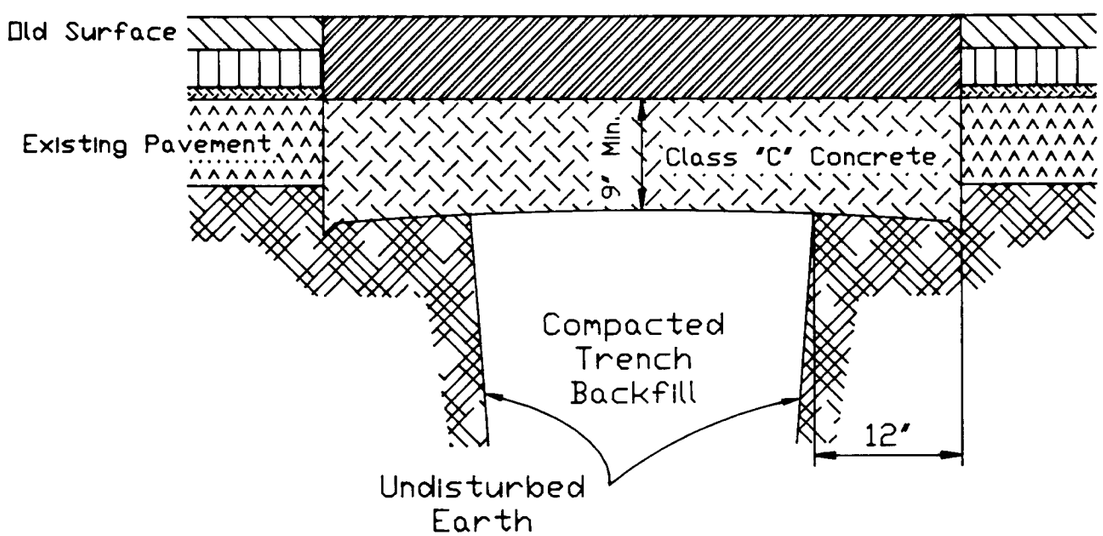

2 inches of 404 asphalt shall be compacted with 3 to 5 ton roller, 8 to 10 ton or equivalent vibratory compactor for longitudinal cuts.

Concrete shall be consolidated with internal type vibrator.

Bond breaker shall be sand cushion (1"), tar paper or approved medium.

Edges of restoration shall be sealed with asphalt cement meeting the requirements of Item 702.1 of the Ohio Department of Transportation Construction and Materials Specifications.

STANDARD RESTORATION
ASPHALT SURFACE ON CONCRETE BASE

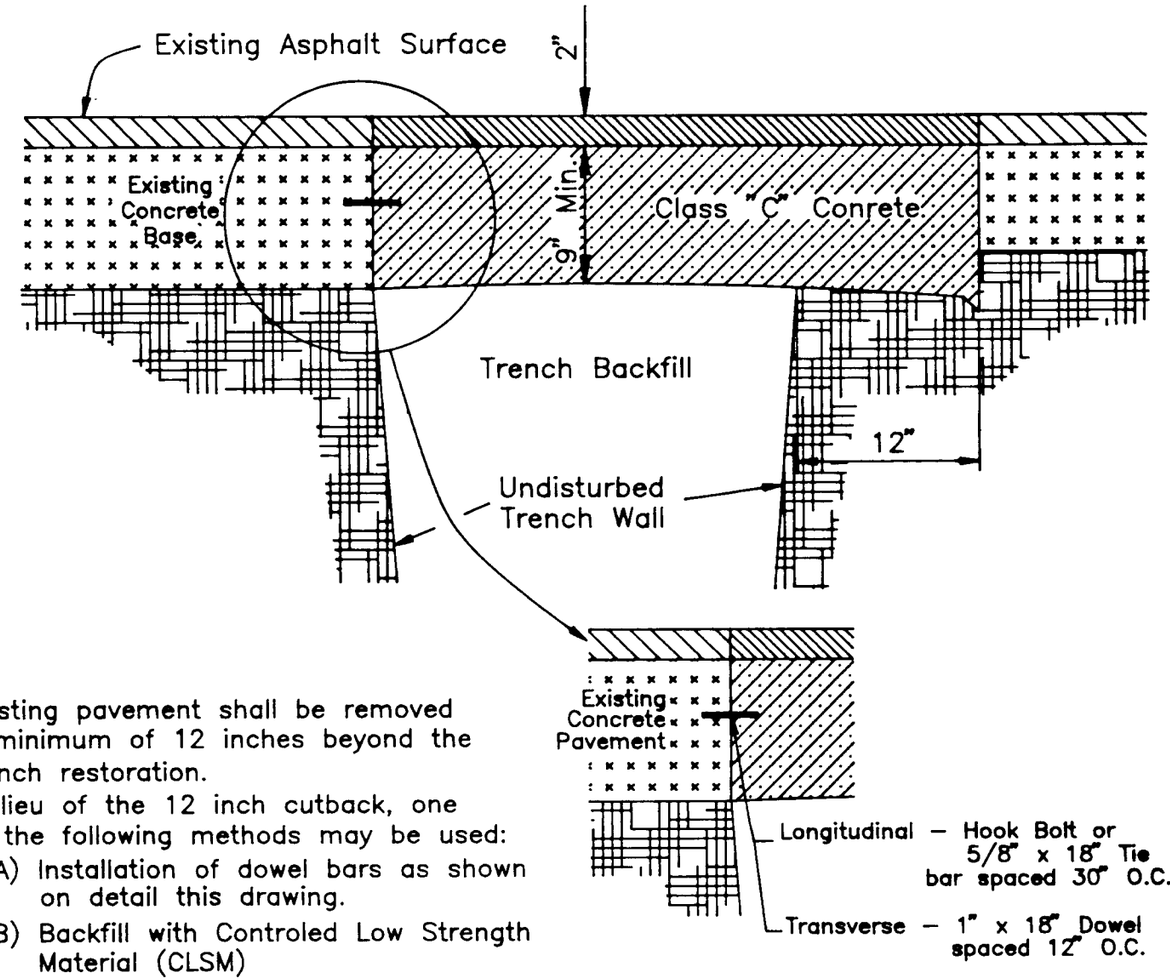

Existing pavement shall be removed a minimum of 12 inches beyond the trench restoration.

In lieu of the 12 inch cutback, one of the following methods may be used:

A) Installation of dowel bars as shown on detail this drawing.

B) Backfill with Controled Low Strength Material (CLSM)

Concrete shall be consolidated with internal type vibrator.

2 inches of Item 404 asphalt shall be compacted with 3 to 5 ton roller, 8 to 10 ton or equivalent vibratory compactor for longitudinal cuts.

Class "FS" concrete may be used when the pavement is required to be open to traffic the same day.

Item 702.01 – Edges of restoration shall be sealed with asphalt cement.

The seal shall be a uniform 3 inch wide asphalt cement seal.

CITY OF CINCINNATI
DEPARTMENT OF PUBLIC WORKS
DIVISION OF HIGHWAY ENGINEERING

STANDARD RESTORATION OF OPENINGS

SCALE: NONE MAY, 1995

CITY ENGINEER

ACC. NO. 21506

STANDARD RESTORATION
BITUMINOUS AGGREGATE BASE

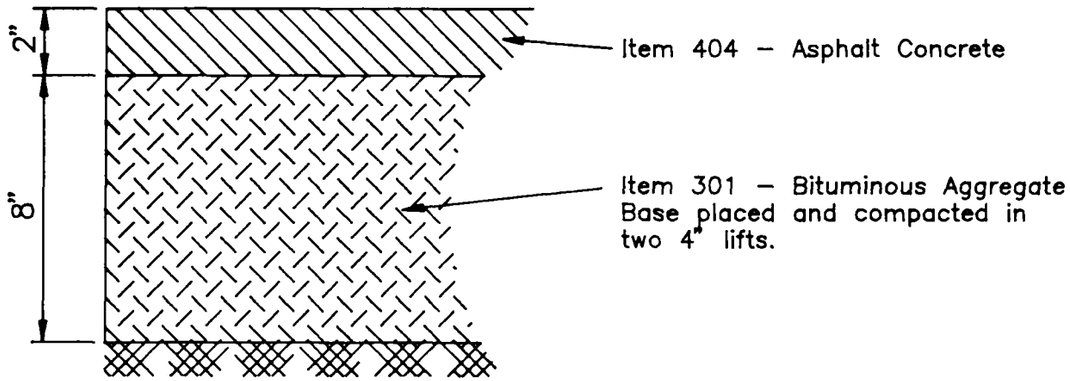

STANDARD RESTORATION
ASPHALT PAVEMENT ON STONE BASE

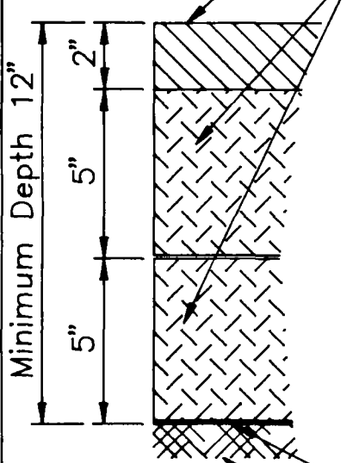

1. Item 404 – Asphalt Concrete compacted with 3 to 5 ton roller, 8 to 10 ton for longitudinal cut or equivalent vibratory compactor.
2. Item 304 – Aggregate Base.
3. Before placing the aggregate, a layer of dry screenings shall be placed on the compacted subgrade to a minimum depth of one (1) inch as an inverted choke. This shall not be rolled or compacted in any manner. The course aggregate shall then be placed in two courses, each course to be five (5) inches in depth and to be individually rolled, choked and re–rolled to thoroughly key the aggregate.

   The choke material shall consist of No. 87 screenings, crushed stone or slag.
4. Edges of restoration to be sealed with Item 702.01.

Inverted Choke

Subgrade to be backfilled in accordance with Department of Public Works Regulations governing street openings.

STANDARD RESTORATION
CONCRETE PAVEMENT

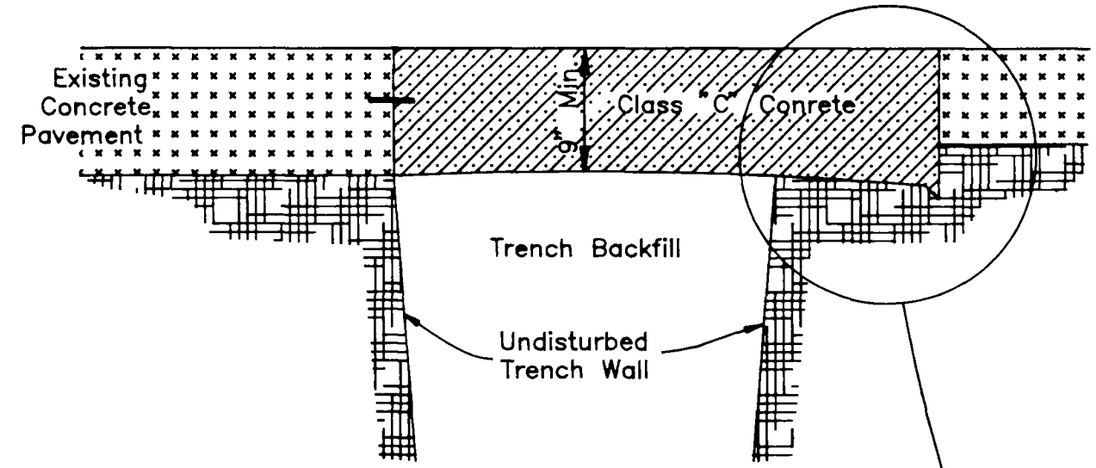

Existing pavement shall be removed a minimum of 12 inches beyond the trench restoration. In lieu of the 12 inch cutback, one of the following methods may be used:

A) Installation of dowel bars as shown on detail of drawing No.900–N.
B) Backfill with Controled Low Strength Material (CLSM)

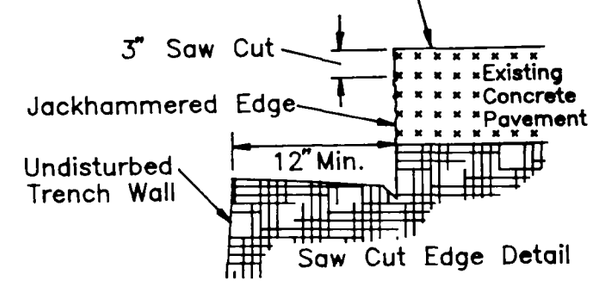

Square edge 2 inch cut by use of concrete saw or other approved method.

Break out concrete below sawcut by use of jackhammer or approved pneumatic tool.

Vertical face of existing pavement shall be cleaned by compressed air.

All surfaces shall be wetted prior to placing concrete.

Concrete shall be consolidated with internal type vibrator.

Concrete surface shall be cured as soon after the finishing operation as possible. See item 451.10 O.D.O.T.

Item 702.01 – Edges of restoration shall be sealed with asphalt cement.

The seal shall be a uniform 3 inch wide asphalt cement seal.

CITY OF CINCINNATI
DEPARTMENT OF PUBLIC WORKS
DIVISION OF HIGHWAY ENGINEERING

STANDARD RESTORATION OF OPENINGS

SCALE: NONE MAY, 1995

CITY ENGINEER

ACC. NO. 21507