City of Cincinnati
NSP Single-Family Rehabilitation Standard

The Neighborhood Stabilization Program (NSP) Single-Family Housing Rehabilitation Standard establishes minimum performance standards for any NSP rehab/redevelopment project. The standard is a guide for decision-making—about what specifications should be applied in what situations to produce uniformly safe, decent, durable and high-performing homes. It incorporates the

For example, with regard to regulatory requirements, if a program is using CDBG funds, the regulations call for rather minimal "decent, safe and sanitary" performance standards, while the federal Neighborhood Stabilization Program allows for improvements that make the home more marketable—such as installing Energy Star dishwashers, washing machines and dryers—which are not allowed in the CDBG program as of this writing.

This Standard is designed to be used with one- to four-unit dwellings of three stories or less. Some of the standards might apply to multifamily properties, but in most locations, multifamily properties are generally subject to more stringent life-safety code and other code requirements, and often have more complex requirements for egress, common areas, parking and mechanical systems.

In the Single-Family Housing Rehabilitation Standard, you will typically find both a Repair Standard and a Replacement Standard for each category of component listed. The Repair Standard defines how to meet the standard by repairing the respective component. The Replacement Standard defines how to meet the standard when replacing or installing the respective new component. There are limited instances where only one standard applies.

These Standards utilize the *State of Ohio Department of Development Housing Rehabilitation Handbook Part II Residential Rehabilitation Standards (RSS)* located at http://www.development.ohio.gov/cms/uploadedfiles/CDD/OHCP/Residenital%20Rehabilitation%20Standards.pdf as a minimum threshold. The Cincinnati Rehabilitation Standards have gone one step further to overlay RSS with NSP-specific amendments mandating energy efficiency and green standards to be included in all rehabilitation work completed under the City's NSP3 Program. When in conflict, the Cincinnati Rehabilitation Standards supersede RSS to guarantee compliance with HUD directives. The Standards also serve to ensure consistency between units completed through the NSP3 Program, meet or exceed the standards set forth by the Energy Star Qualified New Homes Standards, and ensure that program funds are used in the most efficient manner possible.

Throughout the document you will see a symbol - **[GREEN STANDARD]**. This symbol represents a standard that accomplishes one or more of the following:

- Conserve water

DRAFT

- Conserve energy
- Provide the resident with a healthier living environment
- Reduce impact on the natural environment
- Create a more sustainable product lifetime

Mission and Housing Values

The NSP mission is to eliminate neighborhood blight through renovation and demolition while providing families with safe, secure and affordable homes. NSP's primary considerations are:

1. Health and Safety
2. Performance and durability
3. Life cycle cost
4. Affordable operating cost
5. Balanced initial cost
6. Environmental impact
7. Historically sensitive exterior

Applicable Laws and Regulations

NSP projects must be in full compliance with the following statutory and regulatory requirements:

- HUD Environmental Review
- Building Code: International Residential Code
- Housing Code: The local housing code
- Federal Housing Code: Housing Quality Standards
- Life Safety Code: Life Safety Code
- HAZMAT: HUD requirements for specific programs
- EPA Lead Safe Housing Rules

NSP developers shall seek guidance to comply to the furthest extent feasible with the following codes:

- Energy: 2009 International Energy Conservation Code (IECC)
- HAZMAT: HUD Guidelines for the Evaluation and Control of Lead-Based Paint Hazards in Housing
- Building Code: CABO 1-4 Unit Dwelling Code

On a case-by-case basis, deviations from the minimum requirements of this standard will be permitted with approval of the appropriate local agency

Definitions:
New Build – New structure constructed on vacant lot.
Gut Rehab – Demolition and removal of all interior components down to bare stud walls and flooring.

DRAFT

Major Rehab – All projects with a rehab cost of twenty five thousand dollars, ($25,000.00), or more. The cost of these projects will now require lead hazards to be abated.
Moderate Rehab – All projects with the rehab cost under twenty five thousand dollars,($25,000.00). These projects shall be done lead safe.
Double Conversion – Taking a double structure and converting it to a single family structure.

DRAFT

1-Health & Safety

Fire and CO Alarms [GREEN STANDARD]	
Smoke detectors are required on each dwelling floor and in all bedrooms. CO detectors are required with all fuel-burning furnaces and water heaters, in sleep areas, and on each floor level. Hard wired systems are encouraged when feasible.	

2 - Site

Grading [GREEN STANDARD]	
Repair Standard	Minimum Life 5 yrs.
All grading adjacent to the building and for a distance of at least 10 feet away or maximum distance feasible from the building will slope away from the structure at a pitch of at least 1 inch per foot. All bare earth will be reseeded or sod will be installed to cover.	
Replacement Standard	
NA	

Outbuildings	
Repair Standard	Minimum Life 5 yrs.
Unsafe and blighted structures, including outbuildings, will be removed if it is not financially feasible to complete the repairs required to make them structurally sound, leak-free, with lead hazards stabilized. Detached garages should have operable and lockable doors and windows.	
Replacement Standard	
No outbuilding replacement is permitted in this program with the exception of garages. Detached garages should have operable and lockable doors and windows.	

Paving And Walks [GREEN STANDARD]	
Repair Standard	Minimum Life 5 yrs.
Essential paving, such as front sidewalks and driveways with minor defects, will be repaired to match. Tripping hazards greater than ¾" must be addressed. Non-essential, highly deteriorated paving, such as sidewalks that are unnecessary, will be removed and appropriately landscaped.	
Replacement Standard	
Un-repairable essential walks and driveways will be replaced with permeable paving when financially feasible or concrete. Wood-framed, handicapped-accessible ramps are an eligible expense.	

DRAFT

3 - Exterior Building Surfaces

Exterior Porches	
Repair Standard	Minimum Life 5 years
Deteriorated concrete porches will be repaired when possible. Unsafe wood porch components will be repaired with readily available materials to conform closely to historically accurate porches in the neighborhood. Porch repairs will be structurally sound, with smooth and even decking surfaces. Deteriorated wood structural components will be replaced with preservative-treated wood or appropriate composite material.	
Replacement Standard	
Porches on building designated as historic will be rebuilt to conform closely to historically accurate porches in the neighborhood. Porches on non-historic porches will be replaced with 5/4” preservative-treated decking. Replaced railings will meet code. Replaced wood structural components will be preservative-treated.	

Exterior Railings	
Repair Standard	Minimum Life 5 years
Existing handrails will be structurally sound. Guard rails are required on any accessible area with a walking surface over 30" above the adjacent ground level. Sound railings may be repaired if it is possible to maintain the existing style. On historic structures railing repairs will be historically sensitive.	
Replacement Standard	
Handrails will be present on one side of all interior and exterior steps or stairways with more than two risers and around porches or platforms over 30" above the adjacent ground level, and will meet local codes. Handrails and guard rails will conform to the style of similar components in the neighborhood. On historic structures new railings will be historically sensitive.	

Exterior Steps and Decks	
Repair Standard	Minimum Life 5 years
Steps, stairways, and porch decks will be structurally sound, reasonably level, with smooth and even surfaces. Repairs will match existing materials,	
Replacement Standard	
In non-historic structures wood decking may be replaced with 5/4” X 6” preservative-treated material and new steps will be constructed from nominal 2” preservative-treated wood. On historic structures new wood decking will be ¾” clear T & G fir, primed on all 6 sides before installation.	

DRAFT

4 - Windows and Doors

Interior Doors	
Repair Standard	Minimum Life 5 years
Baths and occupied bedrooms will have operating doors and lock sets.	
Replacement Standard	
Hollow-core, pressed-wood product consistent with the style of existing doors including a brass-plated bedroom lock set.	

Exterior Doors	
Repair Standard	Minimum Life 5 years
Exterior doors will be solid, weather-stripped and will operate smoothly. They will include a peep site, a dead bolt, and an entrance lock set.	
Replacement Standard	
Replacement doors at the front of the property for historically significant buildings will be historically sensitive. Dead bolt locks will be installed on all exterior doors keyed to match. All new doors will be B-rated at a minimum and weather-stripped to be air tight.	

Windows [GREEN STANDARD]	
Repair Standard	Minimum Life NA
All windows will operate, remain in an open position when placed there, lock when closed and the open section will be covered with a screen.	
Replacement Standard	
Windows that are not repairable may be replaced and will meet the ENERGY STAR standard for this geographic region. http://www.energystar.gov/index.cfm?c=windows_doors.pr_anat_window Windows on key façades of historically sensitive properties will be wood of the style original to the building. New windows on other properties may be vinyl and double-glazed.	

Basement Windows
Replacement Standard
Basement windows may be replaced with glass block. If so, a minimum of 2 glass block windows on opposite sides of the building must have operable and lockable center vents.

DRAFT

5 - Roofing

Flat and Low-Slope Roofing	
Repair Standard	Minimum Life 2 years
Built-up roofing that is leak-free will be re-coated and flashing and accessories repaired if their minimum life is questionable.	
Replacement Standard	
The most cost-effective roof – either 3-ply, hot built-up or EPDM – will be installed.	

Pitched Roofs	
Repair Standard	Minimum Life 5 years
Missing and leaking shingles and flashing will be repaired on otherwise functional roofs. Slate, metal and tile roofs will be repaired when possible. Antennae will be removed.	
Replacement Standard	Minimum Life of 25 years
No more than 2 layers of roofing are permitted. Fiberglass, asphalt, 3-tab, class A shingles with a prorated 25-year warranty with a continuous ridge vent will be installed over 15-lb. felt with new drip edge on all edges.	

6 - Interior Standards

Interior Walls and Ceilings	
Repair Standard	Minimum Life 3 years
Holes, cracks and deteriorated and un-keyed plaster will be repaired to match the surrounding surfaces. All visual surfaces will be stabilized to minimize lead paint hazards using premium vinyl acrylic paint.	
Replacement Standard	
When necessary plaster will be replace by dry wall. Fire-rated assemblies will be specified on a project-by-project basis as required by local codes.	

Flooring **[GREEN STANDARD]**	
Repair Standard	Minimum Life 3 years
Bathroom, kitchen and other water-susceptible floor areas will be covered with water-resistant flooring that is free from tears or tripping hazards. Damaged wood floor will be repaired. When existing deteriorated carpet is installed over hardwood floors, the hardwood will be refinished whenever possible. Basement floors will be continuous concrete at least 1" thick if habitable living space.	
Replacement Standard	
Baths will receive resilient sheet goods over plywood underlayment, and kitchens will receive resilient sheet goods or tile over plywood underlayment. Whenever possible rooms other than	

DRAFT

kitchens and baths with existing wood flooring will be maintained as wood floors and refinished when appropriate. Rooms other than kitchens or baths without usable wood floors may be finished with carpet, at a minimum carpet must [need specific carpet rating]. New basement slabs will be at least 3" thick and have a 6-mil vapor barrier.

7 - Electric

Passage Lighting [GREEN STANDARD]	
Repair Standard	Minimum Life 7 years
All lights and switches in hallways, stairs and other passages will be operable and safe. Existing fixtures with incandescent lamp fittings will have minimum 7W CFL replacement lamps installed.	
Replacement Standard	
All halls, stairs and rooms necessary to cross to other rooms and stairways must be well lit and controlled by a 3-way switch using concealed wiring. Attics, basements and crawl spaces must have utility fixtures. All new light fixtures will be ENERGY STAR labeled.	

Kitchen Electric Distribution	
Repair Standard	Minimum Life 5 years
Existing receptacles, fixtures and switches will be safe and grounded.	
Replacement Standard	
Permanently installed or proposed stoves, refrigerators, freezers, dishwashers and disposals, washers and dryers will have separate circuits sized to N.E.C. Two separate 20-amp counter circuits are required with each kitchen area.	

Interior Electric Distribution	
Repair Standard	Minimum Life 7 years
All exposed knob and tube will be replaced. Electrical distribution system will be repaired to meet the latest version of the National Electric Code.	
Replacement Standard	
Electrical distribution system will meet the latest version of the National Electric Code.	

Service and Panel	
Repair Standard	Minimum Life 10 years
Distribution panels will have a main disconnect, at least 10 circuit-breaker-protected circuits, a 150-amp minimum capacity and be adequate to safely supply existing and proposed devices.	
Replacement Standard	
200-amp service with a main disconnect panel containing at least 30 circuit breaker positions.	

DRAFT

8 - Plumbing System

Drain, Waste, Vent Lines	
Repair Standard	Minimum Life 1 year
Waste and vent lines must function without losing the trap seal.	
Replacement Standard	
When walls are removed exposing vent and waste lines those lines will be reworked to the current mechanical code.	

Plumbing Fixtures [GREEN STANDARD]	
Repair Standard	Minimum Life 3 years
All fixtures and faucets will have working, drip-free components. Toilets with greater that a 1.6 GPF rating will be replaced with a maximum 1.3 GPF model.	
Replacement Standard	
Single lever, metal faucets and shower diverters with 15-year, drip-free warranty and maximum 2.0 GPM flow.	

Plumbing Minimum Equipment [GREEN STANDARD]	
Repair Standard	Minimum Life 3 years
Existing equipment will be repaired to conform to the Housing Quality Standards.	
Replacement Standard	
Every dwelling unit will have a minimum of one single bowl sink with hot and cold running water in the kitchen and at least one bathroom containing a vanity with a sink, and a shower/tub unit, both with hot and cold running water, and a toilet. Redesigned kitchens will include an ENERGY STAR-labeled dishwasher.	

Water Heaters
Replacement Standard
All units will have a minimum 40-gallon, gas-fired or electric water heater with a 10-year warranty installed to the mechanical code. High efficiency power-vented or sealed combustion tankless models are required. Tankless and At-Source water heaters are also acceptable.

9 - HVAC

Air Conditioning [GREEN STANDARD]	
Repair Standard	Minimum Life - 5
Non-functioning, non-repairable air conditioners will be removed and drained of all CFCs. Existing central air conditioning will be inspected, serviced and refurbished to operate safely.	
Replacement Standard	Minimum Life 20 years
New HVAC systems will include installed central air conditioning system ($\geq$ 13 SEER)	

DRAFT

Heating System [GREEN STANDARD]	
Repair Standard	Minimum Life 5 years
Workable existing heating systems will be inspected and serviced to operate in a safe manner. Regardless of condition, resistance electric heating systems will be removed and replaced with systems as described below, unless the home has either a very low heating load to super-insulation.	
Replacement Standard	Minimum Life 25 years
Gas-fired heating plants will be rated at ≥ 92% AFUE or better. Heat pumps will be rated at ≥ 15 SEER. Programmable thermostats are required.	

Distribution System	
Repair Standard	Minimum Life 5 years
Duct work and radiator piping will be well supported, insulated in unconditioned space and adequate to maintain 68°F measured 36" off the floor when the outside temperature is the average yearly minimum, in all habitable and essential rooms. All duct work will be insulated to R-7, sealed at all seams with mastic (not tape) and pressure tested to eliminate leakage.	
Replacement Standard	Minimum Life 25 years
All duct work will be insulated to R-7, sealed at all seams with mastic (not tape), pressure tested to eliminate leakage and run in concealed space.	

10 – Appliances

Kitchen Appliances [GREEN STANDARD]
All kitchens will have ENERGY STAR-labeled appliances where applicable. All kitchens will include refrigerator, oven, cooking range, dishwasher, garbage disposal, and permanently installed microwave.

Other Appliances [GREEN STANDARD]
All NSP2 assisted homes will include both a clothes washer and clothes dryer that meets or exceeds Energy Star Standards. Please reference the following for additional guidance: http://www.hudnsphelp.info/media/resources/GuidanceonNSPEligibleAppliancePurchases.pdf

DRAFT

Ohio | Department of Development

Office of Housing and Community Partnerships

Housing Rehabilitation Handbook

Part II

Residential Rehabilitation Standards (RRS) and Commentary

November 2008

Ted Strickland, Governor of Ohio
Lee Fisher, Lt. Governor of Ohio
Director, Ohio Department of Development

ACKNOWLEDGMENTS

The Office of Housing and Community Partnerships (OHCP) would like to thank the members of the RRS Revision Committee for contributing their time, insight and technical expertise. The committee members are as follows:

Karen Banyai, Ohio Housing Finance Agency
Russ Bogue, ODOD, Office of Community Services
Marshall Bleckman, Bleckman & Associates, Inc.
Mike Burns, OHCP
Jeff Christopher, CT Consultants, Inc.
Charles Crook, Wayne Metropolitan Housing Authority
Steve Daum, WSOS
Betsy Giffin, OHCP
Carol Guercio, OHCP
Rick Healy, Bel-O-Mar Regional Council
Bob Kowalk, WSOS
Mark Lahna, Ohio Regional Development Corporation
Rudy Leatherman, Bacharach, Inc.
Keith Romine, Gallia – Meigs Community Action Agency
Marvin Rudd, Mid-Ohio Regional Planning Corporation
G.H. Runevitch, COAD
Bernard Salzman, COAD
Tom Sherman, OHCP - retired
Al Sheldon, City of Circleville
Janet Shirley, OHCP
Les Warner, ICF International, Inc.
Mort Webb, Neighborhood Development Services, Inc.
Ryan Wilkins, State Certified Plumbing Inspector
Chris Wojno, Chris Wojno Consulting

OHCP would also like to thank all other individuals who reviewed and commented on the drafts.

OHCP Residential Revitalization Section Staff

Doug Harsany, Manager
Dana Leas
John Saunders
Shana Garrett
Heidi Crabtree
Don Watts

OHCP extends a special thanks to Norma Hadden for word-processing the final edition.

Table of Contents

Chapter/ Section	Contents	Page Number
Introduction		
Chapter 1	**Administration**	1
1.1	Intent of the RRS, REHAB, Home Repair and new Construction	1
1.2	Scope of the RRS	3
1.3	Authority	5
1.4	Enforcement	7
1.5	Effective Date	7
1.6	Revisions	7
1.7	Classifications of Measures	8
1.8	Qualifications and Workmanship	11
1.9	Material Standards	11
Chapter 2	**Building Structure**	13
2.1	Foundations, Basements, Crawl Spaces and Cellars	13
2.2	Floor Construction, Framing and Sub-Floors	18
2.3	Wall Construction	20
2.4	Windows and Doors	22
2.5	Roof and Ceiling Construction, Attics & Roof Drainage	24
2.6	Building Shell Energy Efficiency	26
2.7	Attached Structures: Exterior Porches, Balconies, and Uninhabitable Additions	33
2.8	Interior and Exterior Stairs	34
2.9	New Construction	34
2.10	Modular, Manufactured and Mobile Homes	35
2.11	Green Building	35
Chapter 3	**Heating, Ventilation and air Conditioning Systems**	38
3.1	Source of Heat	38
3.2	Chimneys and Fireplaces (Solid Fuels)	38
3.3	Chimneys and Vents (Natural Gas, Propane Oil)	39
3.4	Heating Equipment (All Fuels)	40
3.5	Equipment Inspections	43
3.6	Cooling Equipment (Air Conditioning)	44
3.7	Heating and Cooling Distribution System	45
3.8	Water Heater Equipment (All Fuels)	46
3.9	Fuel-Gas Piping	48

Chapter/ Section	Contents	Page Number
Chapter 4	**Electrical System**	50
4.1	Work Execution Standards	50
4.2	Grounding and System Protection	54
4.3	Service Entrance and Equipment – Main Panel Distribution Center	55
4.4	Branch Circuits	58
4.5	Premises Wiring	59
4.6	Receptacles	61
4.7	GFCI Protection	64
4.8	Lighting Fixtures	64
4.9	Smoke Detectors	66
Chapter 5	**Plumbing**	67
5.1	Inspection and Repair Requirements	67
5.2	Water Supply	69
5.3	Plumbing Fixtures	73
5.4	Sanitary Drainage	74
Chapter 6	**Environment**	78
6.1	Premises and Dwelling Condition	78
6.2	Lighting, Ventilation and Occupancy Limitations	84
6.3	Habitable Spaces	86
6.4	Occupiable Spaces	87
6.5	Accessibility	89
6.6	Fire and Carbon Monoxide Safety	89
6.7	Occupant Health	91
6.8	Historic Preservation	93
6.9	Flood Plain Management	93
Chapter 7	**The Elimination of Lead-Based Paint Hazards**	95
7.1	General Conditions	95
7.2	Program Personnel Requirements	96
7.3	Procedural Protocol	97
7.4	Specifications	100
7.5	Qualifications of Contractors and Employees	102
7.6	Documentation	103

Chapter/ Section	Contents	Page Number
Appendix 1-A		105
Appendix 2-A	Energy Audits	107
Appendix 2-B	Calculations for Determining Seasonal Heat Loss and Payback	109
Appendix 3-A	Combustion Testing Procedures	111
Appendix 3-B	Inspection and Testing Procedures for all appliances Natural Gas or Liquid Petroleum	116
Appendix 3-B 1	Inspection and Testing Procedures for Electric Furnaces And Electric Heat Pumps	117
Appendix 3-B 2	Inspection and Testing Procedures for all appliances that burn Fuel Oil	118
Appendix 3-B 3	Inspection and Testing Procedures for Solid Fuel Furnaces And Stoves	119
Appendix 3-C	Cooling Equipment Inspection Requirements	120
Appendix 3-D	Water Heater Inspection Requirements	121
Appendix 3-E	Guidelines for Sizing Water Heaters and Calculating Payback	122
Appendix 4-A	Electric Receptacle and Fixture Location Requirements	124
Appendix 5-A	Guidelines for Sizing Plumbing Supply Lines	127
Appendix 5-A 1	Table – Water Demand of Fixtures and Fixture Groups in Gallons per Minute	128
Appendix 5-A 2	Table-Pipe Sizing Based on Velocity Limitation	129
Appendix 7-A	Lead-Based Paint Requirements and Guidance	130
Appendix 7-B	Contractor Occupant Protection Plan/Risk Analysis	161
Appendix 8-A	Summary of Inspection and Testing Requirements	164
Appendix 8-B	Abbreviations	166
Appendix 8-C	Definitions	167
2008 Residential Rehabilitation Standards Index		171

INTRODUCTION

BACKGROUND

The Office of Housing and Community Partnerships (OHCP) developed the Residential Rehabilitation Standards (RRS) as the primary document for identifying and correcting sub-standard conditions in homes being rehabilitated by grantees participating in OHCP-funded housing programs. The RRS combines OHCP rehabilitation program policy with recognized codes and standards. This document is intended to clarify OHCP's expectations for rehabilitation while promoting safe, healthy, durable, energy efficient, affordable, and habitable housing for Ohio's low- to moderate-income population.

PURPOSE OF THIS EDITION

As the cost of construction material rises, and funding resources decline, OHCP felt it necessary to make revisions to the RRS in order to provide greater flexibility for Rehabilitation Specialists in the field, as well as ensuring that rehabilitation program funds are used in the most efficient manner possible.

Working in collaboration with Rehabilitation Specialists and Program Managers representing housing grantees from across the state, OHCP has revised the RRS so that it more clearly defines the standards for rehabilitation, including adding new practices and addressing various programmatic concerns. The significant changes between this current edition and previous editions include: A greater distinction between what is a standard and what is commentary, an increase in the discretion of rehabilitation specialists regarding the scope of work to be done, a chapter detailing Lead-Based Paint standards; and updated appendixes providing guidance on various rehabilitation practices.

READER ADVISORY

OHCP advised grantees that the RRS cannot be viewed as the only resource necessary for rehabilitation work. The RRS is not detailed enough to describe all of the codes, standards and practices which apply to rehabilitation. Also, the ability to produce quality rehabilitation work presumes an acceptable level of knowledge and/or experience. Therefore, OHCP expects Rehabilitation Specialists to have copies of the various codes and standards referenced in the RRS, and a working knowledge of how to meet them. Furthermore, OHCP expects that those responsible for doing rehabilitation work are qualified and competent so that the desired results are achieved.

OHCP encourages the reproduction and distribution of the RRS so that local program administrative staff, contractors, local code officials, and other parties actively involved in rehabilitation have copies. Readers are advised to consider the value of the information noted in the commentaries as well as the requirements noted in the standards. Personnel who have questions about the RRS should seek clarification from OHCP, or further research the codes and standards referenced in the RRS. As mentioned above, the RRS does not provide sufficient detail to describe the techniques and materials needed to meet the standards, or provide a standard for every deficiency a dwelling can have. In some cases, grantees will need to apply other standards or use their own judgment based on practical experience and a sound interpretation of the RRS.

CHAPTER ONE

ADMINISTRATION

GENERAL REQUIREMENTS

Chapter one, administration, is intended to provide a framework for the use of this document, the **Residential Rehabilitation Standards (RRS)**. In this chapter is outlined the basic information needed to understand why it was developed, what the documents purpose, scope and structure is, and when, where and how it is to be used.

1.1 INTENT OF THE RRS, REHAB, HOME REPAIR, AND NEW CONSTRUCTION

1.1.1 THE INTENT OF THE RRS AND REHABILITATION

Standard: The intent of the RRS is as follows:

a. To establish standards and requirements to which each rehabilitated dwelling **shall** comply.
b. To establish standards and requirements to which each newly constructed house and addition **shall** comply.
c. To establish standards and requirements for how all new and repair work **shall** be done.
d. To promote sound rehabilitation, construction, and repair practices and greater consistency among the Office of Housing and Community Partnerships (OHCP) grantees.

Commentary: OHCP intends for the RRS to be the primary document for guiding the rehabilitation of existing dwellings under OHCP-funded housing programs. In addition to establishing broad policy for rehabilitation, the RRS also sets specific standards and requirements for a dwelling's structural, HVAC (heating/ventilation/air conditioning), electrical and plumbing systems, and its environmental conditions. However, OHCP acknowledges that other documents, including local codes and the codes referenced within the RRS, will need to be applied to rehabilitation projects.

OHCP also intends for the RRS to provide a framework for determining both the scope and quality of all new and repair work to be done under OHCP funded housing programs and to set guidelines for the use of other building codes that must be followed in the completion of that work.

Regarding the application of codes to existing houses, OHCP has based the RRS on a combination of the International Property Maintenance Code and various building codes which are generally related to "new construction" such as the 2006 Residential Code of Ohio and the National Electric Code.

While a housing maintenance code is appropriate for setting standards for safe, sanitary and decent housing, a maintenance code fails to set specific standards governing the repairs. Building codes, on the other hand, set the standards for the repair work and, accordingly, are appropriate for rehabilitation. For example, building codes can be used as the installation standard when an item is being replaced or upgraded and therefore, can be installed as though it were "new" (e.g. a new roof, a new furnace, or portions of an electrical system). However, OHCP recognizes that for existing houses, it may not be appropriate for building codes to be used as the sole basis for identifying sub-standard conditions or as the sole standard for rehabilitation work. Furthermore, OHCP does not expect that the entire dwelling or system will comply with "new construction" codes, but rather that the rehabilitation work done to a dwelling or a system will, where feasible, comply with the referenced codes.

The RRS seeks to span the purpose of these two types of documents. It is designed to set standards regarding what is sub-standard and needs to be addressed that will be used in developing the scope of the work to be completed (much like a property maintenance code), and also sets the standards for how the work will be done (much like a new construction code).

Although the RRS is comprehensive, it is not OHCP's intent that it can substitute for a detailed inspection guide, work specification or performance manual. Also, it is not OHCP's intent that familiarity with the RRS can substitute for formal training or sound judgment based on practical experience.

The intent of OHCP-funded rehabilitation is to correct sub-standard conditions with Ohio's existing housing stock so that dwellings are safer, healthier, more durable, more affordable, more energy efficient and more habitable. Rehabilitation must correct a broad range of conditions that afflict the target housing stock. Rehabilitation needs to address more than those conditions that threaten the immediate "health and safety" of the occupants. It also needs to consider conditions that will create a future hazard, that make the dwelling less useful and less affordable to the occupant, and that reduce the dwelling's long-term habitability. This broad objective will require a thorough inspection of the dwelling's structural and mechanical systems, an assessment of the occupant's critical needs and, in some cases, an assessment of the dwelling's visual impact on the neighborhood.

1.1.2 THE INTENT OF HOME REPAIRS

Standard: The intent of OHCP-funded home repair **shall** be to correct one or two significant problems that adversely affect occupant health, safety, and or structural integrity. The types of work that **should** generally be considered eligible to be done through the home repair activity include structural system repairs, mechanical system repairs, plumbing system tap-ins, wells, septic systems, weatherization, accessibility, and lead-based paint hazard reduction. All work completed through this activity **shall** meet the applicable standards as outlined in the RRS.

1.1.3 THE INTENT OF NEW CONSTRUCTION

Standard: The intent of new housing construction **shall** be to create new permanent housing to expand the supply of low-income owner occupied or renter occupied housing stock, and **shall** ensure that these houses will be safe, healthy, structurally and mechanically sound, affordable, and energy efficient. The RRS **shall** also ensure that all houses built through this activity **shall** meet the same, appropriate housing codes and standards wherever, and by whomever the houses are built.

1.2 SCOPE OF THE RRS

1.2.1 WHAT CODES APPLY

Standard: Grantees operating housing rehabilitation, home repair, or new construction programs or activities in jurisdictions that have not adopted a housing or building code **shall** comply with the provisions of the RRS. Grantees operating housing rehabilitation programs in jurisdictions that have adopted a housing or building code **shall** comply with those provisions of the RRS that are more rigorous than the adopted codes. The RRS **shall** supersede those provisions of the local codes that are less safe, less effective or less comprehensive than the RRS.

Commentary: A community that has not formally adopted a housing or building code (and therefore does not have a document for identifying sub-standard conditions and establishing the codes and standards for construction, rehabilitation, and or repair work) must use the RRS. In other words, the RRS will, in effect, become the housing standard and will establish applicable codes for those communities which have not established one for themselves. A community which has adopted a housing code, such as the **International Property Maintenance Code (IPMC)** and/or building codes such as the **2006 Residential Code of Ohio (RCO)** and the **National Electric Code (NEC)**, must use those local codes in conjunction with the RRS for their new construction, rehabilitation, and home repair programs; for each specific item or detail required by one of the codes or standards, the more restrictive code or standard must prevail.

1.2.2 REQUIREMENTS WHEN ITEMS ARE NOT SPECIFICALLY ADDRESSED WITHIN THE RRS

1.2.2.1

Standard: Regardless of whether each of the items covered by one of the following principles are explicitly addressed in the standards of the RRS, each of the following **shall** apply to each house to which the RRS applies (See 1.7. for a definition and proper use of the word **shall**):

a. All critical health and safety items, which pose the possibility of death or more than a remote possibility of a critical health issue from long or short term exposure by one or more of the occupants, **shall** be addressed.

b. All items that pose a risk to one or more of the occupants, even though it is minimal, because of likely contact on a several times a week basis **shall** be addressed.
c. All items that threaten the integrity of the house, because failure to replace will lead to deterioration, collapse, or other failure of a housing component **shall** be addressed.
d. All items that must be done to ensure that all new work complies with the applicable building codes **shall** be completed.
e. All items that are necessary for basic sanitation and privacy **shall** be completed.

1.2.2.2

Standard: Regardless of whether each of the items covered by one of the following principles are explicitly addressed in the standards of the RRS, each of the following **should** apply to each house to which the RRS applies (See 1.7. for a definition and proper use of the word **should**):

a. All items that are health and safety related and not covered in 1.2.2.1 above **should** be completed.
b. All items that substantially improve the affordability of the housing for the occupants **should** be completed.
c. All items that substantially improve the comfort of one or more of the occupants **should** be completed.
d. All items that, if not addressed, may lead to minor deterioration of the house or minor unsanitary conditions within the house **should** be completed.
e. All items that are a means of saving costs, while accomplishing the goals of 1.2.2.1 above **should** be done.

1.2.3 <u>ADDITIONAL WORK AND/OR ALTERNATIVE APPROACHES</u>

Standard: The RRS is not intended to identify all of the standards to which a dwelling must comply, and therefore applies the principles outlined in *1.2.2* above. Grantees are allowed to apply alternative standards or practices. However, the alternative standards or practices **shall** be recognized as safe, effective and no less rigorous than those identified in the RRS. Also see section *1.7* for related information.

Exception: If the completion of all work required on a unit to meet the shall's will result in a unit exceeding the program limits for rehabilitation, then specific standards in this document may be eliminated from the scope of work or alternative approaches used to bring the rehabilitation within the program limits. When this exception is used, the following requirements **shall** be met:

A. One copy of the form found in Appendix 1-A **shall** be completed and included in the client file for each specific standard that has been eliminated.
B. Work that is optional (**shoulds** rather than **shalls**) **shall not** be completed if there is inadequate funding to complete all of the **shalls**.

C. This exception **shall** only be used based upon the original staff cost estimate, or at the initial round of bidding. It **shall not** be used after multiple rounds of bidding or after work has started on a project.
D. Consideration **should** be given to the option of seeking a waiver from OHCP to exceed the cost limit on this project as an alternative to this approach.

Commentary: Because housing rehabilitation is complex, OHCP realizes that the RRS cannot identify every problem that may exist or set a standard for every part of a home. Also, OHCP understands that rehabilitation work cannot always strictly comply with the referenced codes and that alternative standards or methods may be applied, as long as the alternatives achieve satisfactory results. Where the RRS fails to adequately address something that, in the judgment of the grantee, constitutes a real problem to be corrected, OHCP encourages grantees to apply another recognized code or standard.

OHCP expects grantees to use the exception listed within this standard infrequently, keeping in mind the need to comply with existing walk-away policies, to provide consistent and fair service to clients, and a recognition that rehabilitation is designed to make the whole house safe, healthy, and durable.

1.3 AUTHORITY

1.3.1 GRANTEE OBLIGATIONS AND WAIVER PROVISIONS

Standard: Grantees **shall** ensure that the provisions of the RRS are applied to each dwelling that is constructed, rehabilitated, or repaired with financial assistance provided in whole or in part from OHCP. Grantees **shall** not waive any provision of the RRS without prior written approval from OHCP. If a grantee cannot apply a specific provision of the RRS to a project, or projects, a waiver of that provision can be requested from OHCP. The written request **shall** be submitted to OHCP in advance and detail the legal and/or factual basis for the waiver. For example, a waiver can be sought if a community has an ordinance prohibiting something that the RRS requires or if the specific requirement is impossible to meet on a particular house.

Commentary: Primary responsibility for ensuring compliance with the RRS rests with the grantee. OHCP expects each grantee to apply the RRS to the best of their ability on each rehabilitation project. Because the RRS is OHCP's housing rehabilitation standard, the RRS applies to all rehabilitation projects receiving financial assistance from OHCP and grantees cannot unilaterally decide which provisions of the RRS they will not adopt.

OHCP realizes that grantees must be able to take into consideration the relative seriousness of the conditions and the cost of the repairs in order to decide what is necessary and feasible. OHCP also realizes that grantees often must consider the owners input. However, owner input cannot be allowed to prevent compliance with the RRS. In other words, owners cannot refuse measures which would be required for the dwelling to comply with the RRS or receive measures prohibited by the RRS.

1.3.2 COORDINATION WITH WORK OF OWNERS AND OTHER AGENCIES

Standard: Grantees **shall** ensure that any required construction, rehabilitation, or repair measure installed by an owner, occupant or other agency or program, is completed in a manner consistent with the RRS and is completed prior to considering the rehabilitation project finished.

Commentary: Occasionally, materials are installed by the homeowners themselves or some items on the rehabilitation work specifications are completed in coordination with another agency or program (e.g. insulation to be installed by another federally-funded program). While OHCP encourages coordination with other programs and homeowners, OHCP still expects the entire rehabilitation project to comply with the RRS when it is completed. This means that the work must be properly done and that it must be finished before the rehabilitation project is considered complete. A promise or referral with the intent to do work is not acceptable. Instead, OHCP expects grantees to inspect the work to ensure that it was done and done correctly. Otherwise, there is no assurance that the home meets the RRS requirements.

1.3.3 WALK AWAY POLICY COMPLIANCE

Standard: Dwellings that cannot be made to comply with the provisions of the RRS within the parameters of the grantee's "walk-away" policy **shall** not be rehabilitated.

Commentary: The OHCP Housing Rehabilitation Handbook requires each grantee to establish a "walk-away" policy. The purpose of the "walk-away" policy is to prevent investment in a home which is so deteriorated that compliance with the RRS cannot be achieved within the grantee's limit of financial assistance. While it may be difficult to declare a home a "walk-away", it is sometimes necessary. If the cost of the OHCP-funded work exceeds the grantee's limit, and no supplemental sources of financial assistance are available, rehabilitation must not be attempted.

1.3.4 COORDINATION WITH BUILDING OFFICIALS

Standard: Grantees operating housing rehabilitation programs in jurisdictions that have housing code inspection officials, and/or operating new construction, rehabilitation, or repair programs in communities that have existing building departments and building code inspection officials **shall**, to the extent practicable, coordinate the initial inspection, the preparation of the work specifications and the final inspection with the appropriate local code inspection officials.

Commentary: Coordinating with code officials (e. g. making sure that the scope of work will meet local codes, covering any questions regarding local codes with them prior to beginning work, and making sure that they have signed off on the local codes prior to paying the contractor) is a good way to add authority and expertise to the rehabilitation process. Also code officials who are experienced in overseeing electrical, plumbing and HVAC work can detect deficiencies with system design and workmanship.

Consequently, their involvement in the rehabilitation process, especially early on, can help prevent subsequent problems with code compliance and work quality. Developing a working relationship with code officials can also be critical when alternative methods for achieving code compliance need to be accepted and approved.

1.4 ENFORCEMENT

Standard: Grantees are contractually obligated to comply with the provisions of the RRS. Failure to comply with the RRS and/or failure to follow the actions required by OHCP to correct the non-compliance **shall** be considered a violation of the grant agreement. Continued non-compliance and/or continued failure to follow the corrective actions **shall** be considered grounds for OHCP to modify, suspend or terminate the grant agreement.

Commentary: Because compliance with the RRS is stipulated in the grant agreement between OHCP and the grantee, OHCP reserves the right to enforce compliance through the terms and conditions of the grant agreement. Grantees must know that OHCP can require them to return to a project and correct deficiencies or require other actions to enforce compliance. Repeated non-compliance can result in OHCP evoking those clauses of the grant agreement which allow OHCP to restrict the grantee's program operation or funding.

1.5 EFFECTIVE DATE

Standard: The latest edition of the RRS **shall** become effective for jurisdictions with an ODOD grant which begins on or after the effective date noted on the RRS title page.

Commentary: This means that dwellings being constructed, rehabilitated, or repaired under grants awarded on or after the effective date must comply with the latest edition of the RRS. OHCP believes that linking the effective date and the grant award date is the fairest way for jurisdictions to implement changes contained in revised editions. Dwellings being constructed, rehabilitated, or repaired under grants awarded before the effective date are not retroactively subject to the latest edition of the RRS. However, OHCP encourages grantees to apply the latest edition of the RRS to dwellings being rehabilitated under existing grants if the grantee determines that it is feasible to do so. It is up to the grantee to adequately document which version of the RRS they have adopted for each project.

1.6 REVISIONS

Standard: The RRS can be revised to reflect changes in state or federal program policies and/or regulations, changes to the codes referenced in the RRS or changes in rehabilitation techniques and materials.

Revisions due to changes in state or federal program regulations or significant changes to the referenced codes **shall** become effective immediately upon written notification from OHCP. Revisions due to changes in OHCP program policies or changes in rehabilitation techniques and materials **shall** be open to grantee review and comment before becoming effective.

Commentary: OHCP intends to periodically revise the RRS to stay current with technical and programmatic changes. Changes initiated by government regulation or law, or by code authorities are effective immediately. Changes initiated by OHCP become effective, as appropriate, after grantees have had the opportunity to review and comment on the proposed changes.

1.7 CLASSIFICATIONS OF MEASURES

1.7.1 PRIORITIZATION AND CATEGORIZATION OF STANDARDS

Standard: The RRS seeks to set priorities for the scope of work to be completed in the construction, rehabilitation, and repair of houses, and to determine how the work is to be completed. Therefore, the RRS will make use of the following terms in the standards, which will be bolded in the standards, and which **shall** have explicit meanings as defined below. The following definitions **shall** be applied to the terms use in each standard, and each standard's meaning **shall** be construed consistent with the following definitions:

Shall: This term will designate that the item must be done in every case not explicitly exempted by the standard.

Should: This term will designate that it is recommended to do the item when feasible, and when funds allow.

Shall Not: This term will designate items explicitly prohibited from being done as a part of the scope of work on any project.

1.7.2 REFERENCED CODES

Standard: The following housing and building codes are currently in effect in the State of Ohio, and will be the primary codes referenced in the RRS. Other codes used will be identified explicitly in the text. Each rehabilitation specialist responsible for developing the scope of work and/or conducting inspections on projects funded in whole or in part by OHCP **shall** have access to the RRS and to each of the most recently adopted by the State of Ohio versions, of the following codes.

- International Property Maintenance Code
- Residential Code of Ohio
- Ohio Plumbing Code
- Ohio Mechanical Code
- National Electric Code
- International Energy Conservation Code
- International Fuel Gas Code

1.7.3 SUB-STANDARD CONDITION

Standard: All individual work items conducted through the OHCP programs **shall** accomplish one or more of the following, and items that do not address one or more of the following **shall not** be done. Needs that can be addressed by completing one or more of the following are considered to be sub-standard conditions (also see *1.7.4 & 1.7.5*):

a. Meet the health and safety needs of the occupants.
b. Make an improvement to the affordability of the housing for the occupants.
c. Improve the comfort of one or more of the occupants.
d. Improve the accessibility of the housing elements for one or more of the occupants.
e. Meet basic needs for privacy.
f. Address a critical need for storage, work, or living space.
g. Protect the integrity of the house or bring the house into compliance with applicable codes.
h. Improve the physical appearance of the neighborhood in a way that can possibly lead to community redevelopment (requires work to multiple houses in the immediate neighborhood).

Commentary: This standard is designed to provide guidance on the threshold for when an item may be done, in contrast with 1.2.2, which provides guidance on when an item must be done. For example, some substandard conditions are incipient problems like an antiquated electrical system or old corroded water supply lines, which will become serious problems sooner or later, even though functional and installed according to the code in effect at the time. Other substandard conditions are deficiencies like no insulation or an old inefficient heating system which, though not code violations or safety hazards, are nevertheless problems that make a home less comfortable and affordable. These types of substandard conditions are allowed to be done under the RRS based upon the judgment of the grantee.

1.7.4 AMENITY

An amenity is an unnecessary item or measure intended solely for convenience or increasing property value that does not directly relate to or result from correcting a sub-standard condition as defined in *1.7.3*. Amenities **shall not** be addressed for projects funded or partially funded through OHCP.

Commentary: Unlike a measure which corrects a sub-standard condition, an amenity is an alteration or a remodeling which does not eliminate a hazard or remedy a problem (see *1.7.3*). In the context of rehabilitation, amenities are unnecessary improvements made for their own sake rather than as a result of doing purposeful rehabilitation work. Installing a satellite TV dish or turning a basement into a recreation room are clear examples of unnecessary and unacceptable work. However, sometimes measures that ordinarily would be considered an amenity may be acceptable if they are part of doing real rehabilitation work.

For example, in the course of replacing sub-standard plumbing and structural systems in a bathroom, moving the plumbing fixtures to more efficiently use a limited space is acceptable. Or, in the course of upgrading an electrical system, adding receptacles to increase convenience is acceptable.

1.7.5 COSMETIC IMPROVEMENT

A cosmetic improvement is an unnecessary item or measure intended to solely enhance visual appearance or perceived value. A cosmetic improvement is also an unnecessary enhancement to an existing adequate condition, or an item that unnecessarily exceeds the standard specification for correcting a sub-standard condition. Cosmetic improvements **shall not** be addressed for projects funded or partially funded through OHCP.

Commentary: Cosmetic improvements are items or measures designed solely to embellish or add unnecessary decoration. Cosmetic improvements often have nothing to do with correcting sub-standard conditions.

Painting and wallpapering for the purpose of re-decorating or replacing exterior siding simply to change color or style are clear examples of this kind of cosmetic improvement. Sometimes rehabilitation work can lead to cosmetic improvements if excessive enhancement occurs. Replacing a defective bathroom floor covering with marble tile when vinyl sheet goods is the standard material is a clear example of that kind of unacceptable cosmetic improvement.

That is not to say that houses with completed work are to be ugly. Many times, in conducting work to meet sub-standard conditions, improvements to the physical appearance will result. Cleaning up garbage and rubbish; scraping and repainting over alligatored, peeling paint (done in a lead-safe manner); and repairing deteriorated exterior steps are all examples of this. These kinds of improvements, when done to several houses on a block, can improve the appearance of a neighborhood, and can potentially, in conjunction with other activities, lead to community redevelopment, which is a desired outcome.

OHCP expects grantees to focus rehabilitation on correcting sub-standard conditions and to avoid doing work that is classified as amenities and cosmetic improvements. This means that OHCP-funds can only be used to correct sub-standard conditions. OHCP recognizes that clear distinctions between the three classifications of measures cannot always be drawn and that grantees must sometimes carefully consider and justify some measures. Having written justification in client files, along with documentation such as photographs is helpful in providing OHCP with the information that they need to understand the choices made. OHCP encourages grantees to establish policies to help ensure that rehabilitation, not remodeling and re-decorating, is the result of the program. OHCP also encourages grantees to educate owners and occupants about the intent of the rehabilitation program.

1.8 QUALIFICATIONS AND WORKMANSHIP

1.8.1 USING QUALIFIED STAFF, INSPECTORS, AND CONTRACTORS

Standard: Grantees **shall** ensure that all persons involved in applying provisions of the RRS to a rehabilitation project **shall** be qualified for their tasks. If an owner or an occupant performs rehabilitation work, the grantee **shall** ensure that the person is qualified. If the nature of the work requires personnel to be licensed or otherwise certified to perform the work, the grantee **shall** ensure that the personnel meet the requirements.

Commentary: Qualifications can be reviewed in a number of ways. Specific, documented experience, documented training and education, licensure or certification, previous personal knowledge of work quality, references, and a review of previous projects are all ways to determine whether a person or organization is qualified to carry out a specific role in a project. Grantees must use a mix of these to determine whether a person or organization is qualified for a specific task. Grantees must also monitor work quality on an ongoing basis, and remove persons from the program that are not adequately performing.

1.8.2 ENSURING QUALITY WORK

Standard: Grantees **shall** ensure that the mechanical execution of the rehabilitation work is performed in a manner consistent with principles of quality workmanship, the material manufacturer's installation instructions, applicable codes and current accepted industry practice.

Commentary: Employing qualified and experienced people is critical to the success of a rehabilitation project. Establishing sound procedures and clear standards and using quality materials aren't enough if technicians don't know what they're doing, no matter how well intentioned they may be. OHCP expects grantees to have a procedure to ensure that the people responsible for inspecting homes, preparing work specifications and actually doing the rehabilitation work are qualified and experienced. This is particularly important for work in the electrical, plumbing and HVAC trades. OHCP requires that technically demanding work be done by people who demonstrate competency in that type of work.

In addition, work involving some types of materials, such as those containing lead-based paint and asbestos, generally requires licensed personnel.

1.9 MATERIAL STANDARDS

1.9.1 NEW MATERIALS

Standard: New material **shall** be of appropriate quality, **should** be specified by the grantee in the specifications, and **shall** meet the specifications established by the referenced codes and the nationally recognized authority for the type of material installed.

1.9.2 USED MATERIALS

Standard: Used material **shall not** be installed unless the material is sound, safe, and effective. All used material **shall** be identified in the specifications and approved by the homeowner and the grantee prior to its use. OHCP encourages the use of used material within the above parameters where it will conserve natural resources (Also see the RRS 2.10).

Commentary: OHCP expects rehabilitation materials to be safe, effective and durable. At a minimum, materials must meet the manufacturing and performance specifications established by the various nationally recognized trade associations and testing laboratories such as; UL, ASTM, ANSI, GAMA, etc. OHCP also expects materials to be appropriate to their application. For example, materials rated for interior use only are not acceptable for exterior use. It is acceptable to reuse materials provided the materials are of acceptable quality, sound and functional.

CHAPTER TWO

BUILDING STRUCTURE

GENERAL REQUIREMENTS

The building structure, including the foundation and the framing, are responsible for providing the most basic elements of a house. To be effective, the building structure must accomplish the following:

- be structurally safe and sound.
- adequately protect the occupants and the building components from exterior moisture, wind, heat and cold
- provide for the safe entry of adequate sunlight and fresh air into the building envelope.
- provide for the safe exit of moisture and other contaminates out of the building envelope.
- Provide a means of conserving energy and of keeping energy costs affordable.
- provide for an adequate means of egress to allow all occupants a quick and safe exit from the building.

This combination of seemingly contradictory requirements makes this system of the house much more complicated than it would seem on the surface, and requires its interaction with most of the other house systems in order for a house to perform properly.

The structural components and the building envelope that are covered in this chapter are vital to the health and safety of the occupants and their failure generally makes the house uninhabitable. The integrity and proper operation of many of the other systems of the house are also dependent on the integrity of this system. For example a leaking roof can lead to infiltration of water, which may not only destroy the structural components of a house, but can lead to severe moisture and air quality issues inside the house.

2.1 FOUNDATIONS, BASEMENTS, CRAWLSPACES AND CELLARS

2.1.1 INSTALLATION OR REPLACEMENT OF FOUNDATIONS

Standard: The installation of all new basement, crawlspace and slab-on-grade foundations or portions of a foundation and all foundation repairs **shall** be in accordance with the applicable sections of the *RCO, Chapter 4 & RCO section R506.* Where bracing of existing walls is an appropriate measure, the repair **shall** be designed in a manner to safely support the loads that will be imposed. New crawlspaces built through the CHIP program **should** be of the enclosed conditioned kind, as outlined in the *RCO, Chapter 4, and particularly Section R408.2, exception 5*.

2.1.2 CONCRETE, STONE, TILE, OR MASONRY FOUNDATION WALLS

2.1.2.1

Standard: **Continuous foundation wall:** All houses **should** rest on a continuous foundation wall.

In cases where a continuous foundation wall is not possible, the foundation structure **shall** be adequate to support the loads imposed, and **shall** provide adequate protection from frost and from the infiltration of vermin into the structure.

2.1.2.2

Standard: **Footing:** All foundation walls **should** rest on an adequate footing that extends below the frost line or is otherwise protected from frost (*see RCO, Section R403*).

Commentary: Sometimes in older houses inadequate footing depth results in movement of a portion of a house during freeze-thaw cycles. An example of this would be on an old house where the porch has been made into a room and the door is pushed out of square by the movement of the shallow foundation during the freeze-thaw cycles. The force of this movement can be considerable and can destroy doors and other building components over time. Replacement of these components without addressing the underlying problem will only result in the new components also being destroyed. There are a number of ways to deal with shallow foundations. For example, the foundation can be dug up and rebuilt, pylons can be pushed into the ground extending below the frost line to provide support for the foundation, the level of the earth next to the foundation can be raised, or the foundation can be insulated in some way. Each of these methods may be viable and cost effective alternatives for specific situations.

2.1.2.3

Standard: **Structurally Sound:** Basement and crawlspace walls **shall** be structurally sound and without missing or deteriorated masonry, lintels or severely deteriorated mortar joints which weaken the foundation's ability to safely support the load. Serious deterioration or other observable structural defects that threaten the structural integrity of the foundation and the durability of the dwelling including collapsed or severely leaning sections of the foundation wall, missing bricks, stones or blocks, large cracks or holes through the foundation wall, severely eroded mortar joints, etc. **shall** be corrected. Repairs **shall** comply with *RRS Section 2.1.1*.

Commentary: OHCP recognizes that many older homes have foundations that are, to some extent, deteriorated or otherwise sub-standard. OHCP does not expect that all of the problems (or the causes for the problems) can be fully corrected. However, as noted above, appropriate measures to address serious problems must be taken, as necessary. Examples of such measures include replacing weakened or collapsed wall sections, installing permanent structural bracing, replacing missing or deteriorated components, tuck pointing and parging.

2.1.2.4

Standard: **Mortar joints:** All mortar joints in brick, tile, or masonry basement and crawlspace walls and control joints between concrete panels **should** be intact, without cracks or missing or deteriorated sections.

2.1.3 <u>PIERS AND COLUMNS</u>

Standard: Piers and columns **shall** be structurally sound, without missing or broken supports, and without supports that are decayed, deteriorated or otherwise unable to safely support the load. Supports **should** be of sufficient number, size, construction and location to safely support the load. Repairs **shall** comply with *RRS Section 2.1.1* and the applicable requirements of *RCO Chapter 5*.

2.1.4 WOOD FOUNDATIONS

Standard: Wood foundations **shall** be structurally sound, without missing or broken supports, and without supports that are decayed, deteriorated or otherwise unable to safely support the load. Repairs **shall** comply with *RRS Section 2.1.1*.

2.1.5 FOUNDATION WINDOWS AND ACCESS DOORS

2.1.5.1

Standard: **Foundation windows, doors, and accesses:** Openings through foundation walls (e.g. windows, doors and accesses) that are necessary for egress, light, and/or ventilation **shall** be functional, weather tight, structurally sound and provide for adequate security. New access openings **shall** be sized per *RCO Section 408.3*, or larger. Exposed bare wood or other exposed materials that are subject to decay **shall** be primed and painted or covered with a durable weather-resistant material. For basements with bedrooms or other habitable spaces, note the egress requirements at *RRS 6.6.1*.

Exception: Where there is not physically room to size a new access opening to the requirements of RCO Section 408.3, then it will be permissible to install an access opening smaller than what the RCO requires, but as large as physically possible.

2.1.5.2

Standard: **Foundation openings:** Foundation openings such as windows and old coal chutes that are not necessary for light, ventilation, or egress as described in the *ORC, Section 303, Section R408 & RRS 6.6.1*) **shall** be free from safety hazards (peeling lead-based paint, broken glass, etc.); deterioration (rotted wood, rusted through, etc); and unwanted air and moisture infiltration; and they **shall** provide for adequate security. They **shall** be replaced, repaired, or sealed up (using appropriate materials, such as concrete blocks); whichever is most cost effective.

Commentary: Unsealed openings in foundation walls are pathways for air infiltration and vermin. Foundation windows and access doors that do not have locks are a security problem. Repairs to remedy these defects include replacing missing or broken glazing, sealing gaps between the framing and the foundation, weather stripping of windows and doors that open and installing latches/locks on windows and doors that open. Fasteners used for the installation of windows, doors, and access panels must be appropriate for the location and adequate to secure these building components. Care must be given to ensure that the materials used are appropriate for their exposure to moisture and that the combination of materials used together will not result in corrosion.

The replacement of non-egress foundation windows not necessary for light or ventilation are not typically a high priority item, as they can be repaired or the opening permanently sealed. Therefore, more important health and safety items must be addressed prior to spending additional funds to replace non-necessary foundation windows when less expensive options exist.

2.1.6 FOUNDATION PERIMETER DRAINAGE AND MOISTURE CONTROL

Standard: Foundation perimeter grading **shall** be sloped away from the foundation and without depressions or other conditions that allow water to pool or drain towards the foundation.

Earth **shall** be a minimum of 6 inches away from wood framing members. Site drainage adjacent to the foundation **should** conform to RCO Section 401.3. Where severe moisture problems exist in basements, cellars or crawlspaces, additional measures **shall** be used to mitigate the problems.

Exception #1: Where it is physically impossible to slope the grade away from the foundation, other appropriate alternative methods **shall** be used to keep water from pooling or draining towards the foundation.

Exception #2: Where it is physically impossible to keep the earth 6" away from the wood framing members, other appropriate alternative methods **shall** be used to protect the wood and other decay prone building materials from the earth's moisture and from insect infestation.

Commentary: Potential alternative methods for keeping water from pooling or draining towards the foundation when sloping the grade is physically impossible may include the pouring of concrete slabs around the perimeter of the house wherever the pooling or drainage problem exists (the concrete must slope away from the house and be thoroughly caulked along the perimeter of the house); the installation of drain lines to carry the water away from the foundation; or the digging out of a trough along the wall around this portion of the house, along with the building of a low retaining wall several feet from the house to hold the exposed earth, so that a swale is created which will allow the earth to slope away from the house (often drain lines are also necessary near the retaining wall to remove the water).

Potential Alternative methods for protecting wood from the earth's moisture and from insect infestation include the provision of a physical barrier between the wood and the earth (the barrier must not trap moisture in the wood, and must be made of a tough non-decaying, non-corrosive material); or the creation of a swale as described in the paragraph above.

Appropriate additional moisture control measures may include; damp proofing of walls, installation of a foundation drainage system, installation of sump pumps, installation of adequate gutters and downspouts, a diversion of the water from the gutter and downspout system away from the foundation, and the diversion of run-off away from the foundation and its access points.

OHCP does not expect that moisture problems will be eliminated so that wet basements or enclosed crawlspaces are made completely dry. However, OHCP expects that grantees will investigate the cause of the seepage and include measures that effectively reduce the amount of moisture so that basements or crawlspace areas are dryer than before work was done.

2.1.7 ENCLOSED CRAWLSPACE VENTILATION, ACCESS, MOISTURE CONTROL

2.1.7.1

Standard: **Moisture and air Barrier/vapor retarder:** A vapor retarder such as 6 mil polyethylene **shall** be installed in each crawlspace and basement without a concrete floor. This vapor retarder **should** be without voids or gaps, and **should** overlap a minimum of 6" at the foundation wall and seams. To also act as a moisture and air barrier in the case of an enclosed conditioned crawlspace or basement, all edges, gaps and seams **shall** be sealed with an appropriate tape or sealant. Prior to installing a moisture barrier/vapor retarder, all rubbish **shall** be removed to help ensure complete coverage and to reduce the amount of moisture trapping items.

Exceptions: Crawlspaces that do not have sufficient height (i.e. 24 inches or less of continuous clearance) to allow for the installation of a vapor retarder or access, are not required to have a vapor retarder or an access. However, efforts to increase the clearance to achieve the standard **should** be made. Also, in crawlspaces where it is impossible to avoid seasonal or episodic standing water a concerted effort **shall** be made to mitigate this – (*see RRS 2.1.6*), in this case, the moisture and air barrier/vapor retarder **shall not** be sealed as described above. Also, consideration **should** be given to the connection between the living area and a crawlspace when these measures are not able to be taken, and extra efforts **should** be made to mitigate negative air quality impacts on the occupants.

Commentary: A properly installed moisture and air barrier/vapor retarder can be an important strategy to help reduce the amount of soil produced moisture which may accumulate in the crawlspace.

2.1.7.2

Standard: **Unconditioned crawlspaces:** Enclosed unconditioned (i.e. unheated or unintentionally heated) crawlspaces **shall** be ventilated, accessible, and free of excessive rubbish accumulation. New ventilation openings **should** conform to *RCO Section 408.1 & 2*. New crawlspace vents **shall** be able to be opened and closed manually.

Exception: For crawlspaces that do not have sufficient height (i.e. 24 inches or less of continuous clearance) to allow for these measures, these measures **shall not** be required.

2.1.7.3

Standard: **Enclosed conditioned crawlspaces:** Enclosed conditioned (i.e. intentionally heated) crawlspaces **shall** be accessible and free of excessive rubbish accumulation. Enclosed conditioned crawlspaces and crawlspaces with perimeter wall insulation **shall not** be ventilated. Where feasible, enclosed conditioned crawlspaces **should** be in accordance with the *RCO Section R408.2, Exception 5*. All newly built crawlspaces **should** be of the enclosed conditioned type, in accordance with the *RCO Section R408.2, Exception 5*. All newly built crawlspaces **shall** be constructed in accordance with the RCO, Chapter 4.

2.1.7.4

Standard: **Separation between conditioned and unconditioned spaces:** Separation **shall** be made between conditioned and unconditioned or unintentionally conditioned spaces in a dwelling. Access holes between the spaces **shall** be provided with a door, and the separation wall/ceiling/floor **should** be properly sealed to prevent the movement of air and moisture between the conditioned and the unconditioned spaces.

2.1.8 <u>BASEMENT, CELLAR, & SLAB-ON-GRADE FLOORS</u>

2.1.8.1

Standard: **Concrete floor required:** All basement areas that will be regularly used by the occupant **should** have a concrete floor over the section of the basement that is regularly used.

Commentary: When basement areas do not have a proper floor, this potentially creates a number of problems. The earth can be a tripping hazard, and the moisture/vapor barrier can get torn up and become ineffective. This is often exacerbated by the accumulation of stored items in these areas. Dust can be generated, furnaces, washing machines and other appliances are exposed to corrosive moisture, and a number of air quality issues can result. The lifestyle of the occupant and the use of each area need to be considered. Basements may have a number of uses including the laundering of clothes, living, sleeping, play areas, storage, etc. The intensity of use of each area, the physical ability of each occupant using the area, and the air quality of the area must all be considered, along with cost factors, in making a determination of whether a floor is required.

2.1.8.2

Standard: **Concrete floor conditions:** All concrete floors in areas used by the occupant **should** be without serious deterioration or conditions that present a falling or tripping hazard to the occupant. All new slab-on-grade foundations **shall** meet the requirements of *RRS 2.1.1*.

2.1.8.3

Standard: **Vapor Barrier required:** Dirt floors in cellars or basements which are not regularly used by the occupant, **shall** be covered with an approved moisture and air barrier/vapor retarder as described in *RRS 2.1.7.1*.

2.1.8.4

Standard: **New or replacement floor requirements:** New or replacement concrete floors **shall** conform to *RCO Section 506*, and **should** have control joints at 15' intervals.

Commentary: Where a concrete floor already exists, problems such as large cracks or missing and uneven sections must be repaired so that the floor is not a hazard to the occupant.

Where a bare dirt floor exists and the basement is regularly used (walked across several times each week) by the occupant for laundry, storage, etc., OHCP strongly recommends that a concrete floor be installed. Covering exposed dirt floors with a vapor retarder will decrease the level of humidity and the amount of moist air entering the house. If the basement has more than one room, then only the rooms that are regularly used are required to have a concrete floor.

2.2 FLOOR CONSTRUCTION, FRAMING AND SUB-FLOORS

2.2.1 NEWLY FRAMED FLOORS

Standard: All new floor system construction **shall** conform to the *RCO Sections 501, 502, and 503*.

2.2.2 FLOOR INTEGRITY

Standard: The floor structure **shall** be sound and able to support the loads imposed on it. Badly sagging floors, more than a few inches out of level, **should** be provided with additional support, and an effort **should** be made to make them more level.

Floor joists, band boards, headers, girders, support columns, bridging, sheathing, underlayment, and etc. **shall** be structurally sound and without decay or deterioration that weakens the floor's ability to safely support the load. Defects in the floor framing such as; rotted, broken, inadequate, or missing joists, headers, bridging, girders and girder support columns, etc. **shall** be corrected. Repairs **should** conform to the *RCO Sections 501 and 502*.

2.2.3 CUTTING NOTCHING, AND BORING

Standard: Structural floor members **shall** not be cut, bored or notched in a way that compromises the integrity of the structural members. Where this has been the case, additional support or modifications to return the structural integrity of the floor **shall** be provided. All cutting, boring and/or notching that is done during work on the project **shall** be within the limitations specified in the *RCO Section 502.8*.

2.2.4 FLOOR SHEATHING

Standard: Defects in the sub-floor such as deteriorated, loose or weak sheeting or underlayment **shall** be corrected. New sheathing installations **shall** conform to *RCO Section 503 and the manufacturer's installation instructions*.

Commentary: Deteriorated and weakened floor framing and sub-floors can be the result of poor initial construction, careless renovating, damage caused by water and/or wood boring insects or problems with the foundation. These conditions can compromise the dwelling's structural integrity and constitute a potential safety hazard. Consequently, OHCP expects such conditions to be thoroughly inspected and appropriate corrective measures taken.

OHCP does not expect floors to be made completely level. However, severely sloped or uneven floors need to be repaired so that hazardous conditions are eliminated. Also, floors need to provide a reasonably flat, even, horizontal surface to the interior of the dwelling.

2.2.5 FLOOR COVERING

Standard: Floor covering materials **shall** be appropriate to the use of the space and without defects that present serious tripping or other safety hazards to the occupants. New floor covering materials **shall** be installed according to the *manufacturer's installation instructions*.

Exception: Floor coverings that are merely dirty or slightly worn, but still effective and safe, **shall not** be replaced.

2.2.6 FLOORING IN KITCHENS AND BATHS

Standard: **Flooring in kitchens and baths:** Replacement floor covering materials for kitchens, bathrooms, above grade laundry/utility rooms and other rooms with plumbing fixtures **should** be water resistant.

Commentary: New floor coverings must only be installed because the existing covering is a hazard, obviously ineffective, because the sub-flooring has been replaced, or because other work within the house requires it (for example, changing the size of the room). OHCP recommends that replacement floor covering materials are selected for durability, safety and ease of maintenance.

2.3 WALL CONSTRUCTION

2.3.1 NEWLY CONSTRUCTED WALLS

Standard: All new wall systems **shall** conform to the *RCO, Chapter 6*.

2.3.2 FRAME WALL CONSTRUCTION

Standard: Wall framing, including studs, top plates, headers, sole plates, etc., **shall** be structurally sound and without missing, broken, decayed or deteriorated framing members that weaken the wall's ability to safely support the load. Repairs to wood framed walls **shall** conform to the *RCO Sections 601 and 602*.

2.3.3 CUTTING, NOTCHING, AND BORING

Standard: Structural wall members **shall** not be cut, bored or notched in a way that compromises the integrity of the structural members. Where this has been the case, additional support or modifications to return the structural integrity of the wall **shall** be provided. All cutting, boring and/or notching that is done during work on the project **shall** be within the limitations specified in the *RCO Section 602.6 and 602.6.1*.

2.3.4 MASONRY WALL CONSTRUCTION

Standard: Masonry walls **shall** be structurally sound and without missing or broken sections, severely deteriorated mortar joints or other defects which weaken the wall's ability to safely support the load. To the extent possible, repairs to masonry walls **shall** conform to the *RCO Sections 601 and 606-609*.

Commentary: Deteriorated and weakened framing and masonry walls can be the result of poor initial construction, careless renovating, damage caused by water and wood boring insects, or problems with the foundation. These conditions can compromise the dwelling's structural integrity and constitute a potential safety hazard. Consequently, OHCP expects such conditions to be thoroughly inspected and appropriate corrective measures taken.

2.3.5 EXTERIOR WALL COVERINGS

Standard: Exterior wall coverings, including siding, window and door trim, eaves, soffits, brick or stone veneer, etc., **shall** be structurally sound, secure and weather tight without broken, missing or deteriorated surfaces. Exposed bare wood or other exposed wall covering and trim materials (including the window and door trim, eaves, soffits, rake board, etc.) which are subject to decay, **shall** be primed and painted or covered with a durable weather-resistant material. New untreated wood **should** be primed on all six sides prior to installation.

Where paint or stain is used as the protective coating, it **shall** be applied as directed by the manufacturer. Mortar joints that are in a deteriorated condition **should** be repaired (See the National Park Services Preservation Brief on "Repointing Mortar Joints" for useful information on developing specifications for this purpose.) Masonry that is in very poor condition, with mortar joints that are in a severely deteriorated condition and/or missing bricks, stones, etc. **shall** be repaired or replaced. Replacement exterior wall covering materials **shall** be installed to conform to *RCO Sections 701 and 703 and the manufacturer's installation instructions*. Wall covering and trim materials that are in adequate condition (i. e., the surface and finish are consistent and are not deteriorated); are not required to be replaced for another reason outlined somewhere in the RRS; and do not present a lead-based paint hazard; **shall not** be covered or replaced with a new material. When minor deterioration exists, grantees **should** repair only the deteriorated areas rather than replacing the entire exterior wall covering. All exterior surfaces **shall** be free of lead-based paint hazards as outlined in the *RRS, Chapter 7*.

Commentary: OHCP does not expect the exterior surface of the walls to be completely without blemish. However, all defects or deterioration that would allow the elements to enter the structure, and all rotted materials must be properly addressed. The exterior wall covering is important because it is the barrier that protects the interior support components and interior surfaces from weather damage. Exterior wall coverings also impact the visual appearance of the home and, on homes where exterior wall coverings can be covered with a new material, there may be a tendency to do so. OHCP expects grantees to carefully consider the reasons for installing new wall coverings.

2.3.6 INTERIOR WALL AND CEILING COVERINGS AND SURFACES

Standard: Interior wall and ceiling coverings in habitable spaces **shall** form a continuous durable surface without large holes or wide cracks penetrating through the covering, without severe deterioration and without missing sections of non-cosmetic trim, window or door casing (trim necessary for air sealing or structural integrity). Large cracks and holes (i.e. penetrations through the wall covering material exposing wall construction materials or cavities) **shall** be repaired. Also, sagging or loose wall and ceiling covering materials **shall** be repaired or replaced. Cosmetic trim **should** be replaced, and small penetrations through the wall and ceiling surfaces **should** be filled. Repair materials **should** be compatible in composition and finished appearance to the original surrounding materials. New interior wall and ceiling covering materials and trim **shall** be installed to conform with the *RCO Sections 701 and 702 and the manufacturer's installation instructions*.

Commentary: OHCP does not expect interior wall and ceiling surfaces to be free from all cracks, holes or other imperfections. Plaster or wallboard surfaces in older homes often have defects and it is not reasonable for a rehabilitation program to make these surfaces appear like new. Surface cracks, uneven surfaces and other minor defects on otherwise solid walls and ceilings do not need to be repaired.

2.3.7 SEPARATION BETWEEN ATTACHED GARAGE AND LIVING SPACE

Standard: The garage **should** be separated from the residence and its attic area by not less than ½" gypsum wallboard, taped and sealed, and applied to the garage side. Garages beneath habitable rooms **should** be separated from all living space above by not less than 5/8", Type X, taped and sealed, gypsum wallboard. This includes covering of all structural elements. All new work to garage areas **shall** be in conformance with the *RCO, Section 309*.

Commentary: Carbon monoxide, fumes from potentially spilled fuel, and fire are dangers associated with garages, and measures need to be taken to ensure that the occupants are protected from these hazards.

2.3.8 SEALING OF SURFACES

Standard: Raw plaster, wallboard, joint compound, and bare wood **shall** be primed or sealed to protect the surface and to make it cleanable. Wall and ceiling surfaces that have been replaced in high moisture areas, such as bathrooms containing bathing/shower spaces, **shall** be smooth and non-absorbent. All interior surfaces **shall** be free of lead-based paint hazards as outlined in the *RRS, Chapter 7*.

2.4 WINDOWS AND DOORS

2.4.1 WINDOWS OPERABLE

Standard: Each habitable room that contains a window **shall** have at least one window that is openable and in operating condition, capable of being held in the open position by the window hardware.

Openable windows **shall** have functioning security hardware and insect screens. Bedroom or sleeping room windows which are intended to serve as emergency escape and rescue openings **shall** meet the requirements of *RRS Section 6.6.1*.

2.4.2 STRUCTURAL SOUNDNESS

Standard: All windows **shall** be structurally sound, secure and weather tight without deteriorated components (e.g. sashes, jambs, sills, trim, etc.) and without missing, broken or severely cracked glazing. Exposed bare wood and other exposed materials which are subject to decay shall be primed and painted or covered with a durable weather-resistant material.

All windows **shall** be free of lead based paint hazards as outlined in the *RRS Chapter 7.* Windows that are sound and functional, do not present a lead-based paint hazard, and for which an energy audit (*as recommended in RRS 2.6.2, and described in Appendix 2-A*) does not show replacement to be a cost effective means of reducing energy costs **shall not** be replaced.

2.4.3 REPLACEMENT WINDOWS

Standard: Replacement window units **shall** meet the requirements of the *RCO Section 613* and shall be installed according to the *manufacturer's installation instructions*. Storm windows **shall not** be installed over replacement window units.

Commentary: The condition of the windows can have a significant effect on the appearance of the home and owners might routinely expect windows to be replaced. Consequently, the desire to improve the home's appearance and satisfy the owner's expectations could create a tendency to replace older windows. OHCP expects grantees to carefully consider the reasons for replacing windows. Under most circumstances, energy efficiency alone is not a cost-effective criterion because the cost of the new window greatly exceeds the value of the savings.

2.4.4 EXTERIOR DOORS

Standard: Passageways between the interior conditioned spaces of the dwelling and the outside **shall** have an exterior-rated door. Doors to attached garages **shall** comply with the *RCO Section 309.1*. All exterior doors **shall** be structurally sound, easily operable, weather tight and fitted with functioning hardware that tightly latches and securely locks the door. Locks **shall not** require a key for exiting from the interior as per the *RCO, Section 311.4.4*. Exposed bare wood and other exposed materials which are subject to decay **shall** be primed and painted or covered with a weather-resistant material. Replacement doors **shall** be installed according to the *manufacturer's installation instructions*. Doors that are sound and functional, and that do not present a lead-based paint hazard **shall not** be replaced.

Commentary: As with windows, exterior doors can have a significant effect on the appearance of the home and on the homeowner's expectation of the rehabilitation program. The desire to improve the home's appearance and meet the owner's expectations could create a tendency to replace exterior doors. OHCP expects grantees to carefully consider the reasons for replacing doors. In general, doors that are sound and functional need not be replaced. If minor repairs or weather stripping are needed, repairing or replacing only the defective parts is preferred over replacing the entire door, unless replacing the entire door is justified as more cost-effective.

2.4.5 INTERIOR DOORS

Standard: Bathrooms, bedrooms, utility rooms/enclosures which contain fuel-burning non-direct vent space heating or water heating equipment, and passageways leading to unconditioned spaces within the dwelling (e.g. attics, basements, enclosed porches, etc.) **shall** have a door. All interior doors **shall** be structurally sound, easily operable and fitted with functioning hardware that tightly latches the door. Doors to unconditioned spaces **should** be weather stripped.

Commentary: A door to a bedroom and a bathroom is necessary for privacy. A door to a utility room/enclosure containing non-direct vent combustion equipment is necessary to separate the equipment from the living space while providing an access for maintenance and repairs. Otherwise, the area around the equipment may become used for storage, thus creating a potential fire hazard or potentially restricting the supply of combustion air. However, confined space issues need to be considered when adding a door to a room containing non-direct vent combustion equipment. The door may need to be louvered, or another means may need to be found to introduce combustion air into the space. Weather stripping doors which lead to unconditioned spaces will help reduce the air movement between heated and unheated areas.

2.5 ROOF AND CEILING CONSTRUCTION, ATTICS & ROOF DRAINAGE

2.5.1 ROOF & CEILING CONSTRUCTION

2.5.1.1

Standard: **Newly constructed roof/ceiling assemblies:** All new roof/ceiling assemblies **shall** conform to the *RCO, Chapter 8*.

2.5.1.2

Standard: **Roof and ceiling framing:** The roof/ceiling structural system, including trusses, rafters, ridge beams, collar ties, knee walls, ceiling joists, top plates, sheathing, etc., **shall** safely support the loads imposed, including the appropriate snow load. Framing members and sheathing **shall** be structurally sound, properly fastened together and secured to the walls, and form a sound base for attaching the roof covering material. The roof/ceiling structural system **shall** be configured so that drainage slopes towards a perimeter edge of the dwelling into a controlled water collection and discharge system. Problems such as deteriorated, missing or loose framing or sheathing **shall** be corrected. Roof structures incapable of safely supporting the load or providing adequately sloped drainage **shall** be repaired or replaced. Repairs and replacements **shall** conform to the *RCO, Chapter 8*.

2.5.1.3

Standard: **Sagging Roofs:** Severely sagging roofs **should** be repaired or replaced. See the notes in the commentary below.

Commentary: The structural integrity of the roof/ceiling framing system is critical to the long-term durability and habitability of the structure. Therefore, it must be inspected to determine if repairs are necessary. Sometimes the roof/ceiling framing system of older homes have sagged and settled over time due to age, the use of undersized lumber and/or questionable initial workmanship. For example, a ridge beam might have sagged because of a lack of collar ties or the rafters have sagged because the lumber was too small. In such cases, OHCP does not expect all of the defects to be corrected so that the roof/ceiling framing system is perfectly straight and level. However, in such cases OHCP expects that grantees will make repairs necessary to stabilize the structure in order to prevent future deterioration and to provide for a relatively even surface for the roof covering.

2.5.2 ATTIC SEALING & VENTILATION

2.5.2.1

Standard: **Attic ventilation:** Ventilation in unconditioned attic air spaces (including enclosed attics, open joist attics and enclosed rafter cavities), where feasible and necessary, **shall** conform to the *RCO Section 806*. To ensure the free flow of air from eave or cornice vents, baffles or other blocking **shall** be installed, as necessary, to prevent insulation from covering the vent openings.

2.5.2.2

Standard: **Attic air sealing:** The building envelope separating the conditioned living space from the unconditioned attic space **should** be properly air sealed as outlined in *RRS 2.8.1*. All attics without any existing insulation **shall** be air sealed prior to installing insulation. All attic access doors **should** be weather stripped air tight. Where there is evidence of too much heat and moisture in the attic, such as mold, water staining, premature deterioration of shingles, etc. air sealing **shall** be done.

Commentary: Providing air circulation is a strategy to help protect the roof/ceiling framing members (and the roof covering materials) from heat and moisture damage. Proper air sealing to prevent warm moist air from entering the attic space in the first place is also a primary strategy (see *RRS Section 2.8.1*).

2.5.3 ATTIC ACCESS

Standard: Attic spaces with an area of at least 30 square feet and a clear height of over 30 inches that do not have a means for entrance **should** be provided with an access. New access openings **should** be sized to conform to RCO Section 807 (i.e. at least 22" x 30").

Commentary: Entrance to attic spaces is necessary for completing various rehabilitation measures and for inspecting those measures. Accesses are ideally constructed so that entry is from the interior of the dwelling, however, access through a removable gable end vent or other openable means is an acceptable alternative. Where there is reason to believe that there are problems within an attic space that need corrected (i.e. staining or curling shingles indicating excessive heat or moisture buildup) ensuring access becomes even more important.

2.5.4 ROOF COVERINGS

2.5.4.1

Standard: **General requirements:** Roof coverings **shall** provide a waterproof barrier protecting the roof/ceiling structural system and the interior building surfaces from moisture damage. Roof coverings; including valley flashing and flashing against walls, chimneys, stacks and pipes **shall** be watertight, durable and free from excessive wear and obvious defects in materials and workmanship. Problems such as evidence of severe deterioration (e.g. curled/cracked asphalt shingles, severely corroded metal or moss growth), missing, loose or ineffective or inappropriate materials **shall** be corrected.

2.5.4.2

Standard: **Flashing, drip edge, low slopes:** Roof covering repairs and replacements **shall** conform to the manufacturer's installation instructions and to RCO Chapter 9. In addition, when the flashing and roof covering materials are replaced, the following materials and practices **shall** be used:

a. Metal flashing material **shall** be inspected for corrosion and other defects. Their replacement, when necessary, including the appropriate methods and materials, **shall** be specified in the scope of work. The materials and methods **shall** conform to the material specifications and installation requirements of the *RCO Section 905.2.8*.

b. Metal drip edge **shall** be installed along all eaves and rakes.

c. Where the roof slope is between 2/12 and 4/12 and where the average daily January temperature is 25 degrees F or less, multiple layer underlayment or other specialty materials **shall** be used to protect against ice and water damage as described in the *RCO Section 905.2.7 and 905.2.7.1*, or materials specially designed for low slope roofs **shall** be used.

d. The type of roofing materials selected for the given slope and application **shall** conform to the *RCO, Chapter 9*.

Commentary: The ability of the roof covering materials to shed water is critical to the long-term durability and habitability of the dwelling. Therefore, the roofing materials must be thoroughly inspected to determine if repair or replacement is needed. In lieu of observable criteria for determining the need to replace a roof, OHCP recommends that grantees establish other criteria such as the estimated useful life remaining for the materials and/or a comparison of the cost to repair the roof versus the cost to replace it.

2.5.5 GUTTERS AND DOWNSPOUTS

Standard: Gutters and downspouts **shall** be properly sized, positioned, connected and secured to the structure so that roof drainage is collected and discharged without obstruction. Defects in the gutter system such as; missing, damaged, undersized, leaking, blocked, improperly sloped or loose gutters and downspouts **shall** be corrected. A gutter **shall** be installed at the bottom edge of each roof slope and there **should** be at least one downspout for each 600 square feet of roof drainage area, or an alternative, such as an oversize gutter and downspout, **shall** be provided. If permitted by local code, downspouts **should** be connected to an approved functional in-ground drainage system. If connection to an approved functional in-ground drainage system is not possible, downspouts **shall** be brought to grade level and, by extension or splash block, direct the water away from the foundation for a distance as close to 3 to 5 feet as possible. To minimize the accumulation of leaves in the gutter trough, a screen or other shielding product may be installed, as needed. Replacement of gutter and downspout systems **shall** conform to the manufacturer's installation instructions.

Commentary: The controlled collection and discharge of rain water run-off is an important strategy to help control foundation moisture problems. Therefore, the gutter system must be inspected to determine if repair or replacement is needed.

2.6 BUILDING SHELL ENERGY EFFICIENCY

2.6.1 INSULATION OF THERMAL BOUNDARY IN NEW HOMES

Standard: The thermal boundary of new construction dwellings and room additions **shall** be insulated in accordance with *this section of the RRS and applicable sections of the IECC*. Insulation **shall** be installed in accordance with the *manufacturer's installation instructions and this section of the RRS*. In addition, all new construction dwellings **should** comply with all Energy Star requirements. For existing houses,

2.6.2 PRE-EXISTING INSULATION

Standard: Pre-existing insulation **should** provide uniform and complete coverage. Gaps in the coverage of existing insulation **shall** be filled so that the area achieves a uniform thermal value.

Commentary: While adding insulation to uninsulated areas is almost always cost-effective, there are circumstances when the cost-effectiveness of adding insulation isn't clear. Examples of such circumstances include; when some insulation already exists, when the cost to install the insulation is extremely high, when the area to be insulated is extremely small or when the cost of heating the space is extremely low. The factors which affect the balance between cost and savings should be examined. Methodology to calculate cost-effectiveness based on "simple payback" is provided in *RRS Appendix 2-B*. For determining a reasonable payback period, OHCP recommends a payback period of three to five years. Calculating a simple payback is also useful for prioritizing insulation measures when overall job cost is an issue. For example, a measure which produces a savings equal to its cost within a three to five year period should be prioritized over measures which "payback" over a longer period.

For the majority of older uninsulated frame homes the prioritized list of insulation measures would typically be attics first, sidewalls second and floors/perimeters third. It can be valuable to conduct an energy audit prior to making any energy related modifications, such as the modifications outlined in the bullets below. Based upon this analysis and the project budget, those measures that are most cost effective in reducing energy costs and in improving occupant comfort can be selected for integration into the rehabilitation scope of work and could include the following:

- Insulation of attics/ceilings
- Insulation of knee walls
- Insulation of sidewalls
- Insulation around openings (doors/windows, etc)
- Insulation of the building perimeter (band joists, etc.)
- Insulation of the floor
- Insulation of the foundation
- Air sealing of holes gaps and/or cracks in and around the building envelope
- Sealing and/or insulating of ductwork
- Replacement of doors and/or windows
- Replacement of outdated and/or inefficient air/water heating equipment.
- Replacement of outdated and/or inefficient appliances.

2.6.3 UNCONTROLLED AIR MOVEMENT

Standard: Uncontrolled pathways (i.e. holes, cracks, chase ways, etc.) and controlled pathways (i.e. exhaust fans) which exchange conditioned and unconditioned air **should** be addressed. Also see specific air sealing requirements for attics, RRS 2.5.2.2. Where air sealing is done, the following guidelines apply.

Holes, gaps, chase ways and other paths connecting the conditioned spaces of the dwelling and its unconditioned spaces or to the outside need to be sealed in order to reduce the uncontrolled movement of air and moisture into and out of the conditioned spaces.

Priority **should** be given to sealing air leakage sites that present the greatest potential for heat loss and moisture migration due to natural and mechanically driven air pressure differentials. Priority air leakage sealing sites are often those that are located low and high on the building's elevation or that connect areas within the building that are low and high on the building's elevation, and thus significantly contribute to "stack effect" air movement. Materials used for air sealing must be durable and air impermeable, such as; quality caulks, foam sealants, mastics and plastic or spun polymer sheeting. In lieu of blower door directed air-sealing, the following routine air leakage measures **should** be completed:

a. Sealing holes, gaps and cracks through the exterior building shell that connect to the dwelling's interior such as; gaps in and around utility lines, coal chutes, foundation materials, band boards, sill plates, windows and doors, etc.

b. Sealing holes and open pathways inside of the building that connect conditioned areas to unconditioned areas or to the outside such as; plumbing, HVAC, electrical and chimney chase ways, undampered fireplaces, open chimney flues or clean-outs, open partition walls, open top and sill plates, joist cavities under knee walls, etc. Air leakage sites that are located in areas that contain pre-existing insulation **should** be sealed. Air leakage sites that are located in areas that are to be insulated **should** be sealed prior to installing the insulation.

c. Sealing holes, gaps and cracks in and around interior wall and ceiling surfaces particularly between conditioned and unconditioned areas, in high moisture areas and in ceilings above drop ceiling panels such as; gaps around attic accesses and ceiling exhaust fans, and covering holes in the plaster or drywall above drop ceilings. If electrical, HVAC or plumbing work creates new holes or chase ways, air leakage sealing **should** be done after the mechanical systems work is completed.

Rehabilitation measures **shall not** create conditions of accelerated deterioration from moisture condensation to the home or pose a negative affect on the health of the occupant's post-rehabilitation air movement ventilation rates **should** not be less than the ASHRAE standard of 15 cfm per person or .035 air changes per hour. If these building tightness limits are exceeded, or in extreme environments that contain several contributing moisture factors, installing controlled ventilation devices **should** be considered. For specific Indoor Air Quality requirements, refer to *RRS Section 6.7.2.*

Commentary: Controlling air movement and reducing convective heat loss is an important factor in increasing the occupant's comfort level, reducing the dwelling's energy consumption and improving the dwelling's durability. Therefore, the dwelling must be thoroughly inspected to locate the air leakage sites. OHCP recommends that the inspection include blower door tests and pressure measurement tests to locate the leakage sites, quantify the problem and determine the extent of the air-sealing needed to reduce the leakage to an acceptable level relative to the homes volume, number of occupants, and the lifestyle of the occupants.

Sealing air leakage sites is an important factor in controlling moisture and contaminate levels in conditioned air spaces. The rehabilitation measures must be designed to minimize the amount of moisture and contaminates, and to allow for adequate, but not excessive ventilation.

Sources of moisture and contaminates in the air (i.e. combustion appliances, attics, crawl spaces, slab foundations, aquariums, houseplants, air conditioners, and inadequate use of exhaust fans, etc.) should be considered when air sealing. Inadequate ventilation can increase indoor pollutant levels by not bringing in enough fresh air to dilute emissions from indoor sources and also create conditions for accelerated growth of mold and mildew. High humidity in a building's structural cavities can also lead to peeling paint, wood decay and eventually structural failure. Yet many older homes have ventilation levels far exceeding that required for fresh air ventilation. This causes discomfort to the occupants, can introduce contaminates from the outside, and decreases energy efficiency and affordability.

2.6.4 CONTROLLED AIR MOVEMENT (MECHANICAL VENTILATION DEVICES)

Standard: Mechanical ventilation to the outside of the structure **shall** be installed for all bathrooms and other rooms or areas that contain a bathtub and/or shower. If no openable window exists in the kitchen, or if it is required by code, then mechanical ventilation **shall** be installed. Otherwise mechanical ventilation **should** be installed in the kitchen. All clothes drying appliances **shall** be properly vented. Existing kitchen, bath and dryer exhaust fans that are undampered **shall** be fitted with a damper (or replaced with a dampered exhaust fan) so that the exhaust opening is closed when the fan is not operating.

Kitchen range exhaust fans and clothes dryer vents **shall** be connected to smooth-walled non-combustible duct running the most direct, shortest feasible route through the structure directly to the outside air. Ducts made of combustible material, ribbed ducts, sagging ducts or ducts that terminate in the vicinity of a crawlspace or roof vent or that exit within three feet of the building's eaves **shall not** be allowed. Exhaust duct sections **shall** be securely fastened together (dryer vents **shall** be fastened without screws) and securely supported to prevent disconnection, sealed and, where in unconditioned spaces, insulated, to prevent air leakage and condensation.

Bathroom exhaust fans shall be connected to approved smooth-walled duct running the shortest feasible route through the structure directly to the outside. Sagging ducts, ducts that terminate in an attic or in the vicinity of a roof vent or that exit within three feet of the building's eaves **shall not** be allowed. Exhaust duct sections **shall** be securely fastened together and securely supported to prevent disconnection, sealed and, where in unconditioned spaces, insulated to prevent air leakage and condensation. Mechanical ventilation devices **shall** be installed in accordance with the manufacturer's installation instructions.

Existing dryer exhaust vents and range hoods **shall** conform to *the RCO Sections 1501 and 1502*. Existing bathroom mechanical ventilation systems **shall** conform to *the RCO Sections 303.3 and 1506*.

Newly installed bathroom exhaust fans **shall** be able to move enough air for 8 air changes per hour. A formula to use in sizing an intermittent bathroom exhaust fan is cfm = volume of the room in cubic feet/7.5. This will give you the minimum size for the exhaust fan in cubic feet per minute of air moved (cfm). All replacement or new exhaust fans **shall** be a maximum of **2.5** sones. The fan **should** be installed in a manner that will encourage the occupants to use it and to leave it on long enough to be effective, for 20 minutes to an hour after showering.

Some suggested methodologies are listed below:

- Put the fan on a humidistat so that it automatically goes on when moisture levels in the room are high (Since fans are designed to eliminate moisture, this is a very straightforward approach).
- Put the fan on the same switch as the light or on a motion sensor and add a delayed fan shut-off so that the fan stays on after the light is switched off or the person leaves the room.
- This final option only works if the client uses it, so is less desirable, but can possibly work with some client education. Put the fan on an electronic timer (not a loud mechanical timer), and teach the clients to always turn it on.

Commentary: Bathrooms, in particular, are notorious for having peeling or bubbling paint, deteriorated wood trim and plaster/drywall, and mold/mildew problems. These problems are associated with excessively high moisture content in the air and can lead to structural issues and poor indoor air quality. Providing a means for controlled ventilation can be an important strategy for reducing interior humidity and improving indoor air quality. For specific room ventilation requirements, see RRS Section 6.2.2.

2.6.5 CEILING (ATTIC) INSULATION

Standard: All existing accessible attic floors (open joist cavities) **shall** be insulated to R-38 (see air sealing requirements at 2.5.2). Ceilings located between conditioned and unconditioned spaces in existing dwellings **should** be insulated as close as possible to the following standards.

LOCATION	INSULATION VALUE	TYPES OF INSULATION
Open Joist Cavities (floor collar beam & drop soffits areas)	R-38	All Types
Enclosed Joist Cavities, or Enclosed Rafter Cavities, or Enclosed Knee wall Cavities/floors	3.25 to 3.75 lbs/cu.ft. 1.6 lbs/cu.ft.	Blown Cellulose Or Blown Mineral/Glass
Open Knee wall Cavities, or Drop Soffits Walls	R-13 to R-19	Batt
Access Hatch Covers	R-38	Batt or Rigid Board
Access Doors	R-13 to R-19	Batt or Rigid Board
Knee wall Flats	R-38	All Types
Slopes	3.25 to 3.75 lbs/cu.ft. 1.6 lbs./cu.ft.	Blown Cellulose or Blown Mineral/Glass

Ceilings located between conditioned and unconditioned spaces in new construction and room additions **shall** be insulated in accordance with *the IECC*. Ceiling insulation **shall** be installed according to the manufacturer's installation instructions and the IECC. The insulation **shall** be installed to provide complete and uniform coverage. Voids or gaps in the insulation (particularly batt insulation) or areas with shallow amounts of insulation **shall not** be allowed.

In addition, ceiling insulation **shall** be installed according to the following practices:

a. Items stored in the attic **shall** be removed during the insulation process. Covering items with insulation **shall not** be allowed.

b. Electrical junction boxes in attics with no existing insulation **shall** be flagged above the level of the new insulation so that they can be easily located.

c. Heat producing devices **shall** be blocked off to prevent contact with the insulation. For example, blocking shall be installed around ventilation fans, non-IC rated recessed light fixtures and active chimneys and metal flues. Exhaust vents shall conform to *the RRS Section 2.6.5*.

d. Horizontal attic accesses **shall** be blocked off or dammed around with rigid materials to prevent insulation from entering the access opening. The dam **shall** be constructed of materials capable of supporting the weight of an adult and extend above the level of the insulation.

e. Attic access doors and stairwells **should** be insulated.

f. Baffles or chutes **shall** be installed to prevent insulation from contacting the roof deck or blocking eave/cornice vents.

Commentary: Insulating ceilings (or attic spaces) is one of the most cost-effective measures to increase the dwelling's energy efficiency and decrease the occupant's heating/cooling energy consumption in the long term. Properly installed, ceiling insulation (along with proper air sealing) will provide the occupant with decades of improved comfort and savings. Therefore, every effort must be made to thoroughly insulate ceilings over each conditioned area of the dwelling, including open joist attics, knee walls, knee wall floors, knee wall slopes, enclosed attics, shed roofs, etc. As noted above, properly insulating ceiling areas requires a thorough inspection to locate and seal uncontrolled air leakage pathways and to locate and address heat producing mechanical devices and other potential problems that can compromise the effectiveness of the job. Also, a thorough post-installation inspection is needed to ensure that the insulation coverage is complete and meets the required R-value(s).

2.6.6 SIDEWALL INSULATION

Standard: Sidewalls that separate conditioned spaces from the outside or from unconditioned spaces in existing dwellings **should** be insulated as close as possible to the following standards:

LOCATION	INSULATION VALUE	TYPE OF INSULATION
Enclosed Wall Cavities	3.25 to 3.75 lbs/cu.ft. or 1.6 lbs/cu.ft.	Blown Cellulose or Blown Mineral/Glass
Open Wall Cavities	R-11 to R-19	Batt

Sidewalls that separate conditioned spaces from the outside or from unconditioned spaces in new construction and room additions **shall** be insulated in accordance with *the IECC*.

Sidewall insulation **shall** be installed according to the *manufacturer's installation instructions and the IECC*. In addition, blown-in type insulation **shall** be installed according to the following practices:

a. Drilling through wood shakes, fiberboard, steel, aluminum or vinyl exterior wall covering materials **shall not** be allowed. Wood lap siding **should** also be removed rather than drilled through. Instead of drilling through exterior wall covering materials, the materials which can be feasibly removed **shall** be removed prior to accessing the wall cavity and then re-installed after insulating. If removal is not practical, interior wall surfaces **should** be drilled and then properly repaired and sealed after insulating.

Note: Drilling through interior wall surfaces creates dust and techniques to minimize the creation of dust and to contain it **shall** be used. Also, if the wall surface to be drilled contains Lead-Based Paint, then, Lead-Based Paint safe work practices **shall** be required.

b. If each wall cavity is drilled with one hole per story, the insulation **shall** be installed through a tube to ensure that it reaches the top and the bottom of the cavity. If two holes per cavity are drilled, tubing is unnecessary, however, the distance between the holes **shall** not exceed 5 feet. In either case, each cavity **shall** be probed to locate fire stops or other obstructions and additional holes drilled as needed.

c. The insulation **shall** be installed to achieve "compaction" or a density sufficient to prevent the insulation from settling and to prevent air movement within the cavity.

d. If interior-generated moisture is a concern, pathways that allow warm moist air to enter the wall cavities **shall** be sealed and interior perimeter wall surfaces **shall** be painted with vapor diffusion retarder paint.

Commentary: Sidewall insulation, like ceiling insulation, is one of the most cost-effective energy efficiency measures providing long term comfort and savings. Again, every effort must be made to thoroughly insulate the exterior sidewalls on frame constructed dwellings. As noted above, considerable care is needed installing blown-in type insulation in order to achieve complete coverage and proper density. Also, a thorough post-installation inspection is needed to ensure that the job was done properly.

2.6.7 FLOOR INSULATION

Standard: Floors above open crawlspaces and unconditioned enclosed crawlspaces and cellars in existing dwellings **should** be insulated as close as possible to an R-19. Floors above open crawlspaces and unconditioned enclosed crawlspaces and cellars in new construction and room additions **shall** be insulated in accordance with *the IECC*. The insulation **shall** be installed according to *the manufacturer's installation instructions, and the IECC*. There **shall** be complete coverage, particularly around cross bracing, and the insulation **shall** be firmly supported and not overly compressed.

Commentary: OHCP understands that in existing dwellings not all floors over unconditioned spaces can be insulated. For example, some crawlspaces and cellars may be too low to provide an adequate working space (e.g. less that 24 inches of continuous clearance). Floors above unconditioned basements are not required to be insulated because, in many cases, unconditioned basements contain heating equipment and heat distribution ducts or pipes, and are not ventilated or otherwise open to the outside like crawlspaces.

2.6.8 FOUNDATION PERIMETER WALL INSULATION

Standard: Crawlspace foundations and basement foundation perimeter walls in existing dwellings **should** be insulated.

Enclosed, conditioned crawlspace foundations and basement foundation perimeter walls in new construction and room additions **shall** be insulated in accordance with *the IECC*. The insulation **shall** be installed according to *the manufacturer's installation instructions, and the IECC*.

Commentary: Insulation around an existing foundation is not required in all cases. In some circumstances, its cost-effectiveness is doubtful, particularly if the interior temperature of the basement or enclosed crawlspace is low to begin with. In other cases, such as when a crawlspace is ventilated so that there is no temperature difference between the outside and the inside, foundation insulation is clearly not cost-effective.

2.7 ATTACHED STRUCTURES: EXTERIOR PORCHES, BALCONIES, AND UNINHABITABLE ADDITIONS

Standard: Foundations, walls, floors, roofs and active electrical system devices of attached porches, balconies and uninhabitable additions **shall** meet the requirements of the appropriate section of *the RRS*. Porches, balconies or raised floors located more than 30 inches above the floor or grade **shall** have guardrails. New guardrail details and size **shall** conform to *RCO Section 312*. The floors **shall** be even, and without tripping hazards, and the entire structure **shall** be free of deterioration. Bare wood **shall** be properly sealed and all lead-based paint hazards **shall** be properly addressed in accordance with *the RRS, Chapter*

Exception #1: To control costs, grantees can choose not to correct all of the sub-standard conditions related to attached structures, and this is acceptable. However, all conditions presenting a threat to the health and safety of the occupants or the durability of the dwelling **shall** be corrected.

Exception #2: To control costs, grantees have the choice of demolishing a severely deteriorated attached structure rather than rehabilitating it, provided the structure is not critical to the occupant's use of the dwelling and that demolition does not violate the historical or architectural integrity of the dwelling. Prior to demolition, grantees **shall** obtain written permission from the owner and, if necessary, from the appropriate state/local authority having jurisdiction over historical or architectural matters. A copy of each written permission form **shall** be maintained in the case file. If an attached structure is removed, the area(s) of the dwelling or site to which the demolished structure was attached or located **shall** be repaired to the extent required by the appropriate section of the RRS. For example, exterior wall framing exposed by removing a dilapidated shed **shall** be covered with siding compatible with the surrounding siding material.

Commentary: OHCP expects attached structures such as; porches, balconies, utility rooms, garages, etc. to be safe and reasonably sound. For example, existing electrical service to such areas must meet the requirements of the RRS and the structural components of the addition must be free of obvious hazards and deteriorating conditions.

However, as noted in Exception #1, OHCP recognizes that uninhabitable areas do not need to be rehabilitated to the same degree as habitable areas. OHCP also recognizes in Exception #2, that, in some cases, it can be more cost-effective to remove an unused severely deteriorated addition than to rehabilitate it.

2.8 INTERIOR AND EXTERIOR STAIRS

2.8.1 STAIRS

Standard: All stairs **shall** be safe and structurally sound. All treads and risers **should** be of the same size, in order to prevent tripping. All stairways **shall** have illumination in accordance with the *RCO 311.6.7*. New stairs and ramps **shall** conform to the requirements of *the RCO Sections 311 and 312*, and to the extent possible, meet *the RCO* requirements for headroom, slope, width, maximum riser height, minimum tread width, landings, etc.

2.8.2 HANDRAILS

Standard: All existing stairs with four or more risers **shall** have a handrail on at least one side, and all handrails **shall** be safe and securely and firmly fastened in place. All handrails **shall** be easily graspable by the occupants. All handrails **shall** return to the wall, floor, or post so that they do not constitute a hazard to pedestrians. Treated 2”x 4”s **shall not** be installed for the purpose of a handrail, but proper handrails **shall** be required. All new handrails **shall** meet the height, continuity, and grip size requirements of RCO 311.5.6.

2.8.3 GUARDRAILS

Standard: All stairs with open landings, balconies, or porches more than 30 inches above the grade below **shall** have guardrails. All guardrails **shall** be safe and securely and firmly fastened in place. All new guardrails **shall** meet the requirements of RCO 312.

Commentary: Stairs that are poorly constructed or in poor condition present tripping and falling hazards to all who use them. It is important for the treads, risers, handrails and guardrails to be sound and firmly secured and for the stairs themselves to be sound and firmly secured to the structure.

2.9 NEW CONSTRUCTION

Standard: New room additions or new dwellings constructed on the site **shall** conform to local code requirements, and to all specifically applicable codes within the *RRS.* New room additions and new dwellings constructed on the site shall also conform to the requirements of all applicable chapters and sections of the most recent State of Ohio adopted versions of the following codes:

- *Residential Code of Ohio*
- *Ohio Plumbing Code*
- *Ohio Mechanical Code*
- *National Electric Code (NFPA 70)*
- *International Energy Conservation Code*
- *International Fuel Gas Code*

Commentary: Occasionally the need arises to construct a new room addition to relieve overcrowding or to provide a necessary facility such as an indoor bathroom or furnace utility room, etc. Also, it may be appropriate to construct an entirely new dwelling on the site to replace one that cannot be rehabilitated. Because such structures are entirely new without the limitation caused by working within an existing structure, OHCP requires that they will be planned and built to conform to *the RCO, the above listed codes, and all local code requirements*.
There are also standards covered within the RRS that are outside of the scope of the RCO and the other state adopted building codes. For example, Chapter 6 has standards relating to landscaping, fences, outbuildings, etc. These also apply to new construction projects.

2.10 MODULAR, MANUFACTURED, AND MOBILE HOMES

Standard: New modular dwellings, transported and installed on the site, **shall** meet the applicable requirements of *the listed codes IN RRS 2.9,* the same as for any stick built house. New manufactured units which bear a certification meeting *24 CFR Part 3280, the Manufactured Home Construction and Safety Standards as established by HUD*, **shall** be considered by OHCP to have met the requirements of the RRS, providing that their installation (including location, utility hook-ups, foundation, anchorage, etc.) **shall** meet the appropriate Chapters and Sections of *the RCO, the above listed codes, the manufacturer's instructions, and all applicable local code requirements*. All existing manufactured houses **shall** be installed on permanent foundations, and shall be subject to all of the *rehabilitation requirements of the RRS,* just like any other house. Mobile homes cannot be rehabilitated using the RRS. However, any repairs that are done to them using this document must meet the applicable *RRS requirements*, just like any other house.

2.11 GREEN BUILDING

Standard: All newly constructed dwellings **should** use green building (conservation minded) materials, methods, technology and design, where practical. All existing homes being rehabilitated **should** consider alternative approaches that use green building materials, methods, technology, and/or design when replacing systems or structural elements, where it is practical.

Commentary: Green building is the building of houses that are healthy for the occupants, and that help to protect the earth and to conserve the earth's resources. As environmental concerns continue to mount worldwide, integrating more sustainable practices and products into our projects becomes increasingly important. Buildings consume very large quantities of the earth's resources in their construction and daily operation. Following are five principles of sustainability that may be helpful to potentially integrate into your construction practices.

1. **Optimize use of the sun and wind:**

   a. Design and orient the house and/or windows to minimize summer afternoon solar heat gain and to optimize winter solar heat gain. Wide overhangs, special coatings on the windows, and consideration of house and window placement are all examples that can be incorporated into your projects.
   b. Situate the house to take into consideration the prevailing breezes and winds at various time of the year.
   c. Plant shade trees and shrubs around the house to provide shade in the summer. This also releases oxygen into the atmosphere and has other beneficial environmental impacts. Only limited landscaping can be done. See the RRS, Chapter 6 for more details.

2. **Improving indoor air quality:**

   Indoor pollutants range from toxins found in building materials, such as formaldehyde and lead to allergens such as mold, bacteria, dust mites, and fungus. These pollutants may cause health problems for the occupants. Here are some measures that can be taken to improve indoor air quality.

   a. Select materials that limit out-gassing of volatile organic compounds, have no toxic properties, and do not shed fiber or dust.
   b. Seal off the garage from the house, or take other steps to eliminate fumes from cars and lawn mowers, such as installing an exhaust fan in the garage.
   c. Choose ventilation systems that remove dirt, dust, moisture, humidity, and pollutants.
   d. Eliminate moisture sources that produce mold, mildew, and fungus.
   e. Install exhaust fans in the kitchen and bathrooms to remove gases like carbon monoxide and water vapor that can cause molds to grow.
   f. Use water-based paints, finishes, and sealants. Some milk-based paints are also available.
   g. Select solid woods for cabinetry, trim, and other solid surfaces, rather than pressed woods or composites that may contain formaldehyde or other toxic chemicals.

3. **Use the land responsibly:**

   a. Purchase lots located close to public transportation and community services.
   b. Cluster houses together on smaller lots to conserve open space.
   c. Limit the use of impervious surfaces to reduce storm water runoff and contamination of local water sources.

4. **Create high performance and moisture resistant houses:**

   a. Create a building envelope with more durable and energy efficient materials
   b. Seal cracks and gaps in the building envelope to reduce drafts, keep moisture out, and keep conditioned air in.
   c. Balance room temperatures to make occupants more comfortable at more moderate temperatures.
   d. Increase insulation to decrease energy usage and lower utility costs.
   e. Follow energy star guidelines in the construction or rehabilitation of a house and in the selection of appliances, lighting options, etc.

5. **Wisely use the earth's natural resources:**

The earth has a finite amount of natural resources, and it is our responsibility to make them last. It is also up to us to use these resources in a way that is not detrimental to the environment or our health. Selecting green materials typically involves an assessment of a product's environmental impact over its life cycle. This process tracks the raw materials used to make a product, its manufacturing process, its transportation, its performance when it is used, and its disposal, reuse, or recycling options. When choosing materials and products look for;

a. High levels of renewability, reusability, and durability.
b. Low levels of embodied energy (the energy required to extract, process, and transport materials).
c. Low levels of environmental impact, the negative effects on outdoor and indoor environments.
d. Repair leaky faucets and install low-flow showerheads and faucets.
e. Choose carpeting and other textiles made from natural fibers, such as cotton or wool, which are untreated and free of toxins such as pesticides or chemical cleaners.
f. Use flooring, cabinets and other hard surface component products made from rapidly renewable or sustainable resources, such as agricultural waste composite board, bamboo or cork.
g. Reuse materials such as brick, stone, glass, tile, wood or metal.
h. Replace old appliances that are not energy efficient.
i. Buy locally produced products and materials whenever possible to reduce additional energy use and pollution associated with transportation.
j. Eliminate waste by choosing products that are biodegradable or recyclable.
k. Find uses for construction waste, such as shredding wood scraps for mulch.
l. Use certified wood harvested from sustainable managed forests.

CHAPTER THREE

HEATING, VENTILATION, AND AIR CONDITIONING SYSTEMS

GENERAL REQUIREMENTS

The HVAC system of the house, in conjunction with the other house systems, is responsible for providing a comfortable living environment for the occupants. To be effective, the HVAC system must accomplish the following:

- Provide a steady source of pure conditioned air, which is at a temperature that is comfortable to the occupants in every part of every habitable room of the house.
- Protect the other components of the house, such as water pipes, from freezing.
- Control ventilation quantities and indoor air quality for each habitable room of the house.
- Require a type and quantity of fuel that is affordable and available to the occupants.
- Be free of any contaminants that will negatively affect indoor air quality.

The HVAC system is not capable of accomplishing these tasks on its own, but must work with the other components of the house, as a system, to effectively accomplish these tasks. For example, a heating system cannot provide a steady source of warm air to a room that does not have walls, or that has walls incapable of containing the warm air. Therefore, the house must be viewed as a system, with the various components working together to effectively meet the needs of the occupants.

3.1 SOURCE OF HEAT

Standard: Each house **shall** have a safe heating source, capable of bringing and holding each habitable room at a temperature of 70 degrees, 95% of the time.

Commentary: The term habitable room, as it is used here, means rooms in which the occupants of the house routinely eat, sleep, and/or live.

3.2 CHIMNEYS AND FIREPLACES (SOLID FUELS)

3.2.1 SAFE SOLID FUEL CHIMNEYS

Standard: All active solid fuel-burning (i.e. wood or coal burning) equipment **shall** be connected to a safe chimney. Masonry and factory-built chimneys connected to active fireplaces or fireplace stoves **shall** be structurally sound and form an unobstructed and continuous flue to safely conduct flame, heat, combustion gases and smoke to the outside. Chimney flues venting solid fuel burning equipment **shall** be designated for solid fuels only. Factory-built chimneys **shall** conform to the conditions of their listing and the manufacturer's installation instructions.

Active masonry or factory-built chimneys **shall** be inspected for flue blockages, excessive creosote build-up, inappropriate or unsafe materials, loose, missing or cracked sections, improper flue linings and improper installation and listing. Problems noted as a result of the inspection **shall** be corrected, or, if it is not serving as the primary heating source, taken permanently out of operation. Repairs and replacements **should** conform to the *RCO, Chapter 10, and the manufacturer's installation instructions*.

3.2.2 FIREPLACE AND SOLID FUEL APPLIANCE SAFETY

Standard: Active masonry and factory-built fireplaces and fireplace stoves **shall** be structurally sound, capable of safely combusting the appropriate fuel and properly connected to a safe chimney. Factory-built fireplaces and fireplace stoves **shall** conform to the conditions of their listing and the manufacturer's installation instructions. They **shall** be inspected for missing, broken, or loose fire brick, broken or severely rusted metal structural elements or dampers, unsafe operation including excessive back drafting, an inadequate source of combustion air, inadequate clearance to combustible materials, and inadequate protection from sparks and logs falling out of the firebox. Problems noted as a result of the inspection **shall** be corrected. Repairs and replacements **should** conform to the *RCO, Chapter 10, and the manufacturer's installation instructions*.

3.2.3 REPLACEMENT OF SOLID FUEL APPLIANCES

Standard: Active solid fuel-burning fireplaces and fireplace stoves that cannot be made safe or that cannot be connected to a safe chimney **shall** be replaced if the stove is the primary heat source, and the chimney vent connection **shall** be replaced with a proper chimney. These replacements **shall** conform to the *RCO, Chapter 10, and the manufacturer's installation instructions*. Alternatively, if no other primary heat source is present, an alternative heating system and fuel source **shall** be installed. However, before fuel sources are changed, the lifestyle and affordability of the household **shall** be considered.

Commentary: The safe operation of an active (i.e. used by the occupant) solid fuel fireplace and chimney is an important health and safety concern. Therefore, a careful inspection of the solid fuel burning equipment and the chimney to which it is connected is needed to determine if repair or replacement is necessary.

3.3 CHIMNEYS AND VENTS (NATURAL GAS, PROPANE, OIL)

3.3.1 GAS AND OIL BURNING APPLIANCE CHIMNEY OR VENT GENERAL REQUIREMENTS

Standard: All gas or oil burning heating equipment **shall** be connected to a safe chimney or vent. Masonry chimneys, factory-built chimneys and all vent system components, including; draft hoods, vent dampers, draft regulators, vent connectors and vents **shall** be structurally sound and properly connected to form an unobstructed continuous flue to safely conduct combustion gases and heat to the outside.

3.3.2 GAS-FIRED APPLIANCE VENTING REQUIREMENTS

Standard: All gas appliances and equipment **shall** be connected to a chimney that conforms to the requirements of the *RCO, Chapters 18 & 24, and the equipment manufacturer's instructions*. The chimney **shall** be thoroughly inspected for proper size, clearance, types of materials, slope and other requirements pertaining to a safe installation, based upon the requirements of the *RCO, Chapters 18 and 24,and the equipment manufacturer's instructions*. All problems noted **shall** be corrected, or, alternatively, if it is not the primary heating source, the equipment **shall** be taken permanently out of operation.

3.3.3 OIL-FIRED APPLIANCE VENTING AND CHIMNEY REQUIREMENTS

Standard: All oil burning appliances **shall** be connected to a chimney that conforms to the requirements of the *RCO, Chapter 18, and the equipment manufacturer's instructions*. The chimney **shall** be thoroughly inspected for proper size, clearance, types of materials, proper operation of any draft damper, slope and other requirements pertaining to a safe installation, based upon the requirements of the *RCO, Chapter 18, and the equipment manufacturer's instructions*. All problems noted **shall** be corrected, or, alternatively, if it is not the primary heating source, the equipment **shall** be taken permanently out of operation.

3.3.4 CONVERTING A SOLID FUEL CHIMNEY TO FOSSIL FUELS

Standard: When converting a chimney that has been used for venting solid fuels to serve as the venting for equipment burning fossil fuels, an approved chimney lining system designed for the type of fuel to be used shall be specified for installation, and a thorough cleaning of the chimney shall be performed before installing a new liner, removing all creosote from inside the existing chimney to prevent pitting and deterioration of the liner to be installed.

Commentary: OHCP requires that chimneys, vents, vent connectors, mechanical and automatic vent dampering devices be inspected for missing, cracked, constricted, or disconnected or loose components, and to also ensure proper installation, and to determine if repairs are needed.

Masonry and factory built chimneys must conform to the condition of their listing and design, be properly installed, properly sized, and draft properly for the number of heating appliances connected to them, per the manufacturer's instructions.

3.4 HEATING EQUIPMENT (ALL FUELS)

3.4.1 COMBUSTION SAFETY

Standard: Fuel-burning equipment **shall** combust fuel safely and operate as close to the designed Annual Fuel Utilization Efficiency (AFUE) as possible. Flue gases (oxygen and carbon monoxide), stack temperature and smoke **shall** be within acceptable limits.

A pre and post rehab draft test and Co test **shall** be performed on all combustion appliances, including gas cooking stoves. For specific testing requirements, see *RRS 3.5*.

Exception: Testing of emergency heating sources that will not be used on a regular basis is not required.

Commentary: This is to clarify what we mean by pre-and post-rehab. With the exception above, all equipment will need to be tested as outlined in *RRS 3.5.* Existing units that are clearly going to be replaced (*see RRS 3.4.5*) will not need to be tested. The new equipment that is replacing it will need to be tested following its installation. All existing combustion appliances that may be kept in place will need to be tested, and brought to acceptable standards. If they can not be brought to acceptable standards, then they will need to be replaced with new equipment which will also need to be tested.

3.4.2 PROPER TYPE OF FUEL

Standard: The equipment **shall** be designed and listed for the type of fuel utilized, or to which it is connected.

3.4.3 PROPER LOCATION

Standard: The equipment **shall** be designed and listed for the location in which it is installed. See the *RCO, Section G2406 and the manufacturer's installation instructions*. All equipment installed in garages **shall** comply with the *RCO, Section M1307.3 and M1307.3.1*.

When equipment is found to be located in inaccessible locations such as attics and crawlspaces, the equipment **should**, if possible, be relocated to allow better accessibility to the equipment.

3.4.4 ACCESSIBILITY AND CLEARANCES

Standard: The equipment **shall** be accessible for inspection, service, repair and replacement without removal of permanent construction, and it also **shall** be properly clear from combustible materials. Clearances **shall** conform to the *RCO, Section M1306, Section G2409.4, and the manufacturer's installation instructions, as applicable*.

3.4.5 WHEN TO REPLACE HEATING EQUIPMENT

Standard: Replacing existing heating equipment that is unsafe, inefficient or likely to fail in the near future is a frequent occurrence in rehabilitation. The reason for replacement **shall** be documented, and heating equipment **shall** be replaced when any of the following conditions are present:

a. The equipment is unsafe and not easily repairable. For example, the heat exchanger is cracked and no longer under warranty, or the problems are too numerous to justify the repair expense.

b. The equipment is located in an area inappropriate to its listing and cannot be moved to an appropriate area due to its design.

c. The equipment combusts fuel very inefficiently and due to design, cannot be retrofitted such as replacing an old fuel oil burner with a more modern flame retention burner. For example, OHCP recommends replacing gas-fired heating equipment that has a verified Steady-State Efficiency (SSE) of 60% or less.

d. The primary heating equipment is an unvented fuel-burning space heater. Replacement space heaters shall be vented.

e. The primary heating equipment is an unsafe, electrical baseboard heater.

Aside from the reasons listed above, heating equipment **should not** be replaced.

3.4.6 SIZING REPLACEMENT EQUIPMENT

Standard: Replacement heating and cooling equipment **shall** be properly sized in accordance with the *ACCA's Manual J* or other recognized methodology. Data for heat load/loss calculations **shall** be based on post-rehabilitation conditions.

The replacement heating equipment **shall** be a proper fit in size to any other existing portions of the system, i.e. fuel lines carrying the appropriate quantity, type, and pressure of fuel, distribution and return systems carrying the appropriate cfm's to each location, air conditioning equipment rated to match the furnace, properly sized electrical circuits and equipment, etc. Where the other equipment is improperly sized to fit the new equipment, it **shall** also be replaced or modified so that there is a proper fit.

3.4.7 INSTALLATION OF REPLACEMENT HEATING EQUIPMENT

Standard: Replacement heating equipment **shall** be installed to conform to the *RCO Chapters 12, 13, 14, 16, 17, 18, 20, 21, 22, 23, and 24 and the NEC (NFPA 70A) Articles 422 and 424*, as appropriate to the fuel source, and the manufacturer's installation instructions.

Commentary: The safe and efficient operation of heating and cooking equipment is not only an important health and safety concern but it is also an important factor bearing on affordability, because fuel consumption can significantly contribute to the operating costs of the home.
The basic information and formulas used to determine heat load and equipment output is outlined in Manual J, Residential Load Calculation. The equipment should not only be sized properly to meet the heating or cooling load requirements of the home but it should also be an energy efficient model and fit well with considerations to the client's lifestyle. OHCP recommends a cost-benefit approach to selecting replacement heating and cooling equipment. In other words, the "cost" of the equipment should consider not only its installation cost but also its long-term operating cost. Methodology for comparing the cost of various equipment models is outlined in *the GAMA Consumer's Directory of Certified Efficiency Ratings*.

3.4.8 USE OF 90+% EFFICIENCY FURNACES

Standard: When a new gas-fired, forced air furnace is to be installed, the furnace **shall** have a minimum efficiency rating of 90%. The new furnace **shall** be of a two-pipe design, drawing all air for combustion from outside.

3.4.9 ELECTRICAL RECEPTACLE AND LIGHTING

Standard: Equipment **should** have a permanent electrical receptacle, and indoor equipment **should** have a lighting fixture provided near the equipment, which **should** be controlled by a switch. All replacement equipment **shall** have the above items near the equipment.

3.4.10 UNVENTED EQUIPMENT

Standard: Unvented fuel-burning primary heating equipment (e.g. unvented gas or oil space heater) **shall not** be permitted as a primary heat source. Unvented heaters other than those that are the primary heat source **shall** be made to comply with the *RCO, Section G2445* or be removed.

3.4.11 COMBUSTION AIR

Standard: Fuel-burning equipment **shall** be provided with sufficient combustion air drawn from proper locations in conformance to the *RCO, Chapter 24, and the manufacturer's installation instructions*.

Commentary: A sufficient supply of combustion and draft dilution air is critical to the efficient operation of non-direct vent fuel-burning heating equipment and to the health and safety of the occupants. If the building is tightly constructed or if the heating equipment is located in a confined room or space, additional combustion air and draft dilution air must be provided. A confined room or space is defined as having less than 50 cubic feet of space per 1,000 BTU/hr input for each fuel-burning furnace and water heater in the space. Additional air may be provided from inside the building, outside the building or in combination, as described in *CABO Sections 2002, 2003 and 2004*.

3.5 EQUIPMENT INSPECTIONS

Existing heating equipment which is not to be replaced **shall** be carefully inspected to determine operating safety and efficiency. Problems noted as a result of the inspection must be corrected by repairing, cleaning and tuning, or replacement of the equipment. OHCP expects that gas fuel-burning heating equipment **shall** be inspected according to the recommended procedures contained in the *International Fuel Gas Code, Appendix D, or NFPA 54, Appendix H*. OHCP also expects that, regardless of fuel type, the heating equipment inspection **shall** be in compliance with the requirements of *RRS Appendix 3-B*, and **shall** meet the specific requirements for each fuel type as outlined in Appendix 3-B-1 for electric heating equipment, Appendix 3-B-2 for Fuel Oil heating equipment, and Appendix 3-B-3 for solid fuel burning equipment.

Commentary: In addition to "tuning-up" the equipment, installing devices to improve operational efficiency; such as flame retention burners (oil) may be cost-effective improvements to replacing an otherwise safe heating appliance.

3.6 COOLING EQUIPMENT (AIR CONDITIONING)

3.6.1 INSTALLATION REQUIREMENTS FOR NEW EQUIPMENT AND SYSTEMS

Standard: Cooling equipment newly installed by the rehabilitation program **shall** operate safely and efficiently, and **shall** be properly installed according to the *RCO, Chapter 14 and 16, the NEC (NFPA 70A), Article 440,* and sized to fit the furnace, which **shall** be sized according to *the ACCA's Manual J or other recognized methodology*.

If cooling equipment exists and a new furnace is to be installed, a new coil **should** be installed, which matches the unit to be installed. If the existing coil is in good condition, is compatible and properly sized to the new unit, it can be left in service. If the budget does not allow for the installation of a new unit, then the existing cooling system may be entirely removed.

3.6.2 WHEN TO REPLACE OR INSTALL COOLING EQUIPMENT

Standard: Cooling systems are not required to be installed by the RRS, but new systems could be installed if funds allow, and **should** be installed where excess heat may be an undue stressor on the occupants or contribute to health issues. A central cooling system could also increase affordability if several inefficient window air conditioners are currently in use. Existing cooling systems **shall** either be disabled, or inspected and repaired according to the guidelines in *RRS 3.6.3*.

3.6.3 REQUIRED INSPECTIONS AND REPAIRS TO COOLING SYSTEMS

Standard: For existing cooling equipment that is to be kept in service, a thorough inspection **shall** be required, which shall comply with the requirements of *RRS Appendix 3-C*. New cooling equipment **shall** also comply with the requirements of *RRS Appendix 3-C*.

Commentary: The installation of new cooling equipment is not required, but must be considered as an option to address the health, safety, and affordability of the occupants, or as a means to reduce energy consumption. Existing cooling equipment could be repaired or disabled at the grantee's option. Special consideration needs to be given to properly size the return system, and increasing the amount of return air may be required.

3.7 HEATING AND COOLING DISTRIBUTION SYSTEM

3.7.1 GENERAL REQUIREMENTS

Standard: The distribution system **shall** be appropriate for the type of heating equipment to which it is connected, **should** provide an adequate supply of conditioned air to each habitable room and **shall** provide an adequate amount of air returning to the heating equipment. Ducted (gravity or forced air) and piped (hydronic) distribution systems **shall** be adequately sized, located, sealed, secured, protected, balanced, and insulated to provide for the efficient unobstructed flow of supply and return air.

3.7.2 NEW DISTRIBUTION SYSTEM REQUIREMENTS

Standard: Newly installed heating and/or cooling distribution systems **shall** comply with the requirements of the *RCO, Chapter 16 and 21*, and new duct systems **shall** comply with *ACCA Manual D*.

3.7.3 INSPECTION AND REPAIR/REPLACEMENT REQUIREMENTS

Standard: Safe and efficient heating/cooling equipment which is connected to a defective distribution system cannot create an environment that is both comfortable and affordable to the occupant. Therefore, the distribution system **shall** be inspected to determine if it is operating effectively. The inspection **shall** ensure that the distribution system complies with the requirements of ACCA, Manual D, or other recognized methodology.

Commentary: To help determine if a forced-air system supply air and return air is adequately balanced, OHCP recommends measuring the temperature rise, for heating applications, by inserting a thermometer in the supply and return ducts within 12 inches of the plenums while the furnace is operating. If the temperature difference between the supply air and the return air is between 40F and 70F (PMI), the system is likely adequately balanced. In addition, the unobstructed area of the return air and the supply air ducts must meet the size requirements of ACCA Manual D.

In general, there must not be less than 2 square inches of return and supply for each 1,000 BTU/hr input rating of the furnace or, if air conditioning is present, no less than 6 square inches of return and supply for each 1,000 BTU/hr input rating of the furnace. However, the location of the supply and return ducts is also an important consideration. For example, rooms with tight fitting closed doors and no return register may cause forced-air systems to be unbalanced.

To restore balance (and reduce room over-pressurization) doors may need to be under-cut or grilles which connect the room with the rest of the house may need to be installed. If there is a need for grilles to be installed, OHCP suggest grilles be installed on common interior walls. Precaution should be taken to seal any wall cavity at the top and bottom when considering this type of application.

If replacing the heating and/or cooling equipment involves changing the heating and/or cooling distribution system (e.g. replacing space heaters with a ducted forced air system), or changing fuel sources (e.g. switching from fuel oil to electricity), OHCP recommends taking a cost benefit approach, as well as considering the clients lifestyle.

3.8 WATER HEATING EQUIPMENT (ALL FUELS)

3.8.1 NEW INSTALLATIONS

Standard: The new installation of water heaters shall conform to the OPC, Chapter 5.

3.8.2 GENERAL REQUIREMENTS

Standard: Water heating and storage equipment **shall** meet the following conditions:

a. All houses rehabilitated shall have domestic water heating equipment, and this equipment **shall** be capable of meeting the requirements of the *IPMC Section 505.4 and the RCO, Section M2004*. All water heating and storage equipment, which is not an obvious candidate for replacement, **shall** be inspected to ensure safe and efficient operation, and cleaned and tuned, if necessary.

b. The equipment **shall** be designed and listed for the location in which it is installed, see the *RCO M2005*. All equipment installed in garages **shall** comply with the *RCO, Section M1307.3 and M1307.3.1*. All fuel-fired water heating equipment located in garages **shall** be placed a minimum of 18 inches above the floor and be protected from damage by vehicles. If the fuel-fired water heating equipment is located in proximity to the storage of flammable liquids or materials, it **shall** be placed a minimum of 18 inches above the floor. Fuel-burning water heaters **shall not** be located in storage closets, bedrooms, bathrooms or other occupied rooms usually kept closed, unless in a sealed enclosure which provides adequate combustion air and prevents combustion air from being taken from the living space, or the equipment is a direct-vent model.

c. The equipment **shall** be accessible for inspection, service, repair and replacement without removal of permanent construction.

d. The equipment **shall** be properly connected to the hot and cold water supply lines, including a shut-off valve on the cold water supply as required in the *OPC 503.1*. As required in the *OPC, Section 605.23*, a dielectric union or non-conductive connector **shall** be used when dissimilar metals are joined.

   Where required to prevent undue pressure from expansion where a pressure reducing valve or a backflow prevention device is installed in the system, an expansion tank **shall** be installed in accordance with *OPC 607.3.1 and 2*.

e. The equipment **shall** have an approved (rated & stamped) pressure and temperature relief valve as required in the *OPC, Section 504*. The relief valve setting **shall** not exceed the tank's rated working pressure. The equipment **shall** be equipped with a safety discharge pipe of 3/4 inch rigid pressure and temperature approved pipe which terminates with an air gap and comes to within 6 inches of the floor, or empties into a plumbing fixture, floor drain or some other approved point of discharge as required in the *OPC, Section 504.6.1*. CPVC **shall not** be used for this application.

f. Replacement water heaters **shall** be properly sized to the needs of the household. Sizing calculations **shall**, at a minimum, conform to the water heater sizing calculation outlined in *the GAMA Consumers Directory of Certified Efficiency Ratings (GAMAnet.org)*.

g. Fuel-burning equipment **shall** be properly clear from combustible materials. Clearances **shall** conform to the *RCO, Sections M1306.1 and G2409.4, and the manufacturer's installation instructions*.

h. Fuel-burning equipment **shall** be safely connected to an approved venting device directly to outside air. Vents **shall** be free of obstructions, cracks and holes, and provide sufficient draft to safely exhaust heat and combustion gases to the outside. Vents and chimneys **shall** be properly sized to the number and type of heating appliances. Repairs or replacements to venting system components **shall** conform to the *RCO, Chapter 24, and the manufacturer's installation instructions. Also see the requirements for vents and chimneys at RRS 3.3*.

i. Fuel-burning equipment **shall** be provided with an adequate supply of combustion air in accordance with *the RRS 3.4.11*.

j. Fuel-burning equipment **shall** combust fuel safely and efficiently. Flue gases (oxygen and carbon monoxide), stack temperatures and smoke **shall** be within acceptable limits.

A pre and post rehab draft test and Co test **shall** be performed on all combustion appliances. For specific testing requirements, see *RRS 3.5*.

Commentary: Safe and properly installed water heating equipment and an adequate supply of hot water are critical to a healthy habitable environment. To provide an adequate supply of hot water, the water heating equipment must be capable of heating water to such a temperature as to permit an adequate amount of water to be drawn at every required sink, lavatory basin, bathtub, shower, and laundry facility or other similar unit, at a temperature of not less than 120 degrees Fahrenheit at any time needed under normal usage.

3.8.3 WATER HEATER INSPECTION/REPLACEMENT

Standard: To ensure that the existing water heating equipment which is not to be replaced is installed properly and operating safely, the equipment **shall** be thoroughly inspected. The water heating equipment inspection **shall** follow the inspection checklists in *Appendix 3 - D*, and the water heater **shall** be in compliance with the requirements of this Appendix.

Commentary: OHCP requires the replacement of water heating equipment that has a leaking or severely corroded tank, that is not repairable at a reasonable cost, or that is located in a prohibited area and cannot be made to conform. Installing the right size and model water heater is important for ensuring that the occupants receive an adequate supply of hot water at a reasonable operating cost.

OHCP recommends a cost-benefit approach and thought given to energy efficiency and affordability in selecting replacement water heaters. The "cost" of the equipment should consider not only its installation cost but also its long-term operating cost. Often the incremental increase in the cost of high Energy Factor (EF) rated equipment is off-set within a few years by the fuel savings achieved over low EF rated equipment. Methodology for selecting properly sized water heaters and for comparing the cost-effectiveness of various equipment models is outlined in the GAMA Consumer's Directory of Certified Energy Ratings. Installation costs and particular venting difficulties must also be considered.

3.9 FUEL-GAS PIPING

Standard: The fuel-gas piping system **shall** be free of leaks, with each section properly sized for all of the appliances connected to it in accordance with the *ORC, Section G2413*, and properly installed using approved materials and methods for the type of fuel carried in accordance with the *ORC, Sections G2414 through G2424*. All existing fuel-gas piping **shall** be inspected visually for defects in materials and installation and tested for leaks by means of a pressure test in accordance with the *ORC Section G2417*, or with a combustible gas leak detector. All leaks found as a result of the inspection **shall** be repaired and a second test **shall** be done to assure that no other leaks exist.

All other defects in materials, sizing and installation **shall** be corrected to ensure the following conditions:

a. Each fuel-gas operated appliance **shall** have a proper shut-off valve within six feet of the appliance (which must be in the same room as the appliance), as required in the *ORC, Section G2420.5*.

b. All fuel gas piping **shall** be properly supported, as required in the *ORC, Sections G2418 and 2424*.

c. The fuel-gas piping **shall** be properly sized for all of the appliances connected to it, as required in the *ORC, Section G2413*.

d. Sloping of pipes, drips, and sediment traps **shall** be installed in accordance with the *ORC, Section G2419.*

e. Appliances **shall** be connected to the fuel gas piping in accordance with the *ORC, Section 2422*.

f. All gas piping and fittings used in any new installations or repairs **shall** be of an approved type, in accordance with the *ORC, Section G2414.*

g. All work **shall** conform to the *ORC Sections G2415 through G2424*.

h. Old unused and disconnected fuel-gas piping located in accessible areas (e.g. basements) **should** be removed.

i. All new piping installations **shall** be tested, inspected, and purged in conformance with the *ORC Section G2417*.

Commentary: For the purposes of the RRS, the fuel-gas system includes all fittings and valves between the riser of the gas meter (or in the case of LPG systems, from the outlet of the first stage pressure regulator) and the equipment that they operate. A properly installed fuel-gas piping system is essential for ensuring the safety of the occupants and the proper operation of the fuel-gas burning equipment.

CHAPTER FOUR

ELECTRICAL SYSTEM

GENERAL REQUIREMENTS

The electrical system must provide for a safe adequate supply of electrical current to meet the needs of the occupants. To be safe and effective, the following must be true of the electrical system:

- The electrical system is properly grounded, free of hazards, and all components carrying current are properly secured in a manner that prevents contact by the occupants or the potential for electrical shock.
- The condition of all wiring, outlets, fixtures, and equipment is good, without deterioration or outdated components, free of electrical shorts or other fire hazards, and is safe, secure, and well maintained.
- The electrical current and voltage is adequate, consistent, and appropriate at each outlet, fixture, and piece of equipment for its intended use.
- All electrical conductors, fixtures, boxes, and equipment are properly sized and rated for their expected use and load.
- The system is designed to be adequate for the current use, as well as the expected future use, and takes into consideration the lifestyle of the occupants.
- Lighting and receptacle outlet needs are properly addressed, and the type of wire, receptacles, and fixtures are appropriate for the location.

Electricity is a potent force which can result in fire, shock, property damage, serious personal injury and even death. Therefore, the safety, capacity, and convenience of the wiring system are primary concerns. The electrical system is also vital to the proper operation of many of the other systems in a house. For example, the furnace, sump pump, and septic system aerator will not work properly, and can be damaged by an unsafe, improper, or inadequate supply of electricity.

4.1 WORK EXECUTION STANDARDS

4.1.1 QUALIFIED PERSONNEL

Standard: All persons involved in conducting inspections related to electrical work and in completing electrical work **shall** be qualified, and in compliance with *RRS 1.8.1*.

Commentary: Inspection of the existing electrical system to clearly evaluate the safety of the exterior wiring, service entrance cable, meter base, system grounding, the service equipment/distribution panel, premises wiring, fixtures, receptacles, switches, and equipment grounding must be conducted by qualified personnel, who understand the principles of electricity, are experienced in working on and inspecting residential electrical systems, who are familiar with the National Electrical Code, and who understand the hazards associated with electricity.

They must also be capable of evaluating the safety of the service; grounding protection; condition of existing wiring, fixtures, and equipment; determining potential electrical hazards; and the capacity of the service to meet the anticipated usage demand and convenience needs of the occupants.

OHCP requires that installations to the electrical system including rewiring, repairing and updating of the existing electrical system be performed by a qualified person or persons, who understand the principles of electricity, are experienced in working on residential electrical systems, are familiar with the National Electrical Code and who understand the hazards associated with electricity.

Qualified personnel will generally be an electrical inspector, a licensed electrical contractor or electrician, whose primary occupation is residential electrical wiring; particularly if the installation is extensive. However, at a minimum, it must be a contractor or rehabilitation specialist who is familiar with proper residential wiring techniques, who understands the operation of the equipment, the hazards involved, all applicable codes and who will conduct work which results in an installation that meets the RRS and the requirements related to the proper mechanical execution of work. These standards apply to the inspections and to the rehabilitation work performed on the electrical system.

4.1.2 DETERMINING THE SCOPE OF WORK

Standard: Each of the standards contained in this chapter **shall** be used in determining the scope of work to be done. In addition, the requirements of the ***National Electrical Code*** related to each standard **shall** be applied, along with the principles of safety, capacity, and convenience.

Commentary: In particular, health, safety and lifestyle issues must be addressed. There are three primary considerations during the evaluation and alteration of any electrical system.

Safety: The *NEC* contains provisions considered necessary for safe operation and installation; however, as with most codes, it states minimum requirements. Providing a safe electrical installation and minimizing hazards can be done by following the manufacturer's instructions, fully complying with any limitations placed on the use of equipment and permitting only qualified persons to perform electrical installations to ensure proper mechanical execution of the work.

Capacity: Unsafe conditions often occur because the initial wiring system was not properly planned and outlets added later overload the existing circuits. Adequate capacity reduces hazards such as overloaded circuits, conserves energy and contributes to a safer electrical system.

Convenience: There should be enough switches, fixtures and receptacles and they should be located so that the occupants will not have to walk in the dark or use extension cords.

The *NEC* is a minimum code and can be exceeded, particularly to address health, safety and lifestyle issues. For example, electrical system design needs to consider the placement of switches for disabled occupants, the relocation of service equipment for ready access by the elderly/disabled and the number of bathroom receptacles needed by a family. Do not skimp on the number of branch circuits or number of receptacles. Remember most updating could have been avoided by more liberal planning when the system was originally designed and installed.

4.1.3 EXECUTION OF NEW WORK

Standard: All new electrical work **shall** meet all of the applicable requirements of the *NEC*, and **shall** be adequate to meet the needs and safety of the occupants. Installation of all new electrical wiring, fixtures and equipment **shall** be done in a neat and workmanlike manner.

4.1.4 REPLACEMENT, ALTERATION OR REPAIR TO ELECTRICAL SYSTEM

Standard: The standards and installation methods of the *NEC, Article 110-12*, which covers the "mechanical execution of work" **shall** be followed for all re-wiring, repairing and system upgrading, and work **shall** be completed only by qualified persons using accepted engineering practice and principles of good workmanship. All portions of the electrical system, including equipment, wiring, boxes and fixtures **shall** be attached in a secure and tidy manner for both safety and aesthetic reasons. Installations **shall** be neat and closely adhere to those methods detailed in the *NEC*.

Commentary: If the existing electrical service and fixtures are in good, safe, and adequate condition, and meet the general system requirements, they possibly will not need to be replaced. Existing portions of the electrical system which are safe, adequate and functional and consequently are not being re-wired, repaired or upgraded do not have to comply with the current *NEC codes*.

4.1.5 SYSTEM DESIGN

Standard: The system **shall** be designed so that none of the circuits are overloaded and so that post-rehabilitation needs are met, and **should** allow for future expansion. Electrical load calculations **should** be done on each circuit, and a list of everything on each circuit, along with the calculated loads and circuit capacity **should** be placed in the project (client) file. All overloaded circuits **shall** be addressed by separating of the load, and the provision of additional circuits to carry the load.

4.1.6 EXISTING WIRING AND FIXTURES

4.1.6.1

Standard: **Condition of existing wiring and equipment:** Existing wiring and equipment **shall** be in proper operating condition; free of taped splices, loose connections, missing insulation, short circuits or unapproved grounds. Service conductors **shall** not be frayed, worn or bare. The service conductors, including the service drop, service lateral and service entrance **shall** be out of reach or properly buried; and properly connected and anchored to the home, and **should** be run in a neat manner. All existing wiring and equipment that is not made safe, as described above, **shall** be removed. All wiring terminations and connections **shall** be made in listed, approved, and covered junction boxes.

4.1.6.2

Standard: **Secure fastening of fixtures and equipment:** Fixtures, boxes, and other equipment **shall** be securely fastened to the framing members by mechanical means, such as bolts, screws, rivets or approved clips. No fixture or socket **shall** hang from a base by unsupported wiring. All existing receptacle, switch, and junction boxes **shall** contain a proper cover plate.

4.1.6.3

Standard: **Specific location requirements:** All wiring, switches, receptacles, fixtures, boxes, conduit, fittings and other equipment located in damp or wet locations, that is exposed to direct sunlight, or that is buried **shall** be appropriately weatherproof, designed and listed for the location, and protected from physical damage as required by the *NEC (See articles 310, 312, and 314)*.

Commentary: Equipment includes materials, devices, fittings, fixtures, appliances, and apparatus that are used as part of, or in connection, with an electrical installation.

4.1.6.4

Standard: **Use of improper electrical conductors:** Circuit extensions made with flexible cord wiring (e.g. lamp cord/zip cord) or other inappropriate conductor in lieu of permanent wiring **shall** be eliminated and replaced with properly sized permanent electrical conductors appropriate for the intended circuit as defined by the *NEC*, *Article 310*.

4.1.7 STRUCTURAL INTEGRITY

Standard: In no case **shall** the structural integrity of the structural members be compromised (*See the RRS, 2.2.3 and 2.3.3*). New wiring **shall** be installed in a neat and workmanlike manner with all wiring run inside the walls, or if wall or ceiling cavities are not accessible, in properly sized and rated raceway or wire mold, secured along the sides or through joists with proper fasteners, flush to the surface, straight and securely attached in the wall or ceiling.

4.1.8 MATERIAL AND EQUIPMENT INSTALLATION

4.1.8.1

Standard: **Listing of material and equipment:** All material and equipment used in electrical installations **shall** be listed or labeled by a qualified electrical products testing laboratory such as “UL” or “CSA” as defined by NEC Article 90-7.

4.1.8.2

Standard: **Materials to be installed as intended:** Listed materials **shall** be installed per the intended use and location and per the manufacturer’s instructions as required by *NEC Article 110-3 (b)*. All terminations **shall** be made in accordance with the manufacturers’ instructions provided on the equipment.

4.2 GROUNDING AND SYSTEM PROTECTION

4.2.1 GENERAL SYSTEM AND GROUNDING REQUIREMENTS

Standard: All electrical systems **shall** consist of a single phase three wire grounded neutral service entrance and **shall** provide system grounding and equipment grounding protection.

4.2.2 GROUNDING OF THE SERVICE ENTRANCE

Standard: The service panel **shall** be connected to the grounding electrode system and to an 8' galvanized or copper clad steel ground rod. All electrical panels **shall** meet the bonding requirements of *NEC Article 250*.

4.2.3 GROUNDING OF METAL WATER PIPE

Standard: Where present, even if the plumbing system is not metal where it leaves the house, metal water pipes **shall** be bonded to the grounding electrode as a means of grounding the plumbing system to prevent the piping and/or fixtures from becoming energized and hazardous.

4.2.4 GROUNDING OF ALL EQUIPMENT AND WIRING

Standard: Ungrounded household equipment and wiring is a serious hazard to the occupants, therefore, all wiring and equipment **shall** conform to the grounding requirements of the NEC. All connections of electrical cables, raceways and equipment **shall** comply with rules pertaining to grounding continuity.

Commentary: Even though the neutral wire is grounded at the utility pole, OHCP requires the electric system to be grounded to an 8' galvanized or copper clad steel ground rod and a second grounding electrode as per *NEC Article 250*. For additional safety the service panel is to be bonded by a neutral metal strip and grounded by a bare copper wire connected to the grounding rod. The ground wires from the service entrance, branch circuits, and house ground are joined by this strip. The goal of system grounding is to tie all non-current carrying conductors together and place them at earth ground potential (0 volts) so that any stray current flows to the earth instead of through the wires and fixtures of the unit reducing electric shock and other hazards. This is done using the incoming neutral wire from the service and the neutral wire of the branch circuits.

This grounding method places the panel at ground potential of 0 volts so that it can never become a conductor if a hot wire touches it. This is especially important because all equipment grounding wires from every receptacle and every appliance, as well as the neutral wires, connect to the panel.

Equipment grounding includes grounding other metallic objects, such as piping systems or appliances that may become energized. The non-current carrying metal parts of electrical equipment and raceways that are metal (but are not designed to carry a current) such as metal boxes, washing machine frames and other appliances often become hazardous due to bad connections and can cause serious shock when touched. The three-pronged plug or cheater plugs will not always provide adequate equipment grounding. The *NEC* recognizes that pre-1978 grounding methods may be inadequate due to replacement of metal water pipes with plastic and that water pipe, in some cases, is no longer a reliable grounding electrode.

The NEC requires that the grounding be bonded together to form a “grounding electrode system”, therefore water piping that is not metal where it goes below ground must be supplemented by an additional electrode such as reinforcing rod, metal frame of the building, or a grounding ring. For additional guidance, see NEC Article 250-81.

4.3 SERVICE ENTRANCE AND EQUIPMENT – MAIN PANEL DISTRIBUTION CENTER

4.3.1 MINIMUM SERVICE SIZE AND LOAD CALCULATION

Standard: The minimum service entrance for a dwelling (usage or load) **shall** be 100 amperes with a three wire, 120/240 volt, single-phase service with a grounded neutral. The nominal size wire used with 100 amp service **shall** be No. 4 copper or No. 2 aluminum; for a 200 amp service 2/0 copper or 4/0 aluminum wire is the nominal size.

4.3.2 SIZING OF SERVICE ENTRANCE CABLE

Standard: The service entrance cable **shall** have the same rating (amperage) as the meter base and the service equipment. Larger cable has lower resistance and will result in energy efficiency and **should** be considered when designing the service. If the service entrance is to be replaced, a calculation of usage or load within the unit **shall** be completed to assist in determining the appropriate size.

Commentary: For cable size and allowable amperage requirements, see the *NEC ampacity Table 310.15(b)(6)* to determine the size of the service (which determines the entrance cable size) Sizing the service is based on the electrical needs within the home, the demand on the service, code requirements for individual circuits as well as liberal planning for future expansion. These needs are determined by calculating usage or load, based on factors such as square footage of the unit, determining the number of circuits needed based on appliances present and anticipated for future use. The utility will provide the correct meter base for the rating based on this calculation.

4.3.3 SIZING FOR AFTER-REHABILITATION CAPACITY & LOAD CALCULATION

Standard: The service entrance **shall** be properly sized for after-rehabilitation capacity. Room by room specifications noting electrical outlets/fixtures **shall** accompany the specifications or deficiency list prepared for each unit inspected. OHCP advises grantees to check the nameplate rating of all fastened-in-place small appliances such as; ranges, ovens, cooking units, clothes dryers and water heaters for actual VA rating. If the calculation falls at or near 100 amps, the service **should** be increased to the next common size available, such as 200 amps.

Commentary: The changes being made to the house during rehabilitation need to be considered when sizing the service entrance and the electrical system.

4.3.4 REQUIREMENTS FOR ALL-ELECTRIC HOMES

Standard: Homes equipped with all electric appliances such as: electric water heater, electric range, electric clothes dryer, central air conditioning, and electric heat **shall** be equipped with no less than a 200 amp service.

4.3.5 MAIN SERVICE PANEL/DISTRIBUTION CENTER

Standard: All service panels **shall** have a minimum rating of 100 amperes with circuit breaker type over-current protection. The panel **shall** be in proper working condition with no evidence of overheating, arcing, corrosion or failure. The panel **shall** bear the UL label and **shall** be marked as suitable for service equipment. Obsolete panels, such as Federal Pacific **shall** be replaced. Pushomatic panels **should** be replaced. Panels with evidence of malfunction or deterioration **shall** be replaced.

4.3.6 OVERCURRENT PROTECTION

Standard: The number of circuits installed **shall not** exceed the rating on the panel and the selection of a panel should permit room for future circuit expansion. Full size single pole or double pole breakers are recommended. Tandem breakers (half-size or mini-breakers) **shall** only be used in panels designed for such and installed per the NEC. The use of tandem breakers in order to exceed the 16 circuits permitted on a 100 amp panel **shall** not be permitted. All panel circuits **shall** be clearly, accurately, and permanently labeled with tags provided and all unused openings **shall** be properly plugged, capped or sealed with listed material. Panel board over-current devices **shall** be properly sized. All existing circuits **Should** be load tested for tripping. Service equipment containing fuse over-current protection devices **shall** be replaced with properly rated circuit breaker type over-current protection devices.

Commentary: Proper sizing of the circuit breaker is critical because the amperage rating of a circuit depends on the rating of the breaker protecting the wire, not the wire size in the circuit. If not properly rated the circuit may never trip even when wires overheat and many potential hazards may go undetected until too late.

4.3.7 SERVICE PANEL ATTACHMENT AND CONNECTIONS

Standard: All existing or new service panels **shall** be securely fastened to the dwelling. All panel boxes **shall** be enclosed in 16 gauge or code sheet steel cabinets with doors and catches. Conductors entering the service **shall** have proper connectors and **shall** be securely and neatly attached at terminals. The wires **shall** be properly connected to terminals with no obvious nicks in the insulation and **shall** be properly bonded. Service panels **shall** not be located in bathrooms or closets. Proper installation **shall** include following the manufacturers installation instructions or other instructions as required by NEC Article 110-3(b). The design and location of the service panel **should** be considered when replacement is necessary.

Commentary: A safe and secure service panel, with firmly secured conductors and labeled circuits is very important for the safety and convenience of the occupant. Locating the panel near the meter may eliminate the need for an additional disconnect as well as reduce the amount of service entrance cable needed. A good panel is designed with enough work space to connect wires to the hot buses and neutral/grounding buses without creating a bird's nest of wires.

4.3.8 SUB-PANELS (ADD-ONS)

Standard: Sub-panels, add-on boxes or disconnects to existing services for additional circuits, **shall** be allowed only if the existing service equipment is listed and designed for such extension and the installation is in compliance with the NEC.

Commentary: Sometimes known as sub-panels, these boxes are added-on to the existing panel rather than replacing the existing panel and installing a new and higher rated panel. For example, an add-on panel may be considered when an existing service panel has adequate capacity but no available expansion slots.

4.3.9 SERVICE DISCONNECT

Standard: Each occupant **shall** have ready access to the disconnect serving the dwelling unit in which they reside. The disconnect **shall** be clearly marked as a service disconnect and **shall** be installed at a readily accessible location either outside the building or inside at the nearest point of entrance of the service conductors. Service equipment containing only one main breaker **should** be used when altering the electrical service equipment.

Commentary: The main disconnect in the panel most often serves as the service disconnect. However, where it is not practical to place the service panel close to the meter and the point of entry for the service cable, then the NEC may require an additional, separate, disconnect at this entrance point.

4.4 BRANCH CIRCUITS

4.4.1 DEDICATED CIRCUITS

Standard: No less than one dedicated 20 amp circuit **shall** be present for each bathroom, and no less than two 20 amp small appliance branch circuits serving the kitchen. A dedicated circuit shall serve no other outlets.

In addition to the required branch and small appliance circuits, the individual appliances listed below draw enough current to warrant an individual dedicated circuit. When planning the scope of electrical rehabilitation work to be undertaken, serious consideration **should** be given to the capacity of the circuits and load demand. The number of small appliances used by the occupants, such as hair dryers, curling irons, portable heaters, coffee makers, toasters, etc. **should** be taken into consideration when planning the circuit loads and placement of the outlets to avoid overloading the circuit and to eliminate the use of extension cords or multiplex outlets (additional circuits are permitted).

All nominal 240 volt appliances or equipment, except individual baseboard heating units, **shall** be on separate circuits. Each 240 volt circuit **shall** be sized per the manufacturer's instructions and the NEC, to match the needs of the appliance for which it is intended.

Dedicated circuits for the following appliances **shall** be provided. The circuits for these appliances **shall** be sized per the manufacturer's instructions and the NEC. This will minimize the hazards of overloaded circuits, increase efficiency, and ensure future capacity for installation of additional convenience outlets:

Refrigerators
Freezers
Electric Range
Washing machine
Clothes dryer
Electric Water heater
Garbage disposal
Furnace
Microwave oven
Air conditioner
Dishwasher
Water Well & sump pumps
Septic aerators
Other major electricity consuming appliances

4.4.2 CIRCUIT LOAD DISTRIBUTION

Standard: All circuit wiring **shall** be properly sized to serve the load. The loads **shall** be divided among various circuits to attain a close balance of probable or calculated load as per *NEC Article 220-4 (d)*.

Commentary: Balancing circuits as well as the load reduces the strain on the electric system. A good way to lower energy costs, reduce strain on the system and reduce voltage drop, is to exceed code requirements by using bigger wire (e.g. use of #12 wire with 20 amp circuits though code permits use of #14 wire with a 15 amp circuit) so that equipment and appliances operate nearer to the rated voltage. Remember that the farther a wire is run, the greater the voltage drop which causes power loss and wastes electricity.

4.5 PREMISES WIRING

4.5.1 GENERAL REQUIREMENT REGARDING 3-WIRE SYSTEM

Standard: All 2-wire, ungrounded wiring **should** be replaced with 3-wire, grounded wiring, as required by the NEC.

Commentary: Wiring, like most everything else, has a useful life span. As wiring ages, the insulation becomes brittle, and may become cracked, worn, or frayed. It also loses some of its effectiveness. Existing conductors and connections may also become corroded or loose over time. In addition, episodes of overheating over its lifetime may have further deteriorated the wiring. Therefore, old wiring does not have the capacity that it had when new, and may be unsafe.

Electrical demands have also increased over time. When many of the houses that we work on were originally wired, many of the electrical appliances, computers, electronics, etc. that we currently use were not even yet invented. This has placed an additional demand on the old wiring.

Finally, because these old two wire systems are ungrounded they pose an added hazard to the occupants of the home. This is particularly an issue in wet locations such as kitchens and bathrooms, but can be a problem anywhere. In addition, as homes are rehabbed, we are often changing the dynamics of the home. For example, we may be adding insulation which can cause additional overheating of the old wiring. These changes can also make rewiring the house at a future date more difficult. For all of these reasons, replacement of old two-wire systems is a good investment. The only reason that OHCP does not require it in every case is because the costs can be substantial and may lead to additional walk-aways. However, OHCP strongly encourages full replacement of old, outdated two-wire systems whenever possible.

4.5.2 UNUSED SWITCHES, RECEPTACLES, FIXTURES AND CONDUCTORS

Standard: All unused switches, receptacles, fixtures and conductors **shall** be removed, where accessible.

Commentary: Switches or receptacles which do not provide power must be removed so that there is no confusion about whether they are malfunctioning.

4.5.3 UNUSED OPENINGS

Standard**:** Any unused openings in outlet, device, pull and junction boxes, conduit bodies and fittings, raceways, cabinets, auxiliary gutters, equipment cases or housings **shall** be effectively closed with knockout seals.

Commentary: Openings left in boxes may allow for rodents, building materials, etc., to come into contact with wire connections and cause shorts. In addition, they present a safety hazard in locations where they are accessible for people to stick their fingers (or other conductive probes) into the openings.

4.5.4 WIRE SPLICES

Standard: All splices **shall** be placed in accessible, approved junction boxes which are properly covered as required by *NEC Article 370*.

Commentary: Accessibility means that it can be reasonably gotten to without altering the structure. For example, an attic with plenty of crawl room would be considered accessible.

4.5.5 KNOB AND TUBE WIRING

Standard: All knob-and-tube wiring located in open cavities (e.g. open joist attics, basements) **shall** be replaced.

Commentary: OHCP recommends removing all knob and tube wiring (KTW) and installing grounded conductors which enable installation of grounded receptacles. Another option is disabling the KTW within the wall cavity and fishing THW wire for installation of a grounded receptacle.

4.5.6 CONSTRUCTION PROTECTION

Standard: Protection against physical damage of exposed electrical equipment **shall** be provided during and after construction.

4.6 RECEPTACLES

4.6.1 REPLACEMENT AND INSTALLATION

Standard: All replacement receptacles **shall** be listed or labeled by a qualified electrical products testing lab and installed per the manufacturer's instruction. All boxes **shall** be specifically designed for the purpose, properly sized, mechanically secure and have attached cover plates installed. Receptacles located in damp or wet areas **shall** be weatherproof and the wiring **shall** be run in boxes, conduit and fittings listed for wet locations as required by NEC Article 312.

4.6.2 REPLACEMENT OF EXISTING RECEPTACLES

Standard: All existing non-grounding type receptacles where a grounding means does not exist in the receptacle enclosure **shall** be replaced with new non-grounding type receptacles (the new receptacles are designed with the wider slot for polarity which limits the way that the cords are plugged in and helps to protect people from shock hazards), or with a ground fault circuit interrupter (GFCI) type receptacle, which **shall** be marked "no equipment ground", and may supply other grounding type receptacles on the circuit, which **shall** be marked "no equipment ground" and GFCI protected".

The other, and better option is to replace the wiring with a grounded, three wire system, and new, grounding type receptacles, or, if appropriate, GFCI protected receptacles, **shall** be installed. Grounded receptacles **shall not** be used with two wire, ungrounded circuits. All portions of the electrical system, including wiring, boxes, and receptacles **shall** be attached in a firm and tidy manner for both safety and aesthetic reasons.

When installing new wiring or replacing existing wiring with a new 3-wire system, the 2008 National Electrical Code requirements **shall** be met for tamper resistant receptacles and arc fault breakers. All new 3 wire systems **shall** require all general purpose receptacles to be replaced with tamper resistant receptacles and arc fault breakers to be installed in all rooms of the house, with the exception of laundries, kitchens, bathrooms, garages, and unfinished basements.

Commentary: If existing electrical receptacles are in a good and safe condition, replacement may be unnecessary. NEC Article 370-16 provides the requirements for determining the minimum size of box necessary for the number of conductors to be contained in it, so when adding conductors to existing boxes there is adequate space for the additional wires.

4.6.3 FLOOR RECEPTACLES

Standard: All receptacles located in the floor **shall** be either installed in an approved box listed and labeled for such use or **shall** be moved to the wall. Metal plates, or another safe method or material **shall** be used to cover the floor opening.

Commentary: Receptacles located in the floor are potential hazards and therefore need to be grounded and placed in approved and appropriately grounded floor mounted boxes or, where feasible, re-located to an adjacent wall.

4.6.4 RECEPTACLES ABOVE BASEBOARD HEATERS

Standard: Receptacles **shall** not be installed above electric baseboard heaters, unless provided for by the exception noted in *NEC Article 210-52 (a)*.

Commentary: Baseboard heaters get hot and having receptacles above them creates a fire hazard where cords might drape over the heater.

4.6.5 RECEPTACLE LOCATION in HABITABLE SPACES

Standard: All habitable spaces, occupiable spaces, laundry rooms and basements **shall** have receptacles. In each family room, dining room, living room, parlor, library, den, sun room, bedroom, recreation room, or similar room or area, receptacle outlets **shall** be installed so that at a minimum each wall has at least one receptacle; or in habitable spaces (i.e. bedrooms, living rooms, parlors, dining rooms and similarly used rooms), receptacles are spaced so that no point along the perimeter of the floor is more than 6' from a receptacle per NEC 210.52. Wherever practical, receptacle outlets **should** be spaced equal distances apart.

Exception: Where rooms are not regularly used by the occupants, the minimum number of receptacles per room as described above does not apply. In this case, the minimum number of receptacles per room **shall** be one (1).

Commentary: An adequate number of receptacles is critical for convenience and can be an important safety factor by eliminating the use of extension cords to power the various appliances found in today's homes. OHCP expects dwellings to have an adequate number of receptacles so that extension cords and multi-plug adapters are not required on a permanent basis. This is especially important in rooms which are used frequently. In some cases, such as homes occupied by a single elderly person, that is unable to climb the stairs to the upstairs bedrooms, this requirement may be less critical. In these cases, where the additional cost will make the project too expensive to complete, it may make sense to leave these rooms with less than the desired number of receptacles, but even in these cases, consideration should be given to future occupants in making the final determination.

4.6.6 RECEPTACLE LOCATION IN BATHROOMS

Standard: The bathroom **shall** be required to have at least one dedicated 20 amp receptacle outlet, which **shall** be GFCI protected, and **shall** be located within 3 feet of the outside edge of each basin. The receptacle **shall** be located on a wall or partition that is adjacent to the basin or basin countertop, or on the side or face of the basin countertop, not more than 12 inches below the countertop. The receptacle **shall** be located at least 30 inches and not more than 48 inches above the floor. Receptacles **shall not** be located within or directly over a bathtub or shower stall, and **shall** be at least 12 inches from the outer rim of any bathtub or shower opening.

4.6.7 RECEPTACLE LOCATION IN KITCHENS

Standard: The kitchen **shall** have the equivalent of 2 GFCI protected duplex receptacles, on two separate 20 amp appliance circuits, at the kitchen counter top space, as a minimum. Kitchens **should** have GFCI protected receptacles installed at each wall counter space every 48 inches, so that no point along the counter line is more than 24 inches from a receptacle outlet. The kitchen **shall** also be provided with a non-GFCI protected receptacle for the refrigerator which **should** be located directly behind the refrigerator.

Commentary: GFCI receptacles provide additional shock protection in areas such as kitchens where the risk of electrical shock are increased due to the presence of moisture.

4.6.8 EXTERIOR RECEPTACLES

Standard: Exterior outlets **shall** be GFCI weather protected per NEC Article 210-52. OHCP recommends that each dwelling **should** have 2 weather protected GFCI receptacles installed, one located at the front and one located at the rear of the unit for convenience and safety, particularly if the occupants use power tools outside or decorate with exterior lights.

Commentary: The improper use of extension cords which are not rated for wet locations is a common hazard. When the electric system is replaced/altered, the installation of exterior receptacles would not significantly increase the cost and would greatly increase the convenience and safety of the occupants and needs to be considered.

4.6.9 AMPERE RATINGS OF RECEPTACLES

Standard: Receptacles installed on a branch circuit **shall** have the same ampere rating as the branch circuit itself. All newly installed (3 wire grounded system)15 amp and 20 amp 120 volt receptacles **shall** be of the grounding type as required by *NEC Article 210-7(a)*.

To ensure safe operation of the over-current protection system, all receptacle amperage **shall** match the requirements of NEC Table 210-24. For example, a 15 amp circuit **shall not** have receptacles with greater than a 15 amp receptacle rating.

4.7 GFCI PROTECTION

Standard: Receptacles located within six feet of a sink, located in a bathroom, at kitchen counter top space, in a garage, in an unfinished basement, or located outside **shall** be GFCI protected as required by *NEC Article 210-8 (a)*.

Exception: Single use, dedicated receptacles for use by equipment and appliances such as washing machines and sump pumps, **shall not** be GFCI protected, and **shall** be single, rather than duplex receptacles.

4.8 LIGHTING FIXTURES

4.8.1 MATERIALS AND INSTALLATION

Standard: All replacement fixtures **shall** be listed or labeled by a qualified electrical products testing lab and installed per the manufacturer's instructions. No fixture or socket **shall** hang from a base by unsupported wiring.

Commentary: If existing fixtures are in good and safe condition, securely and tidily attached, they may not have to be replaced. However, fixtures must be securely fastened to the framing members by mechanical means, such as bolts, screws, rivets or approved clips.

4.8.2 FIXTURE AND SWITCH LOCATION

4.8.2.1

Standard: **General requirements:** A permanently installed lighting fixture controlled by a wall switch **shall** be required to be located in each bathroom, kitchen, laundry room, furnace room, basement, at all exterior doors, common hallways, common stairways, and attached and detached garages with existing electric power. In other habitable rooms including living rooms and bedrooms, permanent lighting fixtures which are wall switch controlled, or wall switch controlled receptacle outlets **shall** be installed. Care **should** be taken when replacing existing fixtures not to overload existing wiring. Also see *RRS 6.2.1*.

Commentary: Prior to 1984, wire installed in homes was rated for 60 degrees centigrade; many present design incandescent fixtures are marked as requiring 75 or 90 degree centigrade supply conductors. Therefore, if not replacing the wiring, care must be taken in the selection of a replacement fixture.

4.8.2.2

Standard: **Switch location:** Switches **shall not** be installed in tub or shower areas. New switches **shall not** be located behind the door swing. All new wall switches **shall** be located for convenient and readily accessible use.

Commentary: Proper lighting is a matter of safety and convenience. As a particular safety concern, locations where people may come into contact with water and electricity are especially hazardous and should be avoided.

4.8.2.3

Standard: All light fixtures installed in closets **shall** be surface mounted or recessed incandescent with all lamps completely enclosed, or a surface mounted or recessed fluorescent fixture with enclosed lamps and **shall** be installed on the wall 6 inches away from any storage as required by *NEC Article 410-8*.

Commentary: Due to the potential fire hazard in a closet, where flammable materials may come into contact with a hot light bulb, the removal or replacement of existing closet light fixtures to meet this standard must be done. Open incandescent lamps (bulbs) cannot be replaced with open compact fluorescent lamps.

4.8.3 FIXTURE SELECTION ENERGY CONSIDERATIONS

Standard: Fixtures and lamps (bulbs) installed in areas lighted for long periods (e.g. several hours per day) **should** be selected for energy efficiency. For example, fixtures that accommodate compact fluorescent lamps (CFL) **should** be considered for kitchens, hallways and stairways. Also, CFL fixtures that are photo-cell controlled **should** be considered for outside porch and door lighting.

Commentary: When a CFL fixture is installed, a lamp must be provided and the occupant must be educated about the long term cost saving benefits of energy-efficient fixtures. For additional information on electric lighting standards, see RRS Section 6.2.1 and RRS Appendix F.

4.9 SMOKE DETECTORS

Standard: Each dwelling **shall** have approved smoke detectors, installed in accordance with the manufacturer's instructions, located as described in the *RRS 6.6.3*. Smoke detectors **shall** draw their primary power from the building wiring, with battery backup, and without interruption except for that required for over-current protection. Power **shall** be 120 volts. The wiring **shall** be interconnected, so that all detectors sound the alarm when any one senses smoke.

Commentary: Smoke detectors must be approved, listed, installed in accordance with the manufacturer's instructions and placed so that adequate warning is audible in each bedroom. Choose a circuit used often such as a bathroom light so that if the circuit fails it is noticed immediately. Education of the occupants about the proper operation and maintenance of smoke detectors is necessary. Occupants that do not understand these concepts may seek to disconnect the equipment because of "false alarms" or frequent "chirping". Smoke detectors require frequent cleaning to keep them free of dust and other contaminants and the batteries must be changed frequently in compliance with the manufacturer's instructions (typically every six months). OHCP also recommends placement away from showers and kitchens, if possible. These considerations will help to alleviate much of the frustration of occupants with these devices, and will help the detectors to operate as designed.

CHAPTER FIVE

PLUMBING

GENERAL REQUIREMENTS

The plumbing system must provide for a safe, adequate supply of potable water to the premises and provide for a safe, sanitary method of disposing of liquid and solid wastes. To be effective, the following basic plumbing principals need to be followed:

- Fumes from sewer gases can be toxic, and must not be allowed to enter the building air supply.
- Sewer leaks and/or improper disposal of sewage can create unsanitary conditions, lead to deterioration of other building components, and can create environmental hazards. Sewer leaks must be identified and repaired, and improper disposal methods must be discontinued.
- Water must be free from hazardous contaminants, and safe for drinking, bathing, and other uses. The water must also not be overly corrosive to the piping material and fixtures.
- An adequate supply of water must be available for all drinking, bathing, toilets, laundry, and cleaning tasks. This will require adequate pressure at each outlet.
- Water leaks into buildings can create hazardous indoor air quality conditions, and can lead to an environment favorable to mold, mildew, and other contaminants. Water leaks can also lead to severe deterioration of building components, and the source of moisture can encourage termites and other unwelcome pests.

The plumbing system includes water supply lines; drain, waste, and vent pipes; plumbing fixtures such as faucets, hot water heaters, sinks, lavatories, toilets, bathtubs, showers and any devices which are permanently or temporarily connected to the water distribution system of the premises and demand a supply of water or discharge waste water, liquid-borne waste materials or sewage either directly or indirectly to the drainage system of the premises, or which require either a water supply connection or a connection to the drainage system of the premises. All piping, fittings, devices, faucets, vessels, containers and receptacles that are used to supply, distribute, receive or transport potable water or liquid or solid wastes are considered as plumbing.

5.1 INSPECTION AND REPAIR REQUIREMENTS

5.1.1 REPLACEMENT OR REPAIR OF PLUMBING SYSTEM

Standard: When a plumbing system is replaced or partially replaced, the system used for the replacement portion **shall** be designed, constructed and installed in conformity with the *Ohio Plumbing Code (OPC)* using accepted engineering practice and workmanship.

Commentary: Older houses may make use of materials and methods which differ in certain ways from those in common use today. Yet current methods of good workmanship and new standards must apply to any new work that is being done. (It may be permissible, for example, to leave galvanized piping as supply piping in a house if it is in good shape and is functioning well. However, when replacing supply lines, copper is a better choice). You should consider reviewing your plumbing plan with your local plumbing inspector before starting work. Also remember that OPC and most other codes are minimum standards and many good plumbing installations will exceed these standards in design, workmanship and selection of materials. Another consideration when dealing with supply lines and fixtures is their lead content. Lead is a safety hazard and OHCP requires the use of lead-free solder, piping, fittings and fixtures.

5.1.2 STRUCTURAL INTEGRITY

Standard: Supply, drain, waste, and vent lines **shall not** run through structural members in such a way that will interfere with their ability to sustain the imposed loads. Drilling and notching of structural members **shall** conform to the *OPC Section 307.1 and 307.2, and the RRS 2.2.3, 2.3.3, and 2.6.4*.

5.1.3 INSPECTION GUIDELINES

Standard: Prior to choosing a contractor to undertake rehabilitation and as a part of the process of determining the extent of rehabilitation work, a thorough inspection **shall** be done to determine the scope of the plumbing that is not in compliance with the RRS. All parts of the plumbing system **shall** be inspected to ascertain whether they are functioning properly and adequately, are free of leaks and are otherwise following the guidelines set out in *the RRS and the Ohio Plumbing Code*. When problems are found, other tests will need to be done (for example, if a faucet appears to have low pressure, pressure tests and/or supply line calculations **shall** be done to determine the extent and cause of the problem). Plumbing inspections and all plumbing work **shall** be done by qualified people who are experienced in working on plumbing systems and knowledgeable in the field. Clear and detailed work specifications **shall** be written for all work to be completed and given to contractors prior to submission of bids. For other required plumbing inspections, refer to the RRS, 5.2.1, and 5.4.1. All newly installed plumbing work **shall** be inspected and tested according to *Section 312 of the OPC*.

5.2 **WATER SUPPLY**

5.2.1 WATER SOURCE

Standard: All water service entry lines **shall** be properly connected to either a public water supply system or an approved private water supply system in conformity with the *OPC, Section 602*. When connected to a private system, an analysis of water by the local health department, or other qualified entity, **shall** be done to determine the bacterial content for safety and, when necessary, appropriate corrective measures **shall** be implemented. Newly installed water supply lines **shall** be flushed out in conformance with the *OPC, Section 610*.

5.2.2 WATER QUALITY

Standard: Supply systems **shall** provide for the delivery of potable water through a safe system of piping, free from leaks and defects and not subject to the hazards of backflow. The water **should** be free of pathogenic organisms; free of toxic chemicals; relatively free of odor, taste, color, and turbidity; free of excessive minerals; and relatively non-corrosive. In the event that water quality is sub-standard, corrective measures to improve water quality such as water filtering, softening and/or conditioning equipment **should** be installed, as needed.

Commentary: In some cases, it could be necessary for further tests to be completed by a lab to determine the presence of toxic chemicals, mineral levels, etc. See also *the RRS Section 6.7.3*. Well water is often acidic or corrosive and piping systems for wells could need replaced more quickly than if they were on a public water system.

5.2.3 FROST PROTECTION

5.2.3.1

Standard: **Pipe Protection:** All newly installed exterior water lines **shall** be buried a minimum of 6” below the local frost line as established by the local building code (a minimum of 4’ below grade for jurisdictions with no local building authority established frost line) and comply with all of the *OPC requirements, particularly Section 306 on trenching, excavation, and backfill*. All existing water lines **should** enter and exit the building 6 inches below local frost depth and **shall** not be exposed to the outside. All interior water distribution lines in unheated areas or in exterior walls **shall** be moved to heated areas or insulated to prevent freezing as required in OPC Section 305.6.

Commentary: Ohio’s climate could allow pipes and other water distribution equipment to freeze if left exposed to the elements. Proper precautions must be taken to avoid potential frozen pipe damage.

5.2.3.2

Standard: **Hose bib protection:** All hose bibs (water faucets) in unheated or exterior locations **should** be frost proof and anti-siphon and designed so that they extend into a heated area through the building insulation and the water line to the hose bib **should** be equipped with an accessible shut-off valve located within a heated area. Where no exterior hose bib exists, one **should** be installed if the occupants need it. All newly installed hose bibs **shall** be frost proof and anti-siphon and designed so that they extend into a heated area through the building insulation and the water line to the hose bib **shall** be equipped with an accessible shut-off valve located within a heated area.

Commentary: The vacuum breaker or anti-siphon valve prevents siphonage or back flow when an air gap is not continually in existence. An example of a problem that might occur would be if you had a hose attached to your faucet and laid the other end in a puddle of antifreeze or oil from your car or even in a mud puddle with a high bacteria count. There would be potential for the hose to siphon the contaminants out of the puddle and into your water supply system. Air gaps and vacuum breakers are designed to prevent this. Be aware that this possibility can exist at other places where no air gaps exist such as laundry tubs or sinks with hoses.

Also be aware that freezing of hose bibs can cause water pipes to burst, and that, even though the hose bib has been in its present location for many years that rehabilitation of the house may have changed the environment of the house through air sealing or insulation in a way that would make the pipes more likely to freeze, or a particularly cold winter may create the conditions necessary for pipe damage to occur. Many households may not have the funds to make the needed repairs, and be forced to choose to go without water. For these reasons, OHCP recommends that all existing hose bibs be upgraded to the anti-siphon, frost proof type.

5.2.4 QUANTITY AND PRESSURE

5.2.4.1

Standard: **Building entrance**: The minimum average static pressure at the building entrance **should** be between 40-80 psi for either private or public water service and meet the requirements of the *OPC Section 604*. If pressure exceeds 80 psi, an approved pressure reducing valve **shall** be installed in accordance with the *OPC Section 604.8*. This will help to prevent fixtures from becoming ruined due to high pressure. If pressure is less than 40 psi then the system **shall** be evaluated to determine reasons for low pressure and corrective measures **should** be taken. One possibility for improving water pressure is outlined in the *OPC Section 604.7*.

Commentary: Inadequate water pressure can make life difficult for the occupants. They may find it difficult or impossible to conduct routine tasks such as laundry or bathing. Pressure loss to a house on a public system can be caused by inadequate supply for the demand, inadequate piping size, inadequate tank height for the property, etc. Pressure loss to a house on a private well can be the result of an improperly pressurized tank, an improperly working tank bladder, problems with the pump, inadequate water supply, etc. These problems are often exacerbated by corroded or inadequately sized supply lines within the building. *RRS Appendix 5-A* provides a methodology for properly sizing supply lines (or checking to see that they are of adequate size). Efforts need to be made to determine the reasons for the inadequate pressure and appropriate measures taken to remedy the problem.

5.2.4.2

Standard: **Supply lines and fixtures:** Supply lines and fixtures **shall** be capable of performing the function for which they are designated. Interior water distribution lines **shall** at all times supply water to the plumbing fixtures in sufficient volume and at a pressure adequate to enable them to function satisfactorily. New water supply lines **shall** be sized and installed according to accepted engineering practice (see *the RRS Appendix 5-A or the OPC, Section 604* for supply piping size guidelines). All openings in floors, walls, ceilings, cabinets, etc. around supply lines **shall** be sealed in conformance with the *OPC, Section 304*.

Commentary: Water volume and pressure can change over time as pipes, fittings, and fixtures corrode and become constricted. Also the design of the system, the amount of water pressure and volume supplied by the main line coming into the building, and other factors affect the pressure at each fixture. See *the RRS Appendix 5-A, Table 5-A.1 or the OPC Table 604.3* for recommended pressures for satisfactory functioning of fixtures.

5.2.5 <u>VALVES</u>

5.2.5.1

Standard: **Service valve:** All main water lines **shall** have an accessible service shut-off valve located near the entrance of the water service into the house that meets the requirements of OPC Section 606.1(2). This valve **shall not** be of a type that will restrict the flow of water when fully open (port open). Existing valves **shall** be tested to ensure that they function properly and do not leak.

Commentary: A main service shut-off valve is necessary to provide for shutting off water in case of an emergency or a leak in the system. It must be located inside the building in a convenient location as close as reasonably possible to where the water supply line enters the house to prevent leaks from occurring in the line ahead of the valve. If the supply entrance to the building is not in a convenient location, a second valve might need to be installed at the first easily accessible location to ensure that the water can be quickly shut off.

5.2.5.2

Standard: **Fixture and shut-off valves:** All hot and cold water supply lines feeding sinks, lavatories, bathtubs, showers, toilets, water heaters and other plumbing fixtures **shall** be equipped with functional and accessible shut-off valves. For tubs and showers, the shut-off valves may be located in a basement in close proximity to where the waterlines feed the tub or in an access panel in the wall directly behind where the faucet controls are located.

Commentary: Valves at each fixture make it possible for occupants to turn off the water to an individual fixture quickly and without turning off all water in the event of problems with a fixture, which may prevent flooding and deterioration of housing components. It also makes the changing of fixtures an easier, less expensive task.

5.2.6 AIR GAPS

Standard: There **shall** be a one inch minimum vertical air gap between the flood rim of a fixture and the lowest end of a water supply outlet in conformity with the *OPC Section 608*

Commentary: Air gaps are necessary to prevent contamination of the water supply by back flow or siphonage of wastewater or other contaminants.

5.2.7 SUPPORT OF PIPING

Standard: All supply lines **shall** be properly supported to prevent sagging and/or breakage, and **shall** meet the requirements of the *OPC, Section 308 and Table 308.5*. Attention **should** be given also to noise reduction through proper support, insulation, and design techniques. New piping **shall** be installed in a neat and efficient manner. Existing supply lines that are a mixture of various materials, are inefficiently run, and/or are showing signs of deterioration **shall** be closely inspected, and where the system is in poor condition so that the potential for leaks is likely, then the supply lines **should** be replaced.

5.2.8 JOINTS BETWEEN DISSIMILAR METALS

All joints between dissimilar metal pipes **shall** be made with dielectric fittings in conformity with the *OPC Section 605.23*. Dielectric fittings help to prevent joint deterioration due to electrolysis. Plumbing system components **shall** be carefully inspected to determine the extent of corrosion and the integrity of joints, fittings, and other system components. Where defects are found, corrective action **shall** be taken. An example of a common location for dielectric fittings would be where copper supply lines attach to a hot water heater.

5.3 PLUMBING FIXTURES

5.3.1 GENERAL REQUIREMENTS

Standard: All plumbing fixtures **shall** be made of materials that are impervious to water, easily cleanable, and **shall** not have leaks or defects which interfere with their function and **shall** meet the requirements of the *OPC Section 402.1*. While fixtures need not be new to be adequate, they **shall** be in good usable condition. All new fixtures **shall** be installed using good workmanship. Care **shall** be taken to adequately seal or caulk carefully wherever appropriate to provide protection from water damage.

Commentary: Plumbing fixtures include water closets (toilets), urinals, bidets, faucets, lavatories, sinks, showers, bathtubs, floor drains and drinking fountains, and a separate class of plumbing fixtures known as plumbing appliances including washing machines, dishwashers, water heaters, garbage disposals, water softeners, water purifiers and hot water dispensers.

5.3.2 CONSTRUCTION AND INSTALLATION OF FIXTURES

Standard: Fixtures shall conform to the following guidelines in terms of how they are constructed and installed:

a. All Replacement plumbing fixtures **shall** comply with the ASSE/ANSI standards listed in reference to the RCO and the OPC, plumbing fixtures.

b. All replacement water closets **shall** be water conserving low consumption (not to exceed 1.6 gallons per flush) and **shall** conform to the *OPC, Section 420.1 and 420.3*.

c. All replacement sink faucets **shall** be that of a water conserving type which deliver a maximum flow rate of 2.2 g.p.m. at 60 psi, and in compliance with the *OPC, Section 424.1*

d. All replacement bathtub and shower fixtures **shall** use anti-scald control valves. The control valves of the pressure balancing, thermo-static mixing or the combination pressure balancing/ thermostatic mixing valve types **shall** be controlled and designed to limit water temperature change to a maximum setting of 120 degrees F in compliance with the *OPC Section 424*. Access panels **should** be provided to these valves.

e. All fixtures **shall** be rigidly supported and securely attached in a manner consistent with normal installation procedures, installed level, and conform to the *OPC, Section 405*.

f. All faucets **shall** have the hot water connected to the left side of the faucet being installed according to the OPC, Section 607.4. Existing supply lines that are reversed **shall** be changed.

g. All trap sizes **shall** not be less than 1 ½ inches i.d. (inside diameter) for showers, kitchen sinks, dishwashers, laundry tubs, and bathtubs; not less than 1 1/4 inches i.d. for lavatories and not less than 2" i.d. for washing machines in compliance with the *OPC, Table 709.1*.

h. All plumbing fixtures other than toilets **shall** be provided with approved strainers in conformity with the *OPC, Section 304.2*.

i. If a garbage disposal is present, it **should** be in good working order. If not It **should** be removed, repaired or replaced.

j. Water softener equipment, if present, **shall** be in operable condition and free from leaks or possible contamination through back flow of sewer or other sources and **shall** be properly discharged. If not, it **shall** be removed, repaired or replaced. New equipment **shall** be installed in accordance with the manufacturers' instructions.

k. All plumbing fixtures and plumbing appliances **shall** be free of leaks or **shall** be repaired or removed. It is the responsibility of the owner to maintain their appliances in working order.

l. Water heaters **shall** be in good functional condition and properly installed. See *the RRS Section 3.8*. For pan requirements refer to the *OPC 504.7*.

Commentary: Conserving water is in the best financial interests of the occupants over the long run as well as in the interest of society and the environment as a whole. Therefore, OHCP encourages the use of water and energy conserving fixtures and equipment whenever it is practical.

5.4 SANITARY DRAINAGE

5.4.1 CONNECTION TO AN APPROVED SEWAGE SYSTEM

Standard: All fixtures **shall** be connected to an approved sewage disposal system in compliance with the *OPC, Section 701.2*. All private septic systems **shall** be tested to ensure that they are properly and adequately functioning. If problems are found, they **shall** be corrected. New sewage disposal systems **shall** comply with EPA requirements and local health department regulations.

Commentary: The sanitary drainage system consists of the pipes designed to provide adequate circulation of air, exhaust of foul odors, prevent loss of water seals in the traps and assist with the flow of wastes out of the building into an approved sewage disposal system. Unapproved private systems would include pit privies, cesspools, ponds, lakes, streams and rivers. See also *RRS Section 6.7.5*.

5.4.2 INSTALLATION DETAILS

Standard: Building drainage systems **shall** be properly installed, connected, and maintained in working order, free flowing, and free from leakage of water or sewer gases. Some of the causes of leakage are corrosion, poorly made connections, defective materials, settling or moving of the ground, temperature changes, and freezing. Sizing of new drainage systems **shall** be accomplished using the *OPC, Chapter 7*. *Chapter 7 of the OPC* **should** be used to determine the adequacy of the existing system. Where deficiencies are found, the size or design of the existing system **should** be altered in conformance with *OPC Chapter 7*. Existing plumbing that has a mixture of a variety of different types of piping or fittings or that is run in an inefficient manner **should** be replaced.

Waterways **should** also have smooth interiors and **should** conform to table 704.1 for pipe slope. All new installations of drainage systems, portions of systems, and/or repairs **shall** meet all applicable *OPC codes* and all preexisting drainage systems **shall** conform to the following:

a. All drainage system repairs or replacements **shall** be done with approved fittings that conform to the pipe being used and are in conformity with the *OPC Section 702.4* and provide for a smooth drainage flow.

b. All drainage systems **shall** provide a free flowing waterway and maintain a continuous and appropriate slope.

c. All plastic DWV (drain/waste/vent) pipes **shall** be ABS or PVC - DWV Schedule #40, and other materials **shall** comply with the *OPC Section 702.1*

d. All waste stacks **shall** be provided with an accessible clean out located on the stack closest to where the waste pipe exits the house in accordance with the *OPC Section 708.3.4 and 708.3.5*.

5.4.3 TRAPS

Standard: All fixtures **shall** be trapped and all traps **shall** conform to the following specifications:

a. All waste outlets **shall** be separately trapped by a water seal trap as near to the fixture as possible, but in no case more than 24 inches from the fixture in compliance with the *OPC Section 1002.1.* Also, see exceptions listed under this section.

b. All traps **shall** be set level with respect to their water seals and **shall** be protected from frost and freezing weather as stated in the *OPC Section 1002.7*

c. All plumbing fixtures **shall** be trapped with a water seal not less than 2 inches or more than 4 inches and **shall** meet the requirements of the *OPC Section 1002.4*.

d. Traps **shall** be of standard design and self-cleaning. Bell traps, “S” traps and Drum traps are prohibited as noted in OPC Section 1002.3

e. Fixture trap size **shall** be sufficient to drain the fixture rapidly and in no case less than 1 1/4 inches I.D. for lavatories; 1 1/2inches I.D. for tubs, showers, kitchen sinks, , and dishwashers; 2 inches I.D. for washers and floor drains; and **shall** be in conformity with the *OPC Section 1002.5*.

f. No trap **shall** be larger than the drainage pipe into which it discharges as stated in the *OPC Section 1002.5*.

g. Access panels **should** be provided for all fixtures with concealed connections.

h. Any recess provided for the connection of traps and all openings through walls and floors for traps and drainage system components **shall** be sealed to be insect and vermin proof. Also see the *OPC 1002.8*.

Commentary: The purpose of traps is to prevent sewer gases from entering the house. This is accomplished by a water seal in the traps through which the sewer gases cannot pass.

5.4.4 VENTS

Standard: Plumbing systems **shall** be designed to prevent sewer gases from entering the house and to allow waste to adequately drain into an approved sewer system, **shall** be vented to the atmosphere so that water released from the fixture may draw in air to allow for a smooth and even drainage flow and **shall** not siphon the water from the traps, and **shall** conform to the following venting guidelines:

a. All plumbing systems **shall** have at least one main vent stack, running from the main building drain up through the building and terminating outdoors on the roof and sized in accordance with the *OPC Section 903.1* and for frost closure in accordance with the *OPC Section 904.2*. If it is the only plumbing vent connected to the system, it **shall** be no less than 3” inside diameter from top to bottom.

b. All plumbing vent systems **shall** be used only for the purpose of venting the plumbing system in compliance with the *OPC Section 901.4*.

c. Existing vent extensions through the roof **shall** terminate at least 6 inches above the high side of the roof penetration. All newly installed plumbing vents **shall** be a minimum of 12” above the roof penetration and in conformity with the *OPC Section 904.1*. All plumbing vent terminals through the roof **shall** be flashed water tight in conformance with the *OPC, Section 904.3*, and **should** be a minimum of 3” in diameter, in conformance with the *OPC, section 904.2*.

d. All vent pipes **shall** be installed so that they are sloping back to the waste pipe to allow for moisture and condensation to drain back to the main drain line in conformity with the *OPC, Section 905.2*.

e. All vent pipes which terminate in the attic **shall** be extended through the roof or replaced. All vent pipe terminations **shall** be in conformance with the *OPC, Sections 904.5, 904.6, and 305.9*, and **shall not** terminate near any windows or doors, under soffits, less than 10' above average grade level, less than 10' from the lot line, and **shall** be protected from physical damage from vehicles. All vent pipes which terminate in the attic **shall** be extended through the roof or replaced.

f. All new installations of drainage Systems or portions of systems **shall** be properly vented and meet all of the applicable requirements of the *OPC, Chapter 9*. Existing plumbing systems **should** be vented in accordance with the *OPC, Section 906* using the methods outlined in the *OPC, Chapter 9*.

g. Air admittance valves are allowed provided they are the approved type, which is ASSE 1051. If there is any doubt about the type or age of the air admittance valves, they **shall** be replaced using the approved type. Some of the old types of air admittance valves develop leaks over time, which allow sewer gases to enter the structure. All air admittance valves **shall** be installed in conformance with the *OPC, Section 917*.

CHAPTER SIX

ENVIRONMENT

GENERAL REQUIREMENTS

The concept of environment takes in everything that potentially affects the well being of the occupants, the neighborhood, and the earth, and encompasses a lot of things not covered in the other chapters. Many of the items covered in this chapter are also tied to the other chapters. For example, indoor air quality is related to a discussion of windows (Chapter 2), proper operation of fuel burning appliances (chapter 3), proper venting of sewer gases (chapter 5), and the use of safe work practices (chapter 7). The environment includes more than just the house, but also takes in the premises. Though many of the items that could be covered here are discussed in the other chapters because they are related to specific systems, this chapter attempts to also pick up areas that are important, but get lost because they do not fall well within one of the specific systems. In general, the chapter on environment is responsible for the following:

- Setting general living standards in regards to the general condition of the property with regards to critical needs such as light, fresh air, sanitation, moisture control, fire safety, safe water supply, and health hazards.

- Setting standards for occupancy limitations and requirements for habitable spaces.

- Sets standards for accessibility.

- Sets standards for other federal requirements such as historic preservation and floodplain management.

- Outlines guidelines for dealing with accessory structures and other exterior work.

Note that the requirements associated with lead-based paint have been moved to Chapter 7. Following are specific guidelines associated with the environment.

6.1 PREMISES AND DWELLING CONDITION

6.1.1 PRIORITIZATION OF A SAFE SANITARY ENVIRONMENT

6.1.1.1

Standard: Inhabited Buildings: Each inhabited building **shall** provide a safe, sanitary and satisfactory environment for the occupant(s) and the neighborhood. The dwelling **shall** meet the requirements of the *RCO, 115.2*.

6.1.1.2

Standard: The property on which each inhabited dwelling is located **should** provide a safe, sanitary and satisfactory environment for the occupant(s) and the neighborhood. The sub-standard premises conditions **should** be prioritized, with higher priority given to those that most directly affect the health and safety of the occupants and the structural integrity of the dwelling.

Commentary: Although rehabilitation must focus on correcting the dwelling's sub-standard conditions, the opportunity for eliminating the unsanitary, unsafe and unsightly conditions on the property surrounding the dwelling must not be overlooked. The condition of the property must be considered as part of a comprehensive approach to rehabilitation. Property left in poor condition can decrease the effectiveness of the rehabilitation work done to the home and reduce the impact of the rehabilitation on the neighborhood. For example, improper site drainage can continue to cause erosion and moisture damage to the home and excessive rubbish can continue to stifle neighborhood revitalization.

However, because rehabilitation funds are limited, OHCP recognizes that all sub-standard premises conditions cannot be eliminated. Therefore, grantees must prioritize the correction of sub-standard premises conditions to those that most directly affect the health and safety of the occupants and the structural integrity of the dwelling. For example, a decayed tree leaning over the home would need to be removed while a deteriorated patch of the driveway may be ignored.

OHCP encourages grantees to establish policies regarding owner responsibilities to remove blighted conditions prior to rehabilitation and to maintain the premises in a blight-free condition after rehabilitation. For example, depending upon the owner's ability, grantees may require owners to clear the property of accumulated rubbish, motor vehicles and other unsanitary or unsightly conditions prior to receiving financial assistance. Locally adopted Minimum Housing Standards or property maintenance codes could also apply.

6.1.2 GARAGES AND OUTBUILDINGS

6.1.2.1

Standard: **Existing unattached garages and outbuildings:** Unattached garages and outbuildings **should** be free of hazards to the occupant's health and safety. Existing conditions that are hazardous to the health and safety of occupants **should** be corrected. For example, existing electrical wiring, fixtures and receptacles that are hazardous **should** be repaired consistent with *the RRS Chapter 4, Electrical System requirements* or the unsafe wiring **should** be removed and taken out of service. Home repair funds **shall not** be used to repair deficiencies on unattached garages and/or outbuildings unless the home repair is for lead work to the house and premises.

Commentary: Accessory structures cannot be rehabilitated to the same extent as dwellings. However, conditions that are hazardous to the health and safety of the occupants need to be corrected. Unattached garages which significantly detract from the overall appearance of the property or neighborhood may be repaired as a part of a rehabilitation, provided the repairs are minimal in cost and incidental to the rehabilitation of the dwelling.

If repairs to correct deteriorated structural conditions are done to an accessory structure as a part of the rehabilitation to a house, the repairs shall be minimal but sufficient to restore adequate structural integrity and appearance and stabilize structural deficiencies. With permission of the owner, demolition of the structure may also be an option for dealing with the hazards associated with an accessory building.

6.1.2.2

Standard: **New garages or outbuildings:** When constructing a house, and a need is identified for additional storage, a garage, or outbuilding **should** be constructed. All newly constructed garages and outbuildings **shall** meet all applicable requirements of the *RCO, including the requirements of the other referenced codes*.

6.1.3 DRAINAGE

Standard: The premises near the house **should** be free from large or deep depressions that routinely collect stagnant water, and free from improper grading or settling that causes erosion or the potential for infiltration of water into the house. All drainage problems **should** be addressed including proper grading; the addition of fill and topsoil, as needed; and proper seeding, as necessary, to prevent further erosion and to provide for a usable ground covering. Also see *RRS 2.1.6*, foundation perimeter drainage and moisture control. Surface drainage, **should** be diverted to a storm sewer conveyance or other approved point of collection to not create a hazard. New lots **shall** be graded to drain surface water away from foundation walls.

6.1.4 CISTERNS

Standard: Unused, in ground cisterns **shall** be evaluated for potential safety hazards, and **shall** be properly filled and covered as necessary to eliminate the potential safety hazard. Cisterns that are currently used **shall** be evaluated, considering the lifestyle of the client, and the potential hazards that they present, and appropriate measures taken. If they are to remain in use as the only viable and affordable source of drinking water, then the water **shall** be tested to ensure that it is safe (*See the RRS, 5.2.1 and 5.2.2*).

Commentary: Abandoned cisterns (cisterns no longer used as a source of household water) are a potential safety hazard to people, animals or structures. They are also a possible source of contamination to ground water. To eliminate safety and environmental concerns and minimize liability exposure, they must be properly filled. Often homes depended upon roof fun-off collection and cistern storage for household water. Although many remain in place, they are often not required as a source of household water. The cistern may pose environmental and safety hazards in a manner similar to abandoned wells.

6.1.5 PAVED SURFACES

Standard: Sidewalks, driveways, patios and other paved surfaces on the premises **should** be free from hazards which can cause tripping and falling. Paved surfaces adjacent to the foundation **shall** not slope towards the structure so that water can potentially collect or drain towards the foundation. The repair of paved surfaces **shall** be minimal in cost and incidental to the rehabilitation of the dwelling. Paved surfaces that are deteriorated but do not present a hazard or a drainage problem **shall not** be repaired.

6.1.6 RETAINING WALLS AND FENCES

Standard: Walls required to retain earth around and adjoining the dwelling such as terraced grades near the structure or exterior sub grade basement entry ways and stairways **shall** be free of structural deficiencies which present an imminent hazard to the occupants and to the structural integrity of the structure. Retaining walls around and adjoining the dwelling which are bowed and/or leaning outward to the degree that failure and collapse in the immediate future is likely **shall** be repaired or replaced. Such walls which are not an immediate threat, but which will continue to deteriorate and eventually fail **should** be repaired to stabilize deficiencies. Repairs **should** be sufficient to stabilize the concern and eliminate the causes of the ongoing deterioration. Other walls and fences that pose a serious safety hazard to persons **shall** be repaired or removed. Fencing that is not necessary for specific safety reasons **shall not** be installed.

Commentary: Due to the potential for significant costs associated with this type of repair, OHCP does not recommend the wholesale replacement of retaining walls, unless evaluation determines such action to be necessary. Instead, OHCP suggests the repair or replacement of the affected areas of the wall. Similarly, repairs to deteriorated fencing is generally out of the scope of work associated with OHCP programs. Only if there is a serious safety hazard requiring the need for repairs or replacement may this be considered.

6.1.7 RUBBISH AND GARBAGE

Standard: The premises and the dwelling **shall** be free from accumulations of rubbish and/or garbage that present health and safety hazards to the occupant or to the persons employed by the rehabilitation program. All such rubbish **should** be kept in covered containers for proper disposal. The owner **should** be informed of the need to maintain safe and sanitary premises.

Contractors **shall** clean the premises at the end of each work day of all construction debris; which **should** be piled in an agreed upon and nonhazardous location onsite, placed in appropriate containers for disposal, or removed from the site. Similarly all materials, tools, equipment, ladders and other items used by the contractors **shall** be stored in a safe and tidy manner or removed from the site at the end of each day.

Commentary: An excessive accumulation of rubbish and garbage is a clear health and safety problem. It is a problem not only for the occupant (and perhaps the neighborhood), but also for the rehabilitation program. Cluttered premises can make inspections and rehabilitation work more difficult and dangerous.

OHCP recommends that accumulations of rubbish and garbage be removed from the exterior premises and from the interior of the dwelling prior to rehabilitation.

If the owner has the ability to remove the rubbish, grantees can require the removal of the accumulated rubbish as a condition for participation in the rehabilitation program.

6.1.8 EXTERMINATION OF VERMIN AND INSECTS

Standard: The premises **shall** be free from infestations of vermin and/or wood-boring insects. Inspections **shall** be performed on each existing house by qualified inspection and extermination contractors (or rehabilitation specialists trained and experienced in conducting wood boring insect infestation inspections), prior to rehabilitation. If there is evidence of an infestation, professional treatment **shall** be performed. Also, an analysis **shall** be done on the environmental factors that may be contributing to the infestation, and, as necessary, action **shall** be taken to mitigate these contributing factors. After extermination, proper precautions **should** be taken to prevent re-infestation. The owner **shall** be advised to continue services to prevent re-infestation.

Commentary: Untreated infestations can have serious long term adverse affects on the rehabilitation investment in the home. Not only is the habitability of the home threatened, but, as is the case with wood-boring insects such as termites, the structural integrity of the home can also be at risk.

Examples of environmental factors that can contribute to infestation of vermin are accumulations of rubbish, unsanitary conditions, the presence of moisture, untreated wood in close proximity or in contact with soil, etc.

6.1.9 TREES, SHRUBS, AND LANDSCAPING

6.1.9.1

Standard: **Tree and shrub removal:** The premises **shall** be free from trees and shrubs that are damaging the dwelling, or present an on-site hazard. Tree limbs which are in danger of falling on roof areas **should** be removed.

Commentary: Trees or shrubs that are growing up against the dwelling or its foundation can cause considerable damage. Roots can split and crack foundation materials and infiltrate water and sewer lines. Branches can wear on siding, roofing and gutter materials. Shrubs up against a house can cause undue dampness and mold, which can cause deterioration of the structure and/or health hazards.

When damage is evident, the cause needs to be removed. This may mean simply removing the part of the tree or shrub that is contacting the home or, in more severe instances, removing the tree or shrub altogether.

When the potential for damage exists, such as when a large dead tree branch is leaning near or overhanging the home, grantees must remove the potential hazard.

6.1.9.2

Standard: **Finish grade, seeding, and landscaping:** When a new house is built, a fine finish grading **shall** be done around the house and across the yard. The yard **shall** be seeded or sodded with appropriate grass and/or ground cover. Appropriate and simple landscaping **should** be done. When an addition is built, new underground utility lines run, grade changes made, or the soil is otherwise disturbed, proper compaction and a fine finish grading **shall** be done, and the surface **shall** be seeded, mulched, and/or planted to match, as closely as feasible, the existing surrounding yard.

Commentary: The spending of an inordinate amount of funds for this purpose is not an appropriate fit with the intentions of affordable housing. However, When building a new house and establishing a new yard, it is recommended to give thought to the short and long term impact of the way that the surface of the yard is left, and of the choices of any landscaping and plantings on the occupants and the neighborhood. For example, yards left without proper grass or groundcover will be unsightly and lead to soil erosion, unsanitary conditions for the occupants and poor play areas for any children. The type of turf selected will have an impact on the water bill, and maintenance and watering requirements are worth consideration. The planting of a few simple, well placed shrubs and trees can add long term value to a house, will improve the appearance of the neighborhood, and can decrease cooling costs and/or be an effective wind break. The proper placement and selection of tree species that have deep, non-invasive root systems and strong limbs will help to avoid future problems such as clogged sewer lines and damage to the house from falling branches.

6.2 LIGHTING, VENTILATION, AND OCCUPANCY LIMITATIONS

6.2.1 ARTIFICIAL LIGHTING (ELECTRIC LIGHTING)

Standard: All habitable rooms (i.e. rooms for living, sleeping, eating or cooking), all occupiable spaces (including; bathrooms, toilet rooms, stairways, hallways, storage and utility rooms, and spaces containing appliances or equipment requiring safe operation and maintenance), and all exterior entrances **shall** be provided with electric light. Illumination **shall** be appropriate to the purpose of the room and sufficient to meet the needs of the occupant. All exterior entries **shall** be provided with an exterior light fixture that effectively illuminates the exterior entrance. Interior and exterior stairway lighting **shall** be in conformance with the *RCO 303.6*.

Commentary: Although many rooms have windows, natural light is not sufficient by itself. In order to provide sufficient light for routine household tasks and for safe movement within the home, OHCP is requiring electric light sources in all spaces that are routinely used by the occupant and that contain equipment that must be maintained. This includes storage rooms and spaces such as basements, crawlspaces and attics that contain furnaces, water heaters and other equipment. For specific electrical wiring and fixture requirements, see *RRS Sections 4.8*.

The placement of light fixtures and the amount of light each fixture provides is important. However, except for interior and exterior stairways, OHCP has not set specific illumination standards. Instead, the light source needs to be located so that it can provide enough illumination so that the occupant can perform tasks and move about safely. In areas where illumination is required for long periods of time, such as hallways and stairways, OHCP recommends installing energy efficient hard-wired fixtures and lamps (e.g. compact fluorescent type lighting). For exterior installations such as security and porch lights, OHCP recommends energy efficient lamps and photo-electrically controlled fixtures.

6.2.2 VENTILATION

Standard: For all habitable rooms, natural ventilation **shall** be provided through windows, doors, or louvers. Such openings **shall** be provided with ready access or **shall** otherwise be readily controllable by the building occupants. All newly constructed houses and room additions **shall** meet the requirements of the *RCO, Section 303*.

Exceptions: An alternative method for ventilating the dwelling is through the use of a mechanical, whole house ventilation system. If this is to be the primary source of ventilation air, or to take the place of the required natural ventilation described above, then the system **shall** be adequate to produce 0.35 air changes per hour, **should** provide for both intake and exhaust air, all intake air **should** be filtered, and the intake air **should** be distributed in appropriate quantities to each habitable area through a system of ducts. See the *RCO, Section 303*.

In some houses that achieve adequate ventilation air through natural means as described above, there may be value in having a mechanical ventilation system. For example, some occupants may have severe allergies or other health problems that would necessitate such a system. Also, very tightly sealed houses with little air infiltration can benefit from the addition of a mechanical ventilation system. In these cases, a mechanical ventilation system **should** be installed. There are a number of different types of systems. Some systems provide only intake air. Some systems provide only exhaust air. As described above, some systems provide for both intake and exhaust air. When selecting a ventilation system for the specific purposes described above, thought **should** be given to the specific needs of the occupants, the specific characteristics of the house, and to the financial outlay that will be required for each of the various systems.

For specific rooms where inadequate ventilation through windows is not possible, such as the case of interior rooms with no outside walls, the need for ventilation air can be met in one of two ways. In these cases, either a mechanical ventilation system capable of producing 0.35 air changes per hour **shall** be installed, or the ventilation needs **shall** be met through natural means, as described above. If the adjoining room is to be used as a means for ventilation air, an unclosable doorway or other opening of at least 16 square feet **shall** be present between the two rooms.

Commentary: As outlined in RCO Section R303, adequate and controlled movement of air between habitable rooms and the outside is important in order to maintain a healthy environment. In most cases, this can be achieved naturally through opening windows in rooms where people spend the majority of their time. However, in kitchens and bathrooms, where cooking and bathing create excessive amounts of moisture, 6-4 mechanical ventilation (i.e. a ducted power vent fan) may be a necessary alternative. All bathrooms must be provided with a mechanical means of ventilation.

For specific standards on windows, see *RRS Section 2.4*. For specific standards on mechanical ventilation devices, see *RRS Section 2.6.4*. Additional guidance is provided in *RCO; Section M1506* which sets minimum required exhaust rates for one and two family dwellings.

6.2.3 OCCUPANCY LIMITATIONS

Standard: Where feasible, occupancy limitations **should** conform to *the International Property Maintenance Code (IPMC), Section 404*. In the case where a new room, such as a bedroom or bathroom is constructed, it **shall** be constructed and attached to the dwelling to conform to the minimum room areas outlined in the ORC, Section 304.

Commentary: *Section 404 of the IPMC* establishes criteria for privacy, access from sleeping rooms, overcrowding, minimum ceiling heights and minimum room widths. These criteria should help ensure a reasonably healthy and comfortable environment. However, OHCP recognizes that, in some instances, the criteria will not be able to be met without extensive and expensive alterations.

For example, constructing a hallway and a doorway to meet the IPMC requirement for separate bedroom entrances may not be possible because of the way the house is laid out, the cost, or because the owner objects to the alteration. Based on how the space in questions is actually used by the occupants and the estimated cost of the alterations needed to strictly meet the IPMC standards, grantees may liberally interpret those occupancy standards.

It is not OHCP's intention to require grantees to strictly follow the criteria outlined in the IPMC Section 404 when to do so would result in an unreasonable expansion or reduction of rehabilitation work. For example, if a habitable room is used as a bedroom, but is somewhat smaller than that allowed by the BOCA NPMC, OHCP expects grantees to treat the space as a bedroom and not enlarge the space in order to classify it as a bedroom or conversely, deny that it is bedroom and treat it as some other kind of space.

6.3 HABITABLE SPACES

6.3.1 BEDROOMS

Standard: Each dwelling unit **shall** have the number of bedrooms (i.e. sleeping rooms) sufficient to provide the occupants with privacy. Bedrooms **should** be arranged so that persons do not have to pass through one bedroom to enter another bedroom or another habitable space. Kitchens, space that is not habitable, and basements that exhibit signs of moisture **shall not** be used as bedrooms. Each bedroom or sleeping area **shall** have a means of emergency egress as required in the *RRS Section 6.6.1*.

Commentary: Private and safe sleeping rooms are important for the physical health and psychological well being of the occupants. Therefore, bedrooms must be located in safe habitable areas and there must be enough bedrooms with separate entrances to provide adequate privacy to the occupants. Safety and comfort are critical concerns where bedrooms are located below grade or in a basement. Therefore, each below grade or basement bedroom must meet the requirements of the appropriate structural, electrical and environmental sections of the RRS.

For example, the bedroom must have adequate heat, headroom and ventilation and be free from excessive moisture. If fuel burning equipment is also located in the basement, the equipment must be located and installed to conform to the RRS, Chapter 3, and combustion air requirements shall conform to the RRS, Section 3.4. Also, emergency egress must be provided as required by the RRS, Section 6.6.1. OHCP does not recommend the conversion of any fully sub grade basement space for use as a bedroom.

OHCP has not set a standard for the number of bedrooms required per number of occupants. Instead, OHCP recommends that grantees use the occupancy limitation standards in the IPMC Section 404.

6.3.2 LIVING ROOMS, DINING ROOMS AND OTHER HABITABLE SPACES

Standard: Rooms routinely used for living **shall** meet the appropriate standards outlined in the structural, electrical and environmental sections of the RRS.

Commentary: Although most dwellings have space designated for more than cooking and sleeping, OHCP has not established a standard for the number or type of habitable spaces required for each dwelling unit. In other words, OHCP is not requiring that dwellings have living rooms and dining rooms, etc.

6.4 OCCUPIABLE SPACES

6.4.1 KITCHENS

Standard: Each dwelling **shall** have a kitchen. The kitchen **shall** have a sink plumbed with hot and cold water. The kitchen **should** have adequate space for food preparation and storage, including space for a refrigerator, a range/stove/oven, an adequate number of cabinets and an adequate amount of counter top surface. Cooking equipment **shall** be safe and properly connected to the fuel supply. To be safe, gas fired cooking appliances **shall** have a proper connection to the fuel supply and a shut off valve, and **shall not** be emitting high quantities of carbon monoxide into the house. Electrical cooking appliances **shall** be properly connected to the power with an appropriate pigtail in good condition. The condition of the sink, cabinets, counter tops, floor, wall and ceiling surfaces **shall** be functional, structurally sound and able to be maintained in a sanitary manner. For specific standards on interior floor, wall and ceiling coverings, see the *RRS Section 2.3.6 and 2.3.8*. For specific standards on electrical systems, see RRS Chapter 4. For specific standards on plumbing systems, see *RRS Chapter 5*.

Commentary: Kitchen spaces must be functional and adequate for the purpose of storing food and utensils, preparing meals, and washing dishes. This means that each kitchen space must have a fully plumbed sink, enough cabinets and counter top to store items and prepare meals, space for refrigeration and space for cooking equipment. Cabinets for the storage of food and cooking utensils must be in reasonably sound condition and not exhibit conditions which promote unhealthy storage.

Cooking equipment, especially gas-fired ranges and stove tops, must be installed properly. To improve indoor air quality, OHCP recommends installing a power vent fan (ducted directly to the outside) above gas-fired ranges and stove tops. Repairing deteriorated but otherwise functional, cabinets is preferred over replacement.

OHCP has not set standards regarding the placement of appliances, the minimum number of cabinets or the minimum amount of counter top area. OHCP expects grantees to determine the adequacy of a kitchen's design and function based on the existing conditions and the characteristics of the household.

However, as a guideline, OHCP recommends the following: 40 Sq. Ft. of cabinet shelving, 10 SF of drawer space and 15 SF of counter top space per kitchen.

6.4.2 BATHROOM/TOILET ROOM

Standard: Each dwelling **shall** contain adequate and private spaces designated for bathing and for the elimination of bodily wastes. Each space designated for bathing **shall** contain a safe, functional bathtub, shower or combination bathtub/shower plumbing fixture. Each space designated for waste elimination **shall** contain a safe and functional water closet and lavatory plumbing fixture. Bathrooms/toilet rooms **shall** not be located so as to provide the only passageway to a hall, other space or to the exterior. Exterior located toilet rooms (i.e. outhouses) are unacceptable when they are the sole source for waste elimination, and **shall** be replaced with plumbing facilities located within the dwelling.

The size and number of bathrooms/toilet rooms and the configuration of the plumbing fixtures **should** be adequate to the needs of the household. Fixtures **shall** be placed and designed so that they can be used safely and be maintained in a sanitary manner. When an occupant is handicapped or disabled, the location and configuration of the bathroom/toilet room and its plumbing fixtures **should** comply with the applicable construction standards in the Uniform Federal Accessibility Standards. When an occupant is elderly and/or frail, grab bars (properly secured to reinforced wall supports), easily operable faucets (i.e. faucets that do not require tight grasping, pinching or twisting of the wrist) and plumbing fixtures designed to accommodate accessibility, **should** be installed, as appropriate. For specific standards on interior floor, wall and ceiling coverings, see the *RRS Section 2.3.6 and 2.3.8*. For specific standards on electrical systems, see RRS Chapter 4. For specific standards on plumbing systems, see *RRS Chapter 5*.

Commentary: Safe, functional and private bathing and toilet facilities are required. In most single-family dwellings, the bathroom and the toilet room are combined so that the bathing plumbing fixtures and the toilet plumbing fixtures are contained in the same room. However, where they are separate, a lavatory (for hand washing) must be located in or adjacent to the room containing the toilet. OHCP recommends the elimination of all existing outhouses in conjunction with the rehabilitation effort.

6.4.3 STORAGE AND UTILITY ROOMS

Standard: Storage and utility rooms **shall** meet the appropriate standards outlined in the structural, electrical and environmental sections of the RRS.

Commentary: Because most dwellings have adequate space designated for storage (e.g. cabinets, closets, basement, attic, etc.), OHCP has not established a standard for the amount of storage space a dwelling should contain.

However, in cases where the amount of storage space is clearly inadequate and problematic for the household, adding storage space within the existing dwelling (e.g. installing shelves, adding cabinets, constructing a closet, etc.) is acceptable rehabilitation practice.

6.5 ACCESSIBILITY

Standard: Rehabilitation measures specifically intended to improve accessibility **should** meet the construction requirements outlined in the applicable sections of the Uniform Federal Accessibility Standards. Consideration **shall** be given to the specific accessibility needs of any identified occupants, and modifications **shall** be made to the dwelling to meet those needs.

Commentary: Making a home safer and more accessible for handicapped or disabled persons is a desirable benefit of rehabilitation. However, it is not OHCP's intent to apply the Uniform Federal Accessibility Standards (UFAS) wholesale to privately owned homes undergoing rehabilitation. The UFAS applies only to federal buildings and federally funded facilities. However, OHCP has cited the UFAS for the purpose of establishing the construction standard for specific accessibility measures that may be needed in a specific dwelling. For example, if an entrance ramp is needed, UFAS Section 4.8 describes the construction standards to be followed. On newly constructed homes, OHCP recommends making them visitable by providing at least one entrance with no steps, making interior and exterior doors wide enough for a wheelchair, adding wall reinforcement in bathrooms to make the future addition of grab bars easier, etc. Even if the immediate occupants will not be disabled, they may sell the house. Even if they stay there, they may have accessibility needs that develop over time, either because of an accident or illness, or just as a part of the natural aging process.

6.6 FIRE AND CARBON MONOXIDE SAFETY

6.6.1 EMERGENCY ESCAPE AND RESCUE OPENINGS

Standard: All dwellings **shall** provide a safe, continuous, and unobstructed exit from each interior room directly to the outside. The exit path from bedrooms **shall not** pass through other dwellings or rooms within the dwelling that are capable of being locked in a way that would obstruct exit from the bedroom. Exterior doors **shall** be easily openable from the inside without the need for keys. Each bedroom or sleeping area **shall** have at least one openable emergency escape and rescue opening directly to the outside that is in compliance with the *RCO, Section 310*. When basements contain one or more sleeping rooms, emergency escape and rescue openings **shall** be required in each sleeping room, and each opening **shall** comply with the *RCO, Section 310*.

Commentary: Direct and safe egress will help ensure a quick evacuation in case of fire. Exit paths that are impassible, indirect or obstructed by doors that may be locked or difficult to open significantly lengthen the time necessary to escape. To help ensure a safe egress, it may be necessary to create or modify an existing egress.

6.6.2 GARAGE TO DWELLING DOORS

Standard: Openings from a private garage directly into a room used for sleeping purposes **shall not** be permitted. Other openings between the garage and residence **shall** be equipped with solid wood doors not less than 1 3/8" in thickness, solid or honeycomb core steel doors not less than 1 3/8" thick, or 20 minute fire rated doors. Also see the garage separation requirements in *the RRS, Section 2.3.7*.

6.6.3 SMOKE DETECTORS AND CARBON MONOXIDE DETECTORS

Standard: Smoke detectors and carbon monoxide detectors **shall** be installed in the following areas:

Smoke Detectors: a) in each sleeping room b) outside each, separate sleeping area in the immediate vicinity of the bedrooms, c) one on each additional story of the dwelling including basements but not including crawl spaces and uninhabitable attics, in compliance with the *RCO, Section 313*. In dwelling units with split levels and without an intervening door between the adjacent levels, a smoke alarm installed on the upper level shall suffice for the adjacent lower level provided that the lower level is less than one full story below the upper level.

Multiple smoke detectors installed within the dwelling unit **shall** be interconnected in such a manner that the activation of one alarm will activate all of the alarms in the individual unit. Each dwelling **shall** have smoke detection devices located and installed as required in *RRS Section 4.9*. All smoke detectors **shall** be approved and listed by a recognized independent testing laboratory and placed as directed by the manufacturer and in accordance with *NFPA 70A and NFPA 72*.

Carbon Monoxide Detectors: One carbon monoxide detector **shall** be located in the dwelling. When installed in combination with a smoke detector the unit **shall** be hard-wired and interconnected with other smoke detectors in the dwelling unit.

6.6.4 STORED FLAMMABLE MATERIALS

Standard: Flammable materials (e.g. paint, solvent fluids, paper, rags, etc.) **shall not** be stored or accumulated in an unsafe or unapproved manner while the rehabilitation is in progress.

Commentary: Safe housekeeping practices for flammable materials, particularly volatile combustible liquids are an important fire prevention strategy. If such materials are stored inside the dwelling, they must not be stored near ranges, stoves, fireplaces or fuel-fired furnaces and water heaters.

Because this standard may not be adhered to by the occupant after the rehabilitation is completed, OHCP encourages grantees to educate occupants about the hazards of improperly stored flammable materials.

6.6.5 FOAM PLASTIC, FLAME SPREAD AND SMOKE DENSITY

Standard: Foam plastic materials, wall and ceiling finish materials and insulation materials that have a flame-spread classification greater than 200 or a smoke-developed index greater than 450 **shall not** be installed during construction, rehabilitation, or repair, as outlined in the *RCO, Section 315*. Where these types of materials exist, they **should** be covered with safe materials or removed and replaced.

Commentary: This section, which cites the RCO requirements for ignition, flame spread and smoke generation of materials, applies to foam plastics, interior finishes and insulation that are very hazardous in the event of a fire.

6.7 OCCUPANT HEALTH

6.7.1 ASBESTOS

Standard: All work to remove, contain or encapsulate asbestos **shall** comply with applicable federal, state and local regulations and laws.

Commentary: While asbestos abatement is not required for privately owned rehabilitation projects containing less than four dwelling units, it is possible for rehabilitation work to disturb asbestos. For example, rehabilitation work could include replacing warm-air heating ducts or hydronic heating pipes wrapped in asbestos containing materials. When such materials are in deteriorating condition, the removal of the asbestos containing material must be done properly by a licensed asbestos contractor and in accordance with applicable regulations and law. In cases where the asbestos containing material is not to be disturbed by rehabilitation, and is not in a deteriorating condition within the living space, OHCP recommends that it be left alone.

6.7.2 INDOOR AIR QUALITY

Standard: The dwelling **shall** be free of known pollutants that exist at levels which threaten the health of the occupants.

Commentary: Any home (old or new) can have indoor air quality (IAQ) problems. Though diagnosing an IAQ problem can be difficult, the health benefits gained from correcting it can be substantial. Therefore, when an IAQ problem is suspected, the cause must be investigated so that measures designed to correct or mitigate the problem can be built into the rehabilitation scope of work. At a minimum, OHCP recommends that further actions be taken where any of the following conditions exist:

a. Where the condition, type or location of the fuel-burning equipment or the vent system can allow carbon monoxide (CO) and other combustion by-products to enter the home. Examples of such conditions include; use of unvented appliances, a cracked heat exchanger, leaks in the vent system, a plugged vent or chimney flue, back-drafting due to inadequate draft or competition between appliances located in confined spaces.

b. Where unsealed forced-air heating system return ducts pass through areas which may draw moisture, CO or other pollutants into the home.

c. Where excessive moisture, mold or mildew is present.

d. Where the lack of plumbing vents or traps allow sewer gas to enter the home.

However, some conditions are less obvious. In fact, some conditions may not become problems until after the rehabilitation is completed.

Rehabilitation can exacerbate a latent IAQ problem because the balance between the structure, the mechanical systems and the occupant's use of the home was changed. For example, a home can develop a moisture problem (and mold growth) because the amount of uncontrolled air movement has been significantly reduced, but the source of the moisture problem was not identified and corrected.

Some IAQ problems can result from the materials installed during rehabilitation. For example, new floor coverings, paint, adhesive, etc. will "out gas" volatile organic compounds (VOCs). Though the IAQ should only be temporarily affected, some occupants may suffer adverse symptoms.

Some IAQ problems can result from the occupant's behavior. For example, occupants may not use the ventilation fans when bathing or cooking, or they may have behaviors that produce high levels of air-borne pollutants (e.g. smoking, using portable kerosene heaters, etc.). OHCP recommends that grantees educate occupants about the IAQ problems their behavior may cause. In addition, to provide an early warning against CO poisoning, OHCP requires the installation of a CO detector, which must be approved by an independent laboratory, receive their primary power from the buildings electrical wiring and be installed according to the manufacturer's installation instructions.

6.7.3 WATER SUPPLY

Standard: All dwellings **shall** have adequate, safe and potable water supplied through a safe plumbing system to all fixtures. Water drawn from private sources (privately owned wells) **shall** be tested by a local health department, or other qualified source, to determine the bacterial content prior to beginning the rehabilitation work.

Commentary: A safe and adequate supply of potable water for drinking, cooking and bathing is essential to occupant health. This includes having both hot and cold water available at sufficient pressure at all sinks, lavatories, bath tubs and showers.

To ensure that a private water supply system is safe, it must be tested for bacterial contamination, preferably by a local health department, or other qualified source, to determine the bacterial content prior to beginning the rehabilitation work.

6.7.4 SANITARY DRAINAGE

Standard: All plumbing fixtures (e.g. sink, lavatory, bathtub, shower, toilet, etc.) and all other plumbing appliances (e.g. dishwasher, clothes washing machine, etc.) **shall** be properly connected to either a public sanitary drainage system or to an approved private sanitary drainage system. Private sanitary drainage systems **shall** be inspected to ensure that they are properly and adequately functioning.

Commentary: Safe disposal of household liquid and solid waste is critical to a healthy environment. A sanitary drainage system that leaks waste or sewer gas into the home or that discharges untreated waste directly into the environment is a source of disease and illness. Therefore, a close inspection of the sanitary drainage system is very important.

At a minimum, the inspection would include inspecting for leaks, improperly installed materials, improperly connected materials, improper repairs, improper venting, missing traps, missing cleanouts and improper supports. For sanitary drainage system standards, see *the RRS Section 5.4*.

6.8 HISTORIC PRESERVATION

Standard: The rehabilitation of dwellings subject to the Section 106 Review Process of 36 CFR Part 800 **shall** comply with the findings and recommendations issued by the Ohio Historic Preservation Office.

Commentary: Rehabilitating older dwellings that may have “historic” or architectural significance requires special coordination with the Ohio Historic Preservation Office (OHPO). As a result, OHPO may require the rehabilitation scope of work to preserve or protect the historic character of the structure. In such cases, OHCP expects grantees to follow the guidelines that OHPO may require. For guidance on what materials and measures are and are not recommended, see the U.S. Department of the Interior’s “Standards for Rehabilitation and Guidelines for Rehabilitating Historic Buildings” and contact the OHPO.

6.9 FLOOD PLAIN MANAGEMENT

Standard: The rehabilitation of dwellings located in a flood plain **shall** comply with applicable federal, state and local regulations and laws. The rehabilitation of dwellings located in a flood plain in jurisdictions participating in the Flood Protection Management System **shall** comply with the applicable Federal Emergency Management Agency regulations.

Commentary: The proximity of a dwelling to rivers and streams that are known to periodically flood can have a significant impact on the extent and the type of rehabilitation work that can be done. Therefore, grantees must determine if a dwelling is at risk and follow the appropriate guidelines. The flood plain management guidelines may, on the one hand, limit the type of work which may be done and, on the other hand, specify certain flood proofing items which must be done.

Rehabilitating dwellings in jurisdictions participating in the Flood Protection Management System requires using special materials and methods not normally employed in areas not prone to flooding. Adherence to the additional construction standards is important to protect the dwelling against flood damage and to maintain the community's eligibility to participate in the National Flood Insurance Program.

Examples of special construction standards include; anchoring structures to prevent movement, raising utility services and mechanical system equipment above flood levels, protecting water and sewer systems against contamination and using water impermeable materials when possible.

Where flood proofing an existing home is not economically or physical possible, consideration ought to be given to alternative housing assistance such as relocating the household to an appropriate site or constructing a new approved structure on the site.

For information regarding flood plain management requirements, OHCP recommends contacting the Ohio Department of Natural Resources, Division of Water and FEMA.

CHAPTER SEVEN

THE ELIMINATION OF LEAD-BASED PAINT HAZARDS

GENERAL REQUIREMENTS

Lead-based paint (LBP) renovation work is necessary to address an important health and safety issue. Lead based paint hazards and work pose a real health and safety risk to all occupants and need to be taken seriously in all houses. The safety of children under the age of six, pregnant women and women of child bearing years are the most important people to protect from lead based paint exposure. It is important to look at the big picture. The occupants may be an older couple, but have the grandchildren who visit frequently, thus exposing a child under six to lead hazards. To be effective, LBP work must accomplish the following:

- Identify all possible lead hazards;
- Identify the household & family characteristics;
- Provide qualified contractors to perform work;
- Provide adequate monitoring of work;
- Ensure that all identified lead-based paint hazards are eliminated and that the house is physically clear of lead dust above the allowable amounts.

It is up to the risk assessor to identify the lead hazards and family characteristics, and to develop a scope of work for dealing with the hazards, in conjunction with the rehabilitation specialist, who may be detailing the scope of other work to be done at the house. A plan must also be put in place for the scheduling of the work, including any necessary relocation. For abatement projects, a 10 day notice will be required by the Ohio Department of Health, which can also affect scheduling. This is important work and will help to ensure the safety of the occupants.

The program will need to ensure that qualified contractors will complete the work, and that they will be provided with adequate oversight to ensure that the work is done adequately and in a safe manner for both the workers and the occupants. Work not done properly or checked carefully could leave the house less safe than when the work started.

The Clearance examination is probably the most important item on the list, because it ensures that everybody did his or her job correctly and completely. When the house passes clearance, the identified lead-based paint hazards and dust should no longer be a danger to any occupant in the house.

7.1 GENERAL CONDITIONS

Standard: All lead based paint hazard reduction work **shall** be completed in accordance with HUD's Title X, 24 CFR part 35; House Bill 248; the Ohio Department of Health's (ODH) Regulations, and the provisions of this chapter.

Commentary: All projects completed through the Community Housing Improvement Program (CHIP) are required to comply with the federal and State requirements as outlined above. It is not the intention of this chapter to reiterate the existing lead regulations, but to cover areas no longer covered through the inter agency agreement, and to provide additional requirements and clarification.

7.2 PROGRAM PERSONNEL REQUIREMENTS

7.2.1 QUALIFICATIONS FOR THOSE CONDUCTING RISK ASSESSMENTS

Standard: Identification of lead based paint hazards **shall** be completed by a State of Ohio licensed Risk Assessor.

Commentary: Each program can make the decision, based on their own staff capacity and qualifications, whether they will have a risk assessment done by staff or whether they will contract with a separate organization for risk assessment services. If the rehabilitation specialist has a State of Ohio Risk Assessor's license, then (s) he can act as the risk assessor.

7.2.2 QUALIFICATIONS FOR THOSE CONDUCTING CLEARANCES

Standard: Clearances **shall** be completed by a State of Ohio licensed Risk Assessor, licensed Clearance Technician or Paint Inspector for any Remodeling and Renovator/Lead Safe Renovator work. Clearances **shall** be completed by a State of Ohio licensed Risk Assessor or Paint Inspector for any abatement projects.

Commentary: Each program will have to decide who is going to do the clearance testing and what credentials they will have for the projects they undertake. Most jobs could run the risk of being an abatement job as easily as a lead-safe renovation job. These require different staff qualifications. A risk assessor on staff has the advantage of being able to schedule clearances quickly in comparison to a third party environmental firm with other clients. However, the third party environmental firm may have an advantage because they are not dealing with the contractor on a daily basis, and may be seen as an objective third party.

7.2.3 QUALIFICATIONS FOR THOSE WRITING SPECIFICATIONS

Standard: Specifications for all rehabilitation work **shall** be written by a licensed Risk Assessor, or a licensed lead abatement contractor or supervisor, or a Rehabilitation Specialist with one of these licenses or a lead-safe Remodeler's and Renovator's certificate. Specifications **shall** be written by a State of Ohio Licensed lead abatement contractor or supervisor for all lead abatement work.

Commentary: The process is different for lead safe renovation work and lead abatement work. Thus a determination of who is allowed to specify the work is different. Lead safe renovation work's original purpose is renovation work, not lead abatement. The rehabilitation specialist or risk assessor who knows the house and the original intent of the work is the best person to write the specifications. Abatement work is still governed by the Ohio Department of Health and they require a State licensed individual to develop the abatement specifications.

7.3 PROCEDURAL PROTOCOL

7.3.1 RISK ASSESSMENTS

7.3.1.1

Standard: Presumption **shall** only be allowed in projects under $5,000 where all painted surfaces to be addressed **shall** be treated as though they contain lead-based paint. Presumption **shall not** be allowed in any other circumstance.

Commentary: Presumption can often lead to unnecessary costs by assuming lead hazards. With a tight budget, unnecessary costs should be avoided. The costs associated with properly addressing all friction and impact surfaces, bare soils, etc. on a rehabilitation project, when those surfaces may or may not be a hazard, can easily lead to wasted resources.

7.3.1.2

Standard: With the exception of the more stringent standard above (7.3.1.1), the requirement for when a risk assessment is required **shall** follow HUD's 24 CFR part 35.

Commentary: HUD spells out quite clearly when and where lead risk assessments are required. The risk assessor may wish to take stronger precautions when a child under six or a pregnant woman lives at the unit. The risk assessor may want to take extra XRF readings on friction, impact, chewed, deteriorated and/or peeling paint surfaces to show all existing lead hazard levels were below allowable limits.

7.3.1.3

Standard: The risk assessment **shall** identify lead based paint hazards on the entire site including, but not limited to detached garages, fences and play areas.

Commentary: Lead based paint hazards can be located throughout the property and hazard control work should not be limited to just the residential unit. Treating only the house would defeat the purpose, if the real problem was somewhere else on the site and never addressed. The degree that lead is a hazard in out buildings, fences, etc. will depend largely on the amount of contact that children will have with these structures, which is why understanding the characteristics and dynamics of a household and their living patterns is important in assessing the degree that a particular structure or area is a hazard.

7.3.2 CLEARANCES

7.3.2.1

Standard: The requirement for when a clearance and where wipes are done **shall** follow the State of Ohio Department of Health rule 3701-32.

Commentary: Dust wipe locations are clearly defined by the State of Ohio Department of Health. When a child under six or a woman who is pregnant lives in the unit, a stricter protocol may be enacted by the program and may include the following locations for wipes: outside of all exterior entrances, the basement floor and the garage floor. A thorough cleaning of the house using techniques outlined in the HUD guidelines will be required to prepare for clearance. Some contractors hire firms that specialize in environmental cleaning for this purpose.

Clearance protocol is also defined in HUD's *Guidelines for the Evaluation of Lead Based Paint Hazards in Housing.* All trainings have used this protocol for assessments, inspections, and clearances.

7.3.2.2

Standard: The dust wipe and soil sampling procedures, and allowable clearance levels for dust wipes and soil samples **shall** follow the Ohio Department of Health's most current rule (currently, the allowable levels listed below):

Allowable wipe levels shall be below the following:

Floors	40 ug/ft^2
Window Sills	250ug/ft^2
Window Wells/Troughs	400ug/ft^2

Allowable soil levels shall be below the following:

Bare Soil Play Areas	400 ppm
Non-play areas	1,200 ppm

Commentary: These are the current levels for soil and dust wipe samples. It will be up to the program and risk assessor to keep up with the most current levels issued by the Ohio department of Health.

7.3.3 RELOCATION

7.3.3.1

Standard: The Contractor **shall** submit an occupant protection plan, which includes a relocation plan if required in 24 CFR 35.1345. The occupant protection plan **shall** minimally include the elements outlined in *Appendix 7 - B* and **shall** be approved by the risk assessor (as required in 7.3.1.2) and the rehabilitation specialist, and acknowledged by the homeowner before any work is performed. Documentation **shall** be included in the file. A policy **should** be developed so that persons who have insufficient income to pay for relocation expenses, and do not have relatives or close friends in the area, are not precluded from receiving assistance.

Commentary: Every unit has different household and lead based paint circumstances. Will the lead based paint work involve the whole house or a limited area? What are the ages of the occupant(s)? How long will the lead work take? Will the program provide any assistance to owner-occupied properties for temporary relocation while the rehabilitation and hazard mitigation work is progressing? It will have to be decided on a unit-by-unit basis what will work for relocation. Because the housing rehabilitation program is voluntary, the program can require that homeowners with sufficient resources or with willing family or close friends in the area that have adequate accommodations, to be responsible for finding alternative accommodations during the rehabilitation and lead hazard mitigation work.

7.3.3.2

Standard: Due to the health risks involved and the contractor's liability, where potential hazards still exist, residents **shall not** be allowed to enter the work site.

Commentary: Lead-based paint hazard reduction work can leave a fine dust that is invisible to the naked eye, and therefore it is important that clearance is achieved prior to the household re-occupying the structure following this work. A number of precautions can be taken to help to ensure that residents do not reenter the property prior to clearance. For example, the locks on the doors could be changed during the time that the work is in progress.

7.3.4 CHANGE ORDERS

Standard: Change orders that in any way affect lead safe renovation work **shall not** eliminate the lead hazard reduction work. Specifications **should** be rewritten to accommodate for the change in the scope of work.

Commentary: Although change orders should generally not entail any new procedures, an item that is added or deleted from a specification that involves a painted surface needs to be considered more carefully. For example, if a window was initially going to be replaced, and later during the project it was decided to delete that particular item, normally the item and the specification would be deleted. In a project involving lead hazard reduction work, instead the window likely would need to have a specification written to have interim controls applied to any friction surfaces or deteriorated paint.

HUD and OHCP recognize that unanticipated change orders are common in rehabilitation projects. Therefore, a recalculation of the level of assistance will not be required for the purposes of the lead-based paint regulation, and thus will not require a change in the category of lead-based paint requirements, as a result of a change order; except that if a pattern is found that indicates an obvious abuse of this policy to avoid more protective requirements, the Department will find the designated party in noncompliance.

7.4 SPECIFICATIONS

7.4.1 REHABILITATION COSTS DETERMINE LEAD SPECIFICATIONS

Standard: As per HUD's 24 CFR part 35, the rehabilitation costs **shall** determine whether the project is an Abatement project or if Interim Controls may be performed. See below for a brief outline:

a) **$0 - $5000**: Repair disturbed paint surfaces and clear the worksite(s), not entire unit. (if paint testing shows no lead present then neither safe work practices nor clearance is required). The worksite must be isolated from other areas of dwelling!

b) **$5,001 – $25,000**: Perform interim controls on identified or presumed hazards and any lead-based paint hazards created by rehabilitation work. Clean and Clear unit.

c) **$25,001 and greater**: Perform abatement on identified hazards and any lead-based paint hazards created by rehabilitation work, except that interim controls can be used on exterior surfaces. Clean and Clear unit.

Commentary: This is a brief outline of the process and the HUD guideline should be referenced for a full explanation. To help make this determination, it is important to understand a few key concepts listed below:

- HUD regulations allow the cost of lead hazard control work and related costs to be deducted from the project cost in order to adjust (lower) the figure to be used in determining which of the above categories (a ,b or c above) applies. A worksheet is provided for this computation in A*ppendix 7 – A*.

- "Interim Controls" are temporary methods to control lead-based paint hazards in place. "Abatement" is permanently controlling lead hazards.

- Three factors can make a project an abatement project:

  1. If the hard cost calculation exceeds the $25,000 per unit cost figure (per HUD regulations).

  2. If the intent of the activity is to *permanently* control lead hazards.

  3. If the housing unit is occupied by a child under 6 years of age with an EBL.

- Rehabilitation that involves the removal of components does not automatically make them "abatement". HUD and EPA issued a joint memo on this issue, which indicates that **intent** is the key issue. If the intent of the work is to make a unit permanently free of lead hazards, such as window replacement, then it becomes abatement. If the intent of the activity is rehabilitation, then such window replacement would just be a rehabilitation cost (though it still would need to be done in a lead-safe manner).

- The worksheet in *Appendix 7 - A* effectively accomplishes both determining the HUD rehabilitation cost amount and the intent of the activity. Using the window replacement example, if this cost were classified as a rehab cost, it would be consistent with rehabilitation, if it were classified as a lead reduction cost, then it would indicate an abatement project (remember window replacement is not an interim control). Note that removal or replacement of a component should never need to fall into the "lead hazard control" category in a housing rehabilitation program. The reason is that the rehab specialist will have determined that either the window is in such poor condition that it needs to be replaced (thus a rehab item) or it is structurally sound, so that interim controls can be applied (a rehabilitation lead-safe renovation item). In this way the worksheet becomes both a means of computation of the HUD rehabilitation as well as verification that the intent of the activity was rehabilitation, not lead hazard control.

7.4.2 NON-TESTED SURFACES

Standard: The written specifications for homes identified with lead-based paint **should** address the treatment of hard to clean and porous surfaces that have not been identified as containing high dust levels. Treatment could include painting or sealing of the surface as a standard practice.

Commentary: Treatment of the surface during the work process may help eliminate required retests on hard to clean surfaces and allow the job to be finished more quickly and without extra costs to the contractor.

7.4.3 DE-MINIMIS LEVELS

7.4.3.1

Standard: The following de-minimis levels **should** be used to determine whether the work on that surface is going to disturb an excess amount of lead based paint and require working lead safe:

- 2 square feet per interior room, or;
- 20 square feet on all exterior surfaces.

7.4.3.2

Standard: The program **should** indicate in the work specifications where the de-minimis exemption would apply, and to caution that efforts **should** be made to minimize dust generation.

7.5 QUALIFICATIONS OF CONTRACTORS AND EMPLOYEES

7.5.1 QUALIFICATIONS OF CONTRACTORS

Standard: All contractors, specialty trade contractors, and subcontractors that will be involved in the routine performance of lead-based paint interim control work or who will be responsible for work involving the routine disturbance of lead-based paint surfaces **shall** take the Lead Safe Remodeler's and Renovator's Training Program or become a licensed lead abatement contractor prior to conducting any work, and all work shall be done in a lead-safe manner. All specialty trade contractors or subcontractors not routinely disturbing lead-based paint and not exceeding de-minimis levels of hazard control **shall** conduct all lead-based paint related work as follows:

- If they have a lead safe renovator's and remodeler's certificate or a lead abatement contractor's license, they **shall** perform the work in a lead safe manner.

- If they do not have a lead safe renovator's and remodeler's certificate or a lead abatement contractor's license, they **shall** have a contractor who has a certificate or license (or the certified or licensed employee of this contractor) perform the work to the lead painted surface that will be disturbed, or the subcontractor **shall** perform the work under the direct on-site supervision of a contractor who has the above certificate or license.

- The general contractor **shall** ensure that all lead hazard control work is done by qualified individuals, as outlined in the standard above and in 7.5.2, and that all work is done in a lead safe manner.

Commentary: With new sub contractors being used to complete projects in a timely manner, a one-day class may not be readily available. The intention is not to eliminate a subcontractor because they cannot attend the class. It should not pose a problem for a subcontractor to coordinate with the general contractor to perform some minor demolition or disturb the painted surface and allow the subcontractor to proceed with his work till he can take the one-day class.

7.5.2 QUALIFICATIONS OF EMPLOYEES

Standard: All employees of contractors, specialty trade contractors, and subcontractors, that will be routinely performing lead-based paint interim control work or disturbing lead-based paint surfaces **shall,** at a minimum, complete a one-day lead safe renovators and remodeler's training within six months of hire. Until they have completed the training, they **shall** work under the direct supervision of trained persons on site. All employees performing lead based paint abatement work **shall** be either a State of Ohio licensed worker or supervisor.

Commentary: HUD regulations require that persons performing interim controls have successfully completed the Remodeler's and Renovator's/Lead Safe Renovator's Training Program, or be supervised by someone who has completed that training. However, a trained person must be on site at all times in order to provide supervision of persons who are not trained.

The lack of qualified staff on-site has raised concerns, particularly if contractors are working on more than one project, or if the trained person is not working on a particular day. There are also liability and worker safety concerns regarding the long term exposure of untrained persons to potential lead-based paint hazards. The program is therefore adopting a policy of requiring that all persons that will be performing lead based paint housing rehabilitation activities on units built before 1978 be required to have successfully completed the Remodeler's and Renovator's Training Program, as described in the standard above.

7.6 DOCUMENTATION

7.6.1 REQUIRED DOCUMENTATION IN THE FIELD

Standard: All contractors **shall** have a copy of the following items on site for review by a program representative during any lead based paint work:

- lead certificates for all employees
- The work plan for the specific job

Commentary: Maintaining a simple folder with these required forms is not difficult and will be useful by allowing whoever stops at the site to verify that the workers are qualified to do the work and that they have a plan to do the lead-based paint hazard control/abatement work.

7.6.2 REQUIRED DOCUMENTATION IN THE FILE

7.6.2.1

Standard: The contractor **shall** provide the program with a two-day notice prior to beginning any lead interim control jobs. The contractor **shall** provide the Ohio Department of Health and the program with a ten-day notice prior to beginning all lead abatement jobs.

Commentary: The form previously used by the Ohio Department of Health may be used as a template. The two day notice will help to ensure that the contractor keeps to a schedule and keeps the program involved.

7.6.2.2

Standard: The risk assessor/rehabilitation specialist **shall** visit the site a minimum of one time when the lead-based paint hazard control work is in progress and document the visit with an interim lead inspection report (*see Appendix 7 - A*), which **shall** be included in the client file. The actual number of visits required **shall** be determined by a risk analysis form (*see Appendix 7 - A*) that **shall** also be included in the client file.

Commentary: The risk assessor/rehabilitation specialist needs to keep track of the project and must not neglect the importance of being on site during lead-based paint hazard control work. These forms will keep the record process simple and straightforward for monitoring purposes.

7.6.3 POST GRANT REQUIREMENTS ON LEAD WORK

Standard: The administering agency for the local program **shall** provide the homeowner with written guidelines and general maintenance requirements for all Interim Control Work performed on the unit. Documentation that the homeowner received this information **shall** be provided in the client file. It **shall** be documented that they understand that the maintenance of this work is their responsibility.

Appendix 1 – A

Justification for the Elimination of a Specific Standard

As described in the exception under 1.2.3, if the completion of all work required on a unit to meet the shall's will result in a unit exceeding the program limits for rehabilitation, then specific standards in this document may be eliminated from the scope of work or alternative approaches used to bring the rehabilitation within the program limits. When this exception is used, the following requirements **shall** be met:

A. One copy of this form **shall** be completed and included in the client file for each specific standard that has been eliminated.

B. Work that is optional (**shoulds** rather than **shalls**) **shall not** be completed if there is inadequate funding to complete all of the **shalls**.

What is the communities funding limit for this project?	
What was the original cost estimate for this project? (must be more than the funding limit listed above)	
What is the specific RRS citation for the standard that will not be met on this project? (Only one standard per form)	
Describe the scope of work that is being deleted from the specifications.	
Explain the justification for selecting this standard to delete from the scope of work for this project?	

Explain why the elimination of this standard will not create a critical health and safety issue for this household.
Explain why the elimination of this standard will not lead to deterioration of the housing structure.
Describe any alternative approaches or measures are you taking to address any issues raised by the elimination of this standard?
Any other comments?

Signature of person completing this form: _____ Date: _____

Other options are to request a waiver of the limits of assistance from OHCP for this project, or to walk-away from the project (some projects are not an efficient use of public funds).

Additional pages can be added if any further information is needed.

Appendix 2 – A

Energy Audits

Energy Audits initially became popular in response to the energy crisis 1973 and later years. Interest in energy audits has increased as a result of growing understanding of the human impact upon global warming and climate change. An energy audit is a process, rather than a single event that includes the inspections by qualified personnel and remedies performed by general contractors. Energy audits are completed to identify and prioritize energy conversation measures that are practical and cost effective.

The specific purpose of an energy audit is to:

Estimate labor and material costs for energy measures identified

Project the savings expected from installation of energy conservation measures

Identify major energy using devices in the household

Identify and recommend appropriate energy conservation, operation, and maintenance procedures.

Identify current and potential health and safety problems and how they may be affected by measures identified in the audit.

Identify lifestyle changes that reduce energy consumption.

Identify behavioral changes that could reduce energy consumption.

Educate the residents how the can use energy more efficiently.

Provide a written record of decision making.

Energy conservation measures performed should:

Conserve energy and save money.

Increase comfort.

Enhance the health and safety of the building occupants.

A simplified approach called the UA delta-T method (http://160.36.48.42/546c/LECTURES/HEAT%20FLOW/HeatLossLect.html) can be used for approximate results. The audit may also assess the efficiency, physical condition, and programming of mechanical systems such as heating, ventilation, air conditioning equipment, and thermostat.

Factors that should be considered while performing an audit include:

Past and present energy use of the household.

Various characteristics of the building envelope including walls, ceilings, floors, doors, windows, and skylights.

The surface area and R-value of each of the building characteristics listed above.

The leakage rate, or infiltration of air, through the building envelope.

Age, condition, and steady state efficiency of appliances.

Client behavior and lifestyle.

Age and condition of the dwelling, along with surrounding climate.

Existing health and safety problems such as moisture, mold, mildew, and lead based paint.

Cost effectiveness of measures to be performed.

Appendix 2 – B

CALCULATIONS FOR DETERMINING SEASONAL HEAT LOSS AND PAYBACK

This appendix is intended to provide a mechanism for determining the cost-effectiveness of installing insulation in cases when there is doubt. In most cases, insulation is cost-effective and the RRS has set standards for attic, wall and floor R-values. However, there may be instances when the cost-effectiveness of adding insulation is not clear. For example, there may be a question whether adding more insulation to an already insulated space is economically worthwhile. Or, the same doubt may exist when any one of a number of factors exist, such as: low fuel cost, high installation cost, small area, etc.

Several things must be known before the calculation can be completed:

1, The R-value (measurement of heat flow resistance) of the materials in the area in question;

2. The U-value (measurement of heat flow) of the materials in the area in question. U-value is the reciprocal of R-value and represents the number of BTUs/hr./sq. ft. flowing through the material;

3. The Heating Degree Days (HDD) for the locality. HDDs represent the number days the outdoor temperature is below 65 F times the number of degrees difference between 65 F and the actual outdoor temperature. HDDs are generally averaged over 30 years and are available for large cities. For Ohio, Cincinnati has approximately 4,410 HDDs, Columbus approximately 5,660 HDDs, Cleveland approximately 6,351 HDDs, Akron approximately 6,037 HDDs, Dayton approximately 5,622 HDDs, Mansfield approximately 6,403 HDDs, Toledo approximately 6,491 HDDs and Youngstown approximately 6,417 HDDs;

4. The size (square foot area) of the area in question; and

5. The cost of the fuel per unit (dollars per gal, cents per therm, cents per kWh, etc.)

STEP 1: Calculating Seasonal Heat Loss Without Insulation

Complete the following formula:

$$U \times A \times T \times 24 = Q$$

Where: U = the U-value of the building materials (Btus/hr/sq.ft.)
A = the surface area of the building materials (sq.ft.)
T = HDDs
24 = the number of hours in one day
Q = the total annual amount of heat loss (Million Btus or therms)

STEP 2: Calculating Seasonal Heat Loss With Insulation

Repeat the formula in Step 1 using the U-value that would exist assuming the building component is insulated.

STEP 3: Calculating Energy Savings and Dollar Savings

a. Subtract the amount of annual heat loss calculated after insulation (the result of Step 2) from the amount of annual heat loss calculated before insulation (result of Step 1). The result is the amount of energy that will be saved each year (Million Btus or therms).

b. Multiply the amount of energy saved by its cost. The result is the amount of money that will be saved each year.

STEP 4: Calculating Payback and Annual Return

a. Multiply the cost to install one square foot of insulation by the total number of square feet of area to be insulated. The result is the total cost of the insulation work.

b. Divide the amount of money saved (the result of Step 3, b) into the total cost of the insulation work (the result of Step 4, a). The result is the number of years it will take for the annual savings achieved by the insulation to off-set the additional cost to install it. After that time, the savings will accrue to the owner.

c. For the annual rate of return, divide the cost of the insulation work by the money saved.

Appendix 3 – A

Combustion Testing Procedures

To ensure safe and efficient burner operation, all residential, commercial and industrial space and process heating equipment must be properly tested for:

- Carbon monoxide
- Smoke (Fuel oil only)
- Excess air
- Stack temperature
- Draft

Oxygen, Carbon Monoxide and Stack Temperature

The measurement for gases and temperature should be taken at the same point. Typically, this is done by selecting a sample location 'upstream' from the draft diverter/hood, barometric control or any other opening, which allows room air to enter and dilute flue gases in the stack. In larger installations it may also be necessary to extract a number of samples from inside the flue to determine the area of greatest flue gas concentration. Another common practice is to take the flue gas sample from the 'Hot Spot' or the area with the highest temperature.

Make sure that the sample point is before any draft diverter/hood or barometric damper so that the flue gasses are not diluted and the stack temperature has not been decreased by surrounding air used to balance the draft.

The sample point should also be as close to the breach area as possible, again, to obtain an accurate stack temperature. This may also provide a more accurate O_2 reading should air be entering the flue gas stream through joints in sheet metal vent connectors.

When testing **atmospheric, forced air heating equipment** with a clamshell or sectional heat exchanger design, test each of the exhaust ports at the top of the heat exchanger. The probe should be inserted back into each of the exhaust ports to obtain a flue gas sample, before any dilution air is mixed in.

Draft tests should be taken from a hole drilled in the stack downstream from the draft hood.

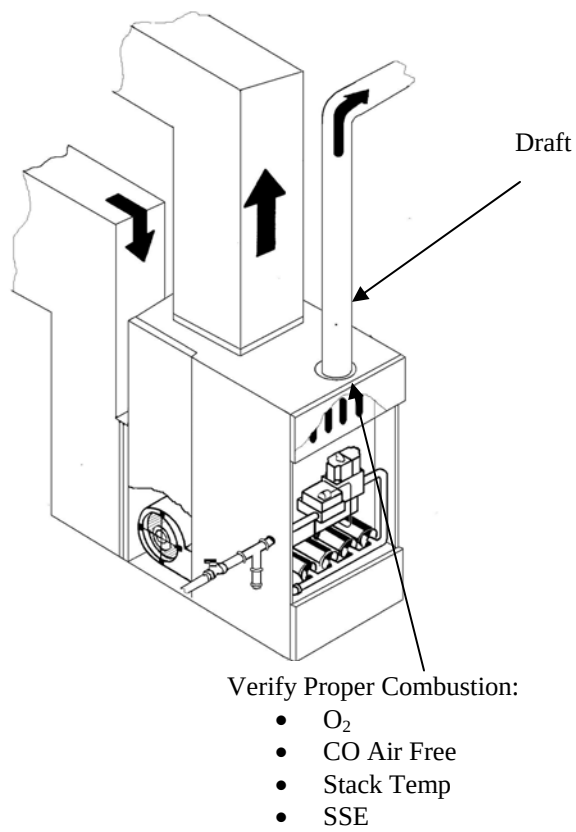

Combustion and draft testing fan assist, furnaces/boilers should be done through a hole drilled in the vent immediately above the inducer fan.

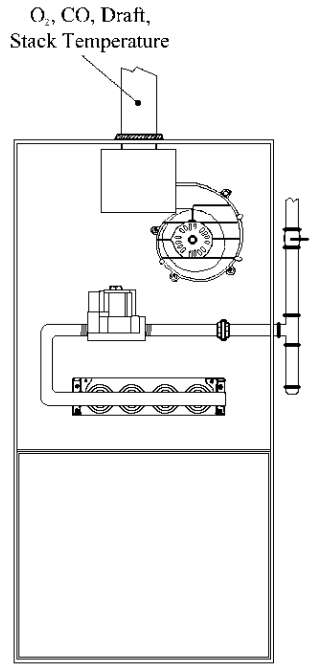

80% Fan Assist Furnace/Boiler

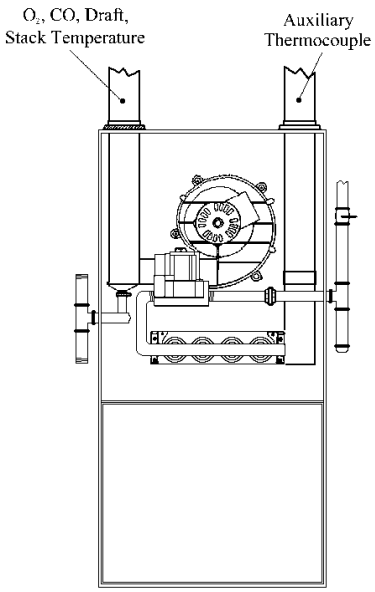

90% Condensing Furnace/Boiler

Condensing furnaces/boilers can be tested through a hole drilled in the plastic vent pipe (when allowed by the manufacturer or 'local authority of jurisdiction) or taken from the exhaust termination.

In order to obtain an accurate Steady State Efficiency reading, an auxiliary thermocouple must be inserted in the combustion air intake so that a true net stack temperature is used in the calculation.

It is important to remember that the vent system on these units operates under a positive pressure. As a result, any holes in the vent need to be sealed.

Domestic hot water heaters with the 'bell' shaped draft diverter on top can be accurately tested by attaching a section of copper tubing to the probe or using a flexible probe which is then inserted directly into the top of the fire tube below the diverter.

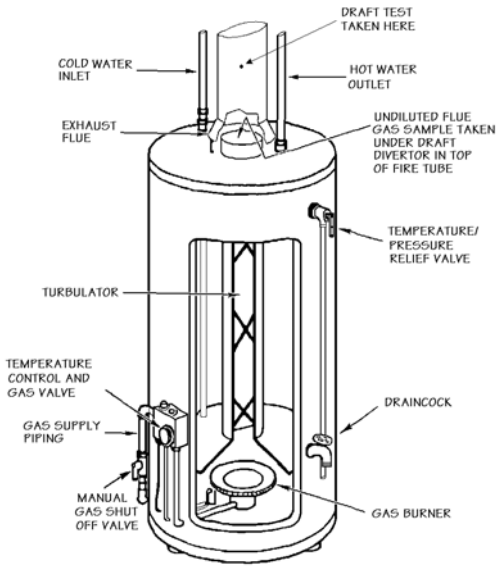

Gas Fired Domestic Hot Water Tank

Another common practice is to insert the probe in the hole drilled for the draft test, direct it down and push it below the level of the draft hood.

When testing boilers with a draft diverter mounted on the back of the equipment, flue gas samples should be taken by passing the probe from one side to the other, again upstream (toward the burner) from the opening into the draft diverter.

Draft tests should be taken from a hole drilled in the vent connector immediately above the diverter.

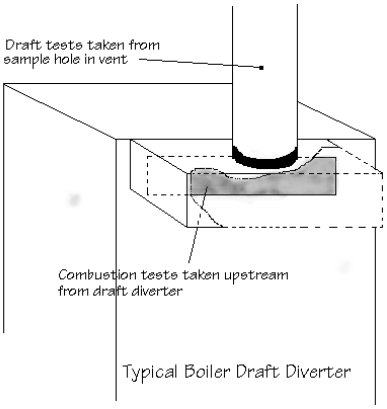

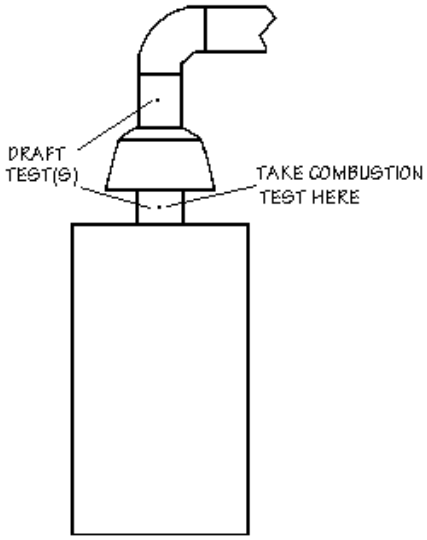

Typical Atmospheric Boiler

Boilers, which have a 'bell' shaped draft diverter directly on top, should be tested directly below the diverter through a hole drilled in the vent connector.

Should draft tests below the diverter measure insufficient draft levels, an additional test should be performed above the diverter to determine if the reason for insufficient draft is related to a chimney problem or a draft hood problem.

It is also a good idea to test any areas with openings that provide a path for combustion air to be introduced to the flame. These areas provide a path where flue gases can potentially be exhausted.

With forced air systems this area is generally limited to immediately in front of the burners while many styles of boilers allow secondary combustion air to also be drawn in from all around the base of the cabinet.

Gas and oil fired power burners should be tested up stream from the barometric, as close to the breech area as possible.

While stack draft may be an important measurement, fuel oil and gas fired power burners require draft control over the fire to maintain a proper and controlled intake of combustion air.

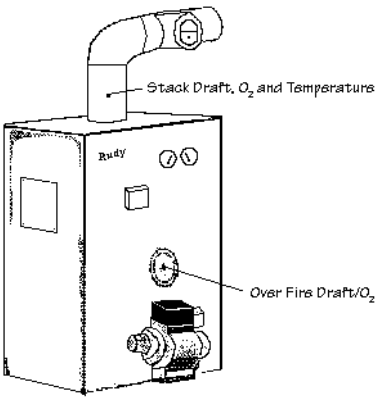

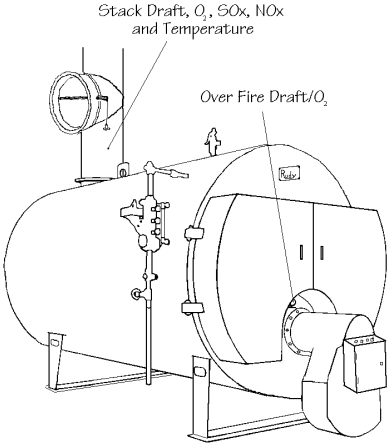

Comparing stack and overfire O_2 can verify that leakage between boiler sections, access door, etc is minimal and the combustion test results are accurate.

Use caution when taking over fire O_2 readings. Do not expose thermocouple or sampling assembly to excess temperatures longer than necessary.

When testing (primarily commercial/industrial) equipment with modulating or multiple firing rates, it is critical that tests are performed throughout the entire firing range.

Failing to test throughout the entire cycle of burner operation may not identify a particular point at which O_2 readings are outside the manufacturer's specifications or excess levels of CO are produced.

Acceptable Combustion Test Results

It is very important to consult with the manufacturer or their literature to determine acceptable ranges of O_2, CO, Stack Temperature, Steady State Efficiency, Smoke and Draft. Requirements for NO, NO_2 and SO_2 emissions (if any exist) vary from local to local.

The following ranges are generally considered acceptable for residential/commercial/industrial units*; always check with the appliance manufacturer of specific recommendations*, particularly when testing 90% residential equipment as recommended test results vary considerably from manufacturer to manufacturer, particularly on 2 stage firing rates.

Residential/Light Commercial Gas Fired Equipment

Combustion Readings	Atmospheric Furnaces, Boilers and Hot Water Tanks	80%, Fan Assist Furnaces, Boilers and Hot Water Tanks	90%, Condensing Furnaces, Boilers and Hot Water Tanks
Oxygen (O2)	6% to 9%	6% to 9%	3% to 9%
Stack Temperature (□F)	325□ to 500□	350□ to 400□	90□ to 120□
Draft in Water Column Inches (WC")	-.02 WC" to -.04 WC" in the stack	-.02 WC" to -.04 WC" in the stack	PMI
Carbon Monoxide in Parts Per Million (ppm) Air Free	<50 ppm air free (Goal)	<50ppm air free	<50ppm air free or PMI
	>100ppm air free (Excessive)	>100ppm air free (Excessive)	>100ppm air free (Excessive)

Oil Fired Power Burners

Combustion Readings	Residential Furnaces, Boilers and Hot Water Tanks	Commercial Boilers
Oxygen (O2)	5% to 7%	4% to 6%
Stack Temperature (□F)	355□ to 450□	325□ to 425□
Draft in Water Column Inches (WC”)	-.01 WC” Overfire or PMI*	-.01 WC” Overfire or PMI
Carbon Monoxide in Parts Per Million (ppm) Air Free	<50 ppm air free (Goal)	<100ppm air free (Goal)
	>100ppm air free (Excessive)	>200ppm air free (Excessive)
Smoke	Zero or PMI (Bacharach smoke number)	Zero or PMI (Bacharach smoke number)

Commercial Gas Fired Power Burners

Combustion Readings	Low Fire (Light Off)	High Fire
Oxygen (O2)	6% to 9%	3% to 6%
Stack Temperature (□F)	NA	325□ to 400□or PMI
Draft in Water Column Inches (WC”)	-.01 WC” Overfire or PMI*	-.01 WC” Overfire or PMI
Carbon Monoxide in Parts Per Million (ppm) Air Free	<100ppm air free (Goal)	<100ppm air free (Goal)
	>300 - 400ppm air free (Excessive)	>200ppm air free (Excessive)

Appendix 3–B

Inspection and Testing Procedures for all appliances Natural Gas or Liquid Petroleum

The following inspection procedures shall be performed on all gas fired furnaces, boilers, water heaters and space heaters. The goal of these measures is to reduce Carbon Monoxide, stabilize flame, test safety controls, and increase efficiency.

Inspect the burners for dust, debris, misalignment, and other flame interference problems.

Clean, vacuum, and adjust as needed.

Look for soot, scorched wires, peeling paint, scorch marks, and other evidence of flame roll out.

Inspect the heat exchanger for cracks and leaks.

Assure that all 120-Volt wiring connections are enclosed in covered electrical boxes.

Clean the blower. If equipped with a belt driven blower motor, check the belt for cracks, splits, and adjust and lubricate as necessary.

Replace or clean the filter.

Clean and level thermostat, and check heat anticipator setting. The heat anticipator setting should match the measured current in the control circuit, or match the PMI setting on the data plate.

Determine if pilot is burning (if equipped), and that main burner ignition is satisfactory. (replacing the thermocouple is optional)

Sample the undiluted combustion gases with a calibrated flue gas analyzer.

Adjust burner shutters (if equipped) and gas pressure to bring flue gases to acceptable levels.

Test pilot safety controls (for pilot systems) for complete gas valve shutoff when pilot is extinguished.

Check venting system for proper size and pitch, obstructions, blockages, and clearances to combustibles.

Check venting system for proper draft.

Test limit switches for proper operation. Record all information.

Appendix 3 - B 1

Inspection and Testing Procedures for Electric Furnaces and Electric Heat Pumps

The following inspection procedures shall be performed on all electric furnaces and Electric heat pumps. The goal of these measures is assure safe operation, test safety controls, and increase efficiency.

Check cooling temperature drop: Return air temp. minus supply air temp. = temperature drop. Range should be within 18 to 21 degree F or PMI.

Use refrigerant leak detector to inspect for thermal fluid leakage. If leakage detected, promptly contact an EPA certified technician to correct the problem.

Inspect main electrical power supply to the unit.

Determine if furnace, heat pump/AC unit has a dedicated circuit that is properly sized and fused.

Determine if operational disconnect switch is present.

Visually inspect all wiring at/in unit to detect charred, frayed, or missing wire insulation, and for improper or loose connections.

Assure that all 120/220 volt wiring connections are enclosed in covered electrical boxes.

Visually inspect indoor coil drain to determine if there is proper condensate drainage.

Visually inspect the A-coil for cracks and/or holes.

Visually inspect for dirty or obstructed fins, filters, and ducts.

Clean the blower. If equipped with a belt driven blower motor, check the belt for cracks, splits, and adjust and lubricate as necessary.

Replace or clean the filter.

Clean and level thermostat, and check heat anticipator setting. The heat anticipator setting should match the measured current in the control circuit, or match the PMI setting on the data plate. Record all information.

Appendix 3 – B 2

Inspection and Testing Procedures for all appliances that burn Fuel Oil

The following inspection procedures shall be performed on all gas fired furnaces, boilers, water heaters and space heaters. The goal of these measures is to reduce carbon monoxide, stabilize flame, test safety controls, and increase efficiency.

Visually check for fuel leakage in kerosene or fuel oil distribution lines. Visually check the fuel oil storage tank for leaks and in-line filter and shut off.

Inspect the burners for dust, debris, misalignment, and other flame interference problems.

Clean, vacuum, and adjust as needed.

Look for soot, scorched wires, peeling paint, scorch marks.

Inspect the heat exchanger and combustion chamber for cracks and leaks.

Assure that all 120-Volt wiring connections are enclosed in covered electrical boxes.

Clean the blower. If equipped with a belt driven blower motor, check the belt for cracks, splits, and adjust and lubricate as necessary.

Replace or clean the filter.

Clean and level thermostat, and check heat anticipator setting. The heat anticipator setting should match the measured current in the control circuit, or match the PMI setting on the data plate.

Determine if main burner ignition is satisfactory.

Perform smoke testing then sample the undiluted combustion gases with a calibrated flue gas analyzer.

Check venting system for proper type, size and pitch, obstructions, blockages, and clearances to combustibles.

Check venting system for proper draft and proper operation of barometric damper.

Test limit switches for proper operation.

Record all information.

Appendix 3 – B 3

Inspection and Testing Procedures for Solid Fuel Furnaces and Stoves

The following inspection procedures shall be performed on all solid fuel furnaces and stoves. The goal of these measures is to reduce Carbon Monoxide and insure safe operation of the unit.

Insure unit is installed over a UL approved stove pad.

Heat exchanger/cabinet leakage or corrosion. To include visual check of door gasket or seal.

Unsafe and/or improper wiring, if applicable.

Look for soot, scorched wires, peeling paint, or scorch marks.

Clean the blower, if applicable. If unit has a belt driven blower motor, check the belt for cracks, splits, and adjust and lubricate as necessary

Check venting system for proper size and pitch, obstructions, blockages, and clearances to combustibles.

Ensure all clearances outlined in NFPA 211 for unit and vent pipe are achieved.

Record all information.

Appendix 3 - C

Cooling Equipment Inspection Requirements

For both existing cooling equipment that is to be kept in service and newly installed cooling equipment, a thorough inspection **shall** be required, and **shall** address the following:

a. The system **shall** be inspected for refrigerant leaks. If leaks exist, they **shall** be repaired. The repairs and re-fills **shall** be performed by an EPA-certified technician.

b. The electrical wiring **shall** be inspected. If wiring is frayed, or if the wiring or equipment is loose, or improperly installed, or if the equipment is connected to an electrical circuit shared with other appliances, inadequately sized, or with improper over current protection, then the problems **shall** be corrected. Repairs to wiring, circuitry and over-current protection **shall** conform to the appropriate section of the *NEC (NFPA 70A).*

c. Clearances **shall** be checked and **shall** conform to the *manufacturer's installation instructions and the 2006 RCO, Chapter 14*. If not, proper clearances **shall** be created.

d. cooling fans **shall** be inspected to see if they are dirty or clogged, or in need of repair. If so, the necessary cleaning or repairs **shall** be performed by a qualified individual.

e. Condensate drain lines **shall** be inspected to see if they are obstructed, leaking or improperly installed? If so, the lines **shall** be repaired or replaced.

f. Control devices (e.g. blower motors, fans, filters, thermostats, etc.) **shall** be inspected to ensure that they are not missing, that they are functional, and that they are properly adjusted. If problems are found, the devices **shall** be repaired or replaced.

g. The amount of return air and supply air, on forced air systems, **shall** be adequate for the cooling load. *An ACCA, manual D* **shall** be performed, and the ducts altered or replaced to comply with these requirements and the requirements of the *RRS 3.7*.

Appendix 3 - D

Water Heater Inspection Requirements

Existing water heaters that are in good condition **should not** be replaced. All existing water heaters to be left in place **shall** be inspected based upon the following (also see the requirements at *RRS 3.8*:

1. The tank **shall** be inspected to see if it is leaking or severely corroded. If so, the equipment **shall** be replaced.

2. An Inspection of the water lines coming into the tank **shall** be conducted. A cold water supply shut-off valve **shall** be present, functioning, and not leaking. If there are problems, a functioning shut-off valve **shall** be installed. The water supply line connections **shall** be inspected to ensure that they are not leaking or severely corroded. If so, the lines **shall** be repaired or replaced. Repairs and replacements of water supply lines **shall** conform to *RRS Chapter 5*. Dielectric Fittings **shall** be installed between water line connections of differing materials.

3. A clean and tune for all existing water heating equipment that **shall** be retained includes, at a minimum:

   a) Test/repair all gas leaks from the appliance manual shutoff valve to the appliance.

   b) Inspect and clean the combustion chamber, burner, fire tube, and baffle.

   c) Replace the thermocouple.

   d) Measure/improve draft pressure.

   e) Confirm/adjust outlet gas pressure.

   f) Measure carbon monoxide (CO) content (Max 100PPM).

   g) Set hot water temperature at 120-130 degrees F. Be careful about setting water temperature too high, particularly with children, disabled or elderly persons occupying the house.

Appendix 3 – E

GUIDELINES FOR SIZING WATER HEATERS AND CALCULATING PAYBACK

This appendix is offered as a guide for selecting an appliance which will meet the needs of the household efficiently and economically. Two approaches are offered. One approach is to simply use Table 3301.2 in CABO Chapter 33. Table 3301.2 provides recommended water heater storage capacity, BTU/hr input, draw and recovery rates based on the number of bathrooms and bedrooms present in the home. A sample portion of the information found in Table 3301.2 is provided below:

Dwellings with 1 to 1 and 1/2 Bathrooms

Type of Fuel	Gas	Electric	Oil	Gas	Electric	Oil
Number of Bedrooms	2	2	2	3	3	3
Storage (gals)	30	30	30	30	40	30
Input (BTU/hr or kw)	36K	3.5	70K	36K	4.5	70K
Draw (gph)	60	44	89	60	58	89
Recovery (gph)	30	14	59	30	18	59

Dwellings with 2 to 2 and 1/2 Bathrooms

Type of Fuel	Gas	Electric	Oil	Gas	Electric	Oil
Number of Bedrooms	3	3	3	4	4	4
Storage (gals)	40	50	30	40	50	30
Input (BTU/hr or kw)	36K	5.5	70K	36K	5.5	70k
Draw (gph)	70	72	89	72	72	89
Recovery (gph)	30	22	59	32	22	59

Another approach is to use the procedure outlined in the GAMA Consumer's Directory of Certified Energy Ratings (GAMAnet.org). This approach is more exact in that it considers estimated water usage to determine the right "size" equipment. Also, it includes methodology for estimating and comparing the operating costs of equipment in order to select the most cost-effective appliance. Before completing the steps, there are several things that must be known:

1. The number of plumbing fixtures in the dwelling

2. The number of occupants in the household and their general use patterns. This is critical in order to establish the time of day and the frequency that hot water is used. For example, when are baths or showers taken, clothes washed and dishes washed? The purpose of this is to establish the peak demand for the first hour of usage.

3. The Energy Factor (EF) of the models of water heaters being considered for installation. This information is available in the GAMA directory for those manufacturers participating in the certification program.

4. The cost to install the models of water heaters being considered.

STEP 1: Estimating Peak Hour Demand (Sizing the Water Heater)

a. Multiply the number of activities using hot water during the busiest hour of the day times the estimated average number of gallons used per activity. Some activities and estimated average usages are; bath/shower - 20 gals., shaving - 2 gals., hand/face washing - 4 gals., shampooing - 4 gals., hand dishwashing - 4 gals. and automatic clothes washing - 32 gals.

b. Add the estimated average usages for the first hour. The result is the household's peak first hour demand.

c. Select models of water heaters that have a peak first hour demand rating that is close (give or take 2 gals./hr) to the peak first hour demand for the household. This information is available in the GAMA directory.

STEP 2: Calculating Payback

a. Determine the water heater's estimated annual operating cost by using the chart provided in the GAMA directory. Find the chart for the appliance's fuel. Find the column for the appliance's EF. Find the row for the appropriate fuel cost. Follow the row across to the intersection of the EF column. The result is the appliance's estimated annual fuel operating cost. Repeat for each model to be considered.

b. Subtract the installation cost of the higher EF model from the installation cost of the lower EF model. This is the amount of additional costs required to buy and install the higher EF model.

c. Subtract the annual estimated operating cost of the higher EF model from the estimated annual operating cost of the lower EF model. This is the amount of money the higher EF model will save each year of operation over the lower EF model.

d. Divide the annual savings (from Step 2, c) into the additional costs (from Step 2, b). The result is the number of years before the savings generated by the higher EF model will off-set the increased cost of installing the higher EF model. After that time, the savings will accrue to the owner.

Appendix 4 - A

ELECTRIC RECEPTACLE AND FIXTURE LOCATION REQUIREMENTS

INTERIOR LOCATIONS:

Kitchens:

- All kitchen receptacles **should** be on a three wire grounded 20 amp circuit and **shall** be GFCI protected unless for a dedicated appliance on a dedicated circuit (see NEC Article 210-8(a) (5) b).

- Receptacle outlets **shall** be installed every 48 inches at each kitchen wall counter space 12 inches or wider, and **shall** be installed so that no point along the counter line is more than 24 inches from a receptacle outlet in that space (see NEC Article 210-52).

- The kitchen **shall** have two dedicated 20 amp small appliance branch circuits that serve only the kitchen.

- The kitchen **shall** have a non-GFCI protected receptacle for the refrigerator which **should** be located directly behind the refrigerator.

- A permanently installed overhead lighting fixture controlled by a wall switch **shall** be required in the kitchen.

Bathrooms:

- The bathroom **shall** have at least one dedicated 20 amp receptacle outlet, which **shall** be GFCI protected, marked in the service panel, and **shall** be located at least thirty 30 inches and not more than 48 inches above the floor adjacent to the lavatory and not more than 3 feet of the outside edge of each basin and at least twelve inches from the outer rim of any bathtub or shower opening.

- A permanently mounted switch controlled ceiling or wall lighting fixture **shall** be present. Hanging fixtures or lighting tracks **shall not** be located over the tub unless they are over 8 feet above the tub or labeled for wet locations.

- Exhaust fans **shall** include a closure device that seals the duct when the fan is not operating. Ducts **shall** lead directly to the outside air (see ducting requirements noted in RRS Section 2.8.1).

- All bathrooms **shall** have an exhaust fan. Newly installed bathroom exhaust fans **shall** be able to move enough air for 8 air changes per hour. All replacement or new exhaust fans **shall** be a maximum of **2.5** sones. The fan **should** be installed in a manner that will encourage the occupants to use it and to leave it on long enough to be effective, for 20 minutes to an hour after showering. All exhaust fans **shall** be installed in compliance with the requirements at *RRS 2.6.4*.

Habitable Rooms (Bedrooms/Living Room/Dining Room/Family Room/Den/Parlor):

- One of the following **shall** occur:

    - In each family room, dining room, bedroom, living room, parlor, library, den, sunroom, recreation room or similar room or area, receptacle outlets **shall** be placed so that at a minimum each wall has no less than one receptacle; or

    - The receptacles **shall** be spaced so that no point along the perimeter of the floor is more than six feet from a receptacle. Receptacles **should** be spaced equal distances apart.

- All existing non-grounded receptacles **shall** be replaced with new polarized non-grounding receptacles, or GFCI receptacles, or the circuit shall be GFCI protected in a two-wire system, and **shall** meet the requirements of *RRS 4.6.2*.

- ARC-Fault Circuit Interruption (AFCI) protection may be required in bedrooms depending on local code interpretation. Refer to NEC Article 210.12 which notes the requirements of installation in bedrooms. Local code **shall** be followed.

Laundry Rooms and Utility Areas:

- Every laundry room/utility area **shall** have a receptacle outlet. The washer **shall** have a dedicated (single outlet) receptacle on a separate dedicated 20 amp circuit labeled in panel box (*see NEC Article 220-4c*). Also see the requirements at *RRS 4.4.1 and 4.6.5*.

- The laundry room/utility area **shall** have a permanent lighting fixture controlled by a wall switch.

Closets and Pantries:

- Closet lights **should** be installed, and unsafe fixtures **shall** be removed.

- Only surface mounted or recessed fluorescent fixtures, or recessed incandescent fixtures with enclosed lamps **shal**l be installed in closets in the wall or ceiling no less than six inches away from any storage as required by NEC Article 410.8.

Hallways:

- A receptacle **shall** be installed in hallways 10 feet or longer. A convenience receptacle **should** be installed in each hallway.

Attics and Crawlspaces:

- A permanent electric light fixture and outlet **shall** be installed near all heating equipment located in enclosed rooms, attics and crawl spaces to provide for maintenance needs. The light **shall** be controlled by a switch located at the passageway opening.

Unfinished Basements and Garages:

- Outlets installed in unfinished basements and or crawl spaces **shall** be GFCI protected (see NEC Article 210-8 (a) (4). Exception- a receptacle located in a dedicated space for an appliance, such as a washing machine.

- Every basement **shall** have at least one switch controlled light fixture and one general purpose outlet.

- Every attached garage (and detached garages with power), **shall** have at least one GFCI protected receptacle outlet located at least 48 inches above floor.

Equipment:

- Furnaces and Air Conditioning equipment **should** have their own electrical disconnects which are within sight of and readily accessible from equipment for which it is intended and are of correct amperage and installed in accordance with all relevant NEC provisions.

- A permanent electrical receptacle and lighting fixture **shall** be provided near all heating appliances located in enclosed rooms, attics, basements and crawlspaces.

- Wiring for room air conditioners **shall** conform to NEC Article 440-60 thru 64.

- Electrical circuits for well pumps (jet pumps or submersible pumps), sump pumps, and septic aerators **shall** be on dedicated circuits labeled in the panel box in accordance with NEC requirements.

- Equipment, such as washing machines and ranges **shall** be grounded per the requirements of NEC 250.140.

EXTERIOR LOCATIONS:

- Exterior outlets **shall** be GFCI weather protected per NEC Article 210-52. Each dwelling **should** have 2 weather protected GFCI receptacles installed, one located at the front and one located at the rear of the unit.

- A permanently installed light fixture controlled by a wall switch **shall** be located at each exterior door.

Appendix 5 – A

GUIDELINES FOR SIZING PLUMBING SUPPLY LINES

Following is a simplified procedure for helping to determine the adequacy of existing water supply lines and in the sizing of new water supply lines. For this method to be reasonably accurate the water pressure at the main shut-off valve where the water comes into the building must be within the range specified in 5.2.4.1 (40-80 psi) and the elevation of the highest fixture above the service valve must be less than 25 feet.

For more detailed, more accurate methodology or for systems outside the above parameters the following references might be useful: OPC Appendix E, CABO Appendix C; Practical Plumbing Engineering by Cyril M. Harris, and Do-It-Yourself Plumbing by Max Alth (see the bibliography for complete listings).

Other variables such as age of piping, number and type of fittings, and design of fixtures also affect the pressure. For this reason no formula or procedure can account for all variables and be fully relied upon to fit every situation, but must be augmented with actual field testing and experience. However, this procedure can serve as a basic guideline for proper sizing of water supply piping. Following are the steps in the process:

1. For each pipe interval, determine the fixture load that it carries using Table 5 – A1 (For multiple fixtures use the guidelines set out below).

    A. Only count hose bibs at 50% when adding to the total load.

    B. When combining three or more fixtures (not fixture groups), multiply by .9.

    C. When combining one or more fixtures with a fixture group, multiply by .9.

    D. When combining two fixture groups multiply by .8.

    E. When combining three or more fixture groups or two or more fixture groups + one or more fixtures multiply by .7.

    F. Use fixture groups when possible.

TABLE 5-A1

Water Demand of Fixtures and Fixture Groups in Gallons Per Minute			
Fixture Type Or Group	Total	Hot	Cold
Lavatory Faucet	2	1.5	1.5
Bathtub Faucet Or Shower Head	5	4	3.5
Toilet Tank	3		3
Kitchen Sink	4	3	3
Dishwasher	4	4	
Laundry Tub	5	3.25	3.25
Washing Machine	5	3.5	4
Hose Bib	5		5
Kitchen Group (Sink and Dishwasher)	7	5.5	3*
Laundry Group (W. M. And L. Tub)	8	6	6.5
1/2 Bath Group (Lavatory and Toilet)	4.5	1.5*	4
Full Bath Group (Lav., Toilet, Tub/Sh.)	8	5.5	7
1 1/2 Bath Group	9.5	7	7.5
2 Bath Group	12	9.5	8.5
2 1/2 Bath Group	13	10	9
3 Bath Group	15	11.5	10

* Really a single fixture and not a fixture group.

2. Determine the type of piping that was or is to be used.

3. Using Table 5-A2 below determine the size of the piping necessary to carry the amount of demand from the calculations above.

TABLE 5-A2

PIPE SIZING BASED ON VELOCITY LIMITATION

Flow of pipe in gallons per minute					
Nominal Pipe Size (Inches)	Copper Water Tube			CPVC or Polyethylene	Steel Pipe
	Type K	Type L	Type M		
1/2	5.4	5.8	6.3	7.6	7.6
3/4	10.9	12.1	12.9	13.3	13.3
1	19.4	20.6	21.8	21.5	21.5
1 1/4	30.3	31.3	32.6	37.3	37.3

1. Pipe sizing based on velocities of 8 feet per second to avoid excessive noise in system; shock damage to pipe, fittings, and equipment; and accelerated corrosion.

2. Actual flow also depends on the roughness of the pipe and the amount of mineral deposition inside the pipes, which will vary with the age of the pipe and the water quality, especially with galvanized pipe.

3. Flow rates are based on copper water tube which conforms to ASTM B 88.

4. Flow rates are based on chlorinated polyvinyl chloride pipe, schedule 40, which conforms to ASTM F 441.

5. Flow rates based on polyethylene pipe, schedule 40, which conforms to ASTM D 2447.

6. Flow rates based on galvanized steel pipe, schedule 40, which conforms to ASTM A 53.

Appendix 7 – A

Lead-Based Paint Requirements and Guidance

Introduction and Background

Housing Rehabilitation and Lead Hazard Mitigation

Planning and Preparation

- Policy Considerations
- Personnel Issues
- Procedural Issues

Housing Rehabilitation / Hazard Mitigation Process

Attachments/Exhibits

- Exemptions
- HUD/EPA Letter
- Example of Computation of Rehabilitation Costs
- Rehabilitation Costs Computation Worksheet
- Terms and Conditions
- Interim Lead Inspection Report
- Notification of Evaluation
- Notification of Presumption
- Notification of Hazard Reduction
- Lead-Based Paint Disclosure Form for Sellers
- Lead-Based Paint Disclosure Form for Lessors
- Resources

Introduction

The purpose of this chapter is to highlight the important issues regarding lead-based paint relative to housing activities in order to provide guidance to persons involved in implementing housing programs. **It is not a substitute for, and is not intended to be, a complete restatement of all requirements and regulations concerning lead-based paint. Such a document would be quite lengthy and the information that is readily available on the internet or from other sources. References to those resources is provided at the end of this section, and the reader is advised to become familiar with these resources and to consult them as necessary when implementing any housing activity that will disturb a painted surface in housing covered by lead-based paint regulations.**

Overview/Background

Despite the fact that lead had been known to be a hazardous substance for many years, until quite recently lead was continually brought into the human living environment through a variety of sources, including leaded gasoline and lead-based paint. Over the past 20 years, the removal of lead from gasoline, food canning and other sources has been successful in reducing population blood lead levels by over 80%. However, nearly one million children still have excessive levels of lead in their blood, making lead poisoning the number one childhood environmental disease.

According to the Center for Disease Control (CDC), lead-based paint in housing is the remaining major source of exposure and is responsible for most cases of childhood lead poisoning today. Although lead was banned from residential paint in 1978, more than half of the total U.S. housing stock contains some lead-based paint.

Table 1 is an estimate of the number of housing units with lead-based paint hazards in Ohio. The figures in Table 1 are based on a variety of sources, which are indicated in the footnotes that accompany the table. Table 1 reflects the number of units <u>occupied</u> by low- and moderate-income households, rather than units <u>affordable</u> to LMI households, which would greatly inflate the number of units eligible for HUD assistance.

Table 1: Estimated Units Affected By Lead-Based Paint in Ohio

1	2	3	4	5	6	7	8	9	10	11
Year Constructed	Tenure	Total Occupied Units	Percent Units With Lead Paint	Number Occupied Units With Lead Paint	Percent Occupied Units With With Lead Hazard**	Number Occupied Units With With Lead Hazard	Percent Units With Hazard Occupied By LMI Households	Number Units With Hazard Occupied By LMI Households	Percent LMI Units With Hazard With Children Under 6	Number LMI Units With Hazard With Children Under 6
Before 1940	Owner	694,906	90.0%	625,415	44.0%	275,183	37.4%	102,819	17.8%	18,302
	Renter	339,530	90.0%	305,577	44.0%	134,454	66.5%	89,474	17.8%	15,926
1940 - 59	Owner	824,749	80.0%	659,799	18.0%	118,764	35.1%	41,674	17.8%	7,418
	Renter	286,391	80.0%	229,113	18.0%	41,240	64.4%	26,543	17.8%	4,725
1960 - 79	Owner	935,325	62.0%	579,902	9.5%	55,091	25.0%	13,796	22.2%	3,063
	Renter*	468,230	62.0%	290,303	9.5%	27,579	67.2%	18,543	22.2%	4,117
Total Owner =		2,454,980		1,865,116		449,037		158,288		28,782
Total Renter =		1,094,151		824,992		203,273		134,560		24,768
Total =		3,549,131		2,690,109		652,310		292,848		53,550
Percent of Total =		100.0%		75.8%		18.4%		8.3%		1.5%

*49,534 in Public Housing Units deleted from figure as lead hazards in these units have been addressed by HUD via local housing authorities. 6/7/2000

**Percent lead hazards 1960-79 units estimated, based on percent units with interior lead paint compared to 1940-59 (per HUD National Lead Paint Survey, 1991) . and applying this ratio (44%) to 1940-59 percentage (44% * 18%= 9.5%); other percentages from HUD Economic Analysis of HUD Rule on Lead Base Paint Hazards.

Sources: Columns 1-3: U.S. Census; Column 4: HUD 1990 National Survey on Lead-Based Paint; Columns 6: Eliminating Childhood Lead Poisoning, President's Task Force on Environmental Health Risks and Safety Risks to Children, 2000; Column 8: Oho Department of Development Office of Strategic Research; Column 10; Eliminating Childhood Lead Poisoning, President's Task Force on Environmental Health Risks and Safety Risks to Children, 2000.

On October 28, 1992, President George Bush signed into law the Housing and Community Development Act of 1992 that included as Title X, the Residential Lead-Based Paint Hazard Reduction Act of 1992. Title X changed the entire federal approach to lead-based paint and increased emphasis on prevention of childhood lead poisoning through housing-based approaches. The U.S. Environmental Protection Agency was assigned the lead responsibility for regulations concerning lead-based paint hazards, but, as part of this approach, Title X required HUD to incorporate lead-based paint hazard mitigation into its regulatory framework.

On September 15, 1999, HUD issued the Final Rule on Lead-Based Paint (24 CFR Part 35, et. al., Requirements for Notification, Evaluation and Reduction of Lead-Based Paint Hazards in Federally Owned Residential Property and Housing Receiving Federal Financial Assistance). Those regulations established procedures for mitigating hazards caused by lead-based paint that apply to all HUD-assisted projects. This includes projects and activities that are assisted with CDBG, HOME, ESG and HOPWA funds.

One of the major obstacles to implementing the HUD regulations in Ohio was the state law. The policy of the Ohio Department of Health (ODH), which is the agency responsible for applying the state law, required all lead hazard control measures to be performed by licensed lead abatement personnel. In contrast, both EPA and HUD accepted interim control measures as an effective treatment protocol. While HUD regulations require persons who apply interim control measures to be trained, the training is much time-consuming and costly than the training and licensure procedures required for abatement. The consequence of this was that many housing rehabilitation contractors and their workers, who did not wish to become licensed abatement personnel, would not be able to work on most HUD-funded housing rehabilitation projects, which often only required interim control measures.

State legislation was proposed to address these and other issues, and was introduced into the Ohio General Assembly in the Fall of 2001 in the form of House Bill 248. H.B. 248 was adopted by the Ohio House in the Spring of 2002, and passed the Senate in December 2002. The provisions of H.B. 248 made it possible to implement the HUD regulations.

Essentially, the oversight of lead safe renovation was removed from the not regulated work that was performed by lead-safe renovators, who were persons who had successfully completed a one-day Remodeler's and Renovator's Training Program, as required by the HUD regulations. This one-day training is much more feasible for contractors and their workers than the several days of lead abatement training that had been required by the original state law. Although the ODH has no direct regulatory authority over lead-safe renovators, ODH retained the authority to approve persons who train lead safe renovators. The key provision of the state law is that lead-safe renovators cannot perform work on units where a lead-poisoned child is residing. **Work on units housing children with an elevated blood lead level (EBL) can only be performed by a licensed lead abatement contractor.**

Because the Ohio Department of Health does not regulate Lead-Safe Renovators, there is no formal registration required nor is there any registration or licensure fee. However, ODH does maintain a listing of lead-safe renovators, and persons who have successfully completed the Remodeler's and Renovator's Training Program may wish to register with ODH.

The question may arise as to who does regulate Lead-Safe Renovators? The contractor in charge of the project is subject to oversight by the Occupational Safety and Health Administration (OSHA), which oversees that laws pertaining to worker safety are followed. The homeowner, with whom the contract was made, has some oversight responsibility and ultimately can bring suit against the contractor if the work was not performed in a lead-safe manner. Usually, local housing programs enter into agreements with property owners that give the program the authority to oversee that the work is being performed according to the work specifications and that the HUD requirements regarding lead hazard mitigation are being fulfilled. This aspect of housing rehabilitation is nothing new, and is comparable to other special trades work, such as electrical, plumbing, or HVAC work. Like those special trades, it does require some specialized knowledge of the person responsible with overseeing that the work is being performed properly. Much of this can be obtained from reading the regulatory requirements, but the safe work practices can best be learned by taking the Remodeler's and Renovator's Training. OHCP has posted a number of materials pertaining to the lead-based paint issue at its website at http://www.odod.state.oh.us/cdd/ohcp/Lead.htm.

Housing Rehabilitation and Lead Hazard Mitigation

This section is based upon Subpart J of HUD's lead-based paint regulations, which governs housing rehabilitation. Note that most of the requirements have been integrated into the information presented below but this material is intended as a guide and persons implementing a housing program must understand Subpart J and related definitions and requirements

Planning and Preparation

Policy Considerations

Prior to undertaking any activity that involves mitigation of lead-based paint hazards, adequate preparations need to be made so that the project can proceed as smoothly as possible and follow all of the HUD and state requirements. Probably the first step is to review the September 15, 1999 Lead-Based Paint regulations, particularly Subpart J. The HUD Guidance on the regulations should also be reviewed. The next step is to develop clear policies and procedures. It may be helpful to speak to other programs that are performing lead-based paint hazard mitigation to learn what works best for them and what they have learned from their experiences. Some policy issues that must be considered include:

1) **Relocation**

   Will the program provide any assistance to owner-occupied properties for temporary relocation while the rehabilitation and hazard mitigation work is progressing? Because the housing rehabilitation program is voluntary, the program can require that the homeowner is responsible for finding alternative accommodations during the rehabilitation and lead hazard mitigation work. Such a policy should be carefully considered so that persons who have incomes below 50% AMI and do not have relatives or close friends in the area are not precluded from receiving assistance.

2) **Limits of Assistance**

Will the program establish a separate maximum assistance limit for units where lead hazards must be addressed during rehabilitation? The CHIP recognizes that the scope of work for projects involving lead hazard mitigation work will be more costly, and allows a higher maximum assistance limit of up to $35,000 for such units. The program will have to determine whether it will adopt this higher limit, a lower limit, or to require all projects be limited to the same maximum. If the program will be working in an area that has a high percentage of units built before 1950 and the area is predominately lower-income households, it is likely that many of these units will have lead based paint hazards present, and some may require abatement.

3) **Reserving Funds Until Clearance**

As in a typical rehabilitation project, there always is the possibility that the contractor may not complete the contract. Where lead-based paint issues are involved this is perhaps even more important. In addition to passing the normal final rehab inspection, if the project does not pass clearance, the contractor minimally will have to re-clean the entire unit and have the clearance inspection done again. There needs to be an incentive for the contractor to continue to follow up in a timely manner and resolve these issues or another contractor may need to be involved. Resources need to be held back and available for this contingency until final clearance is achieved.

4) **Children with Elevated Blood Leads**

In the event applicants for housing rehabilitation assistance have children less than 6 years of age, the program can suggest (**but cannot require**) that the children be tested for Elevated Blood Lead (EBL) prior to the start of the project. While it is not permissible to require that parents have children tested, it can be suggested, and may be an issue if the unit is built before 1950 and is in an area where other children have been identified with EBLs. However, consideration must also be given to the consequences if the child is EBL. First, under state law, the test results will automatically be referred to the Ohio Department of Health, which can then perform an investigation of the cause for the EBL. If the unit is determined to be the cause, ODH can issue a Lead Hazard Control Order, which will require the owners to have the hazards addressed within 45 days. Secondly, once a child under 6 is determined to have an EBL, only licensed lead abatement contractors can work on the unit. Should the program suggest that parents have their children tested for EBL, it would seem reasonable that the program should then proceed with the rehabilitation should the child have an EBL, causing the project to become an abatement project.

5) **Abatement Projects**

Related to the above issue, another policy issue that needs to be decided is how the program will handle abatement projects. If the HUD rehabilitation amount will be $25,000 or more if an EBL child under 6 is a resident of the unit, abatement is required.

Some communities with a high incidence of EBL children may choose to give priority to rehabilitating housing units with lead-based paint hazards or EBL children, which will mean that a number of these projects will be abatement projects. One consideration is cost. While abatement projects can include interim controls, that work would have to be done by abatement workers, and emphasis on an abatement project is on removing or covering the hazardous elements insofar as possible.

One approach may be to "split" the project into abatement work items and other general rehabilitation and special trades work, and have the abatement contractor perform the hazard control work first.

Obviously this requires a high level of coordination. If the program will routinely handle abatement projects, then qualified abatement contractors need to be available at reasonable cost (note that many abatement contractors are not necessarily housing rehabilitation contractors) so that competitive bids can be obtained. Therefore the local program should maintain a list of these contractors that are available to the local program. A related consideration is that, because abatement projects will likely cost more (and involve more extensive work) than a typical rehabilitation project, which will inflate the overall average per unit cost for the program, and likely result in few units being addressed through the program.

6) **Emergency Repair and Home Repair**

Emergency repairs are considered exempt within the context of the HUD lead-based paint regulations, regardless of cost. No worker training or special procedures are required. However, HUD has established its own fairly narrow definition for Emergency Repair, specifically: "emergency repair actions, which are those needed to safeguard against imminent danger to human life, health or safety, or to protect property from further structural damage". This would usually be limited to one item, maybe two if they are tied to the same incident. An entire roof replacement to fix a small roof leak caused by deferred maintenance would not fit this definition, nor may other activities defined as emergencies by local policies. The program needs to understand the HUD definition and where it may differ from local policy.

Home repair is covered by the regulations unless it meets HUD's definition of and exempt activity, which stipulates that the activity cannot disturb **ANY** painted surface, regardless of size (de minimis rule does not apply). Thus, some local emergency repair activities that do not fit HUD's definition of an emergency may qualify as an "exempt" repair activity. This might include a roof replacement. Home repair that is not exempt must follow the Subpart L requirements as discussed later in this section. If a local community wishes to petition HUD for an exemption, they are free to do so, and if such an exemption is granted, it must be documented in the local project case files. However, OHCP will not entertain any requests for exemptions.

7) **Standard Treatments**

The program will need to determine if Standard Treatments ever will be an option, and under what circumstances. Standard Treatments are not an option under Subpart J, but is a totally different approach that is allowed under the regulations for certain types of projects. The regulations state that "if interim controls are required, the designated party has the option to presume that lead-based paint or lead-based paint hazards or both are present throughout the property, omit the risk assessment or lead-based paint inspection or both, and conduct standard treatments in accordance with requirements set forth in subpart R of part 35 in lieu of interim controls. The HUD regulations include the caution that "on the other hand, because no risk assessment is done, standard treatments may be implemented in some units that have no lead-based paint hazards, and resources may be expended unnecessarily".

In the section of the Lead-Based Paint regulations that summarizes HUD's response to public comments, HUD notes that "two recommendations of particular interest are the standards or procedures referred to as 'essential maintenance practices' and 'standard treatments.' These procedures were directed toward rental housing.

Essential maintenance practices are the recommended steps that a landlord should take to reduce the risk of childhood lead poisoning in pre-1978 dwelling units and associated common areas. Standard treatments are more aggressive measures to assure that possible lead-based paint hazards are controlled in older housing." This option, which was not provided in the proposed rule, derives from a recommendation by the Task Force on Lead-Based Paint Hazard Reduction and Financing. The Task Force recommended standard treatments as an option to the risk assessment/interim control approach because standard treatments ''offer the advantage of devoting resources directly to hazard control—and their cost may be minimal for units in good condition.'' Also, the Task Force noted that standard treatments can be carried out by ''in-house maintenance staff who have sufficient knowledge of lead-based paint hazards.''

It is clear from HUD's comments that the Standard Treatments option was designed to provide owners of rental property with a cost-effective option for mitigating lead-based paint hazards in multi-family properties in good condition (likely built after 1950), without having to do an evaluation of every single unit in a project. Standard Treatments were intended to be pro-active and preventative procedures that an owner could follow so that their rental property would not be a source of lead poisoning in children of their tenants. The standard treatments option also was partly based on the idea that maintenance personnel, with training and knowledge on lead-based paint hazards, could follow routine maintenance and work practices that would keep the property in a lead-safe condition.

The standard treatments option poses several problems when applied to a housing rehabilitation program that primarily involves single-family owner occupied rehabilitation. First, the age and condition of units will vary considerably from one unit to another, so the presuming that lead-based paint exists throughout the unit can lead to substantial overspending of resources by addressing surfaces (or houses) that may not even contain lead-based paint.

Another problem with applying standard treatments in the context of a housing rehabilitation program is that there is no risk assessment to provide the information on which to base detailed work specifications. For instance, standard treatments call for a variety of possible applications including paint stabilization, repairs to inadequate substrate prior to stabilization, covering porous horizontal surfaces with various materials, treating impact surfaces through a variety of techniques. For example, stating "address friction surfaces on doors" may be interpreted by a contractor to just stabilize and paint the door, rather than re-hang the door to prevent future abrasion, which may not be required for every door in the house. Or simply painting a stair riser may not be sufficient, and a covering may be needed to prevent future abrasion. This necessarily requires judgments to be made on these issues, which cannot be omitted from the work specifications and left to the discretion of contractor. In fact, this is exactly the function of a risk assessment, which is defined as "a report explaining the results of the investigation and options for reducing the lead-based paint hazards". Absent such a report, the specification would need to be prepared by a rehabilitation specialist who likely would not have sufficient knowledge to write such a report.

Finally, if there is lead-based paint in the house and interim controls are applied, the owner-occupants will be provided with information on where the lead is located and will need to maintain those surfaces so that lead hazards do not reappear. Absent an inspection or Risk Assessment report, residents would need to assume that every surface in the house contains lead-based paint, and treated accordingly, which may not be accurate.

Personnel Issues

It is also important to make certain that key personnel have the proper training and guidance to implement a rehabilitation program that addresses lead based paint hazards.

1) **Lead Hazard Reduction and Housing Rehabilitation**

One of the key decisions is how the program will identify lead-based paint hazards, prepare and how it will integrate mitigation procedures into the rehabilitation work specifications. There are several ways to do this. The program could have the rehabilitation specialist trained and licensed as a Risk Assessor. As a Risk Assessor, that person would have the ability to perform lead-based paint inspection and to prepare a Risk Assessment. As a rehabilitation specialist, that person would also have the ability to prepare rehabilitation work specifications, and integrate the recommendations of his risk assessment into those work specifications. The same person could then perform a final inspection of the unit and also perform a clearance examination. This structure is probably the best option, because there would be no need to coordinate these two functions, and also would eliminate any possible misunderstanding between the rehabilitation specialist and the Risk Assessor.

Alternatively, the local program could contract with a licensed Risk Assessor to have that person inspect a property and prepare a Risk Assessment, which would be provided to the rehab specialist so they could integrate the lead hazard controls into the work specifications. This structure obviously would require ongoing coordination and communication between the rehab specialist and the Risk Assessor.

Generally, the rehabilitation specialist should perform the initial inspection, because the result of the preliminary work write-up partly will determine what the Risk Assessor will consider. A decision would also need to be made about who would perform the clearance examination of the unit. The Risk Assessor would be able to perform the clearance tests, but if the Risk Assessor is not in the community, this may be more costly than other options such as having the rehab specialist or other staff person trained and licensed as an inspector or as a clearance examiner, either of which could clear a unit where interim controls were applied. A licensed inspector could also clear abatement projects.

Note that OHCP requires that rehabilitation specialists who are not licensed Risk Assessors attend the Remodeler's and Renovator's Training Program in order to understand the correct application of interim controls measures.

2) **Housing Staff and Lead-Based Paint Regulations**

A program will also need to make certain that all persons involved in the rehabilitation process clearly understand the HUD regulations on lead based paint. Throughout the rehabilitation/lead hazard mitigation process, information will need to be communicated to the client and also among staff, and it is important that this information is communicated correctly, at the proper times and in the proper format. In addition, questions will undoubtedly arise during the project and must be answered quickly and accurately. There is no established training for the general requirements for dealing with lead-based paint. However the HUD regulations and Guidance on Interpreting the Regulations are available on the Internet, and these should be read and understood by all staff involved in the process, regardless of the guidance provided in this chapter. Note that the HUD regulations are organized by "Subparts", and Subparts C to M describe specific procedures that are required for different types of activities. Many of the Subparts, such as those dealing with Public Housing Authorities, will not apply to CHIP grantees. All staff should familiarize themselves with Subpart B, General Lead Based Paint Requirements for All Programs, and Subpart R, Methods and Standards. Staff should be familiar with the state law on lead-based paint as well, particularly when abatement projects are triggered.

3) **Training Requirements for Persons Applying Interim Controls**

HUD regulations require that persons performing interim controls have successfully completed the Remodeler's and Renovator's Training Program, or be supervised by someone who has completed that training. However, a trained person must be on site at all times in order to provide supervision of persons who are not trained. A policy decision must be made as to the feasibility of such a mechanism, particularly if contractors will be working on more than one project, or if the trained person is not working on a particular day. The program may adopt a policy of requiring that all workers that will be performing housing rehabilitation activities on units built before 1978 be required to have successfully completed the Remodeler's and Renovator's Training Program.

The program should check the qualifications of any new contractor that is participating in the program, and particularly the projects involving lead-based paint hazard mitigation. The program should try to determine whether any such projects had trouble passing clearance examinations or if the contractor was not adhering to proper procedures.

The program will also need to also make certain that persons who are performing lead hazard mitigation work (contractor's and/or their employees) have the proper training, and that this documentation is maintained by the program. Generally a good practice is to set up a contractor file folder, and have a file for each contractor that participates in the program. In that folder there should be a form from the contractor indicating the persons who are trained to perform lead hazard mitigation work. This form should be updated at least annually, and would probably be sensible to submit an updated listing as part of the paperwork required from the contractor prior to the start of a project.

4) **Subcontractors and Special Trades**

Whether or not subcontractors need to attend the Remodeler's and Renovator's Training Program can also be a policy determination of the local program. Several factors should be considered before adopting such a policy. First, requiring this additional training may cause some special trades contractors to not participate in the program. Secondly, often special trades subcontractors will not be affecting painted surfaces, and, should they disturb any paint, it will often fall below the De minimis levels established by HUD for using safe work practices.

Finally, in those cases when special trades work will significantly affect a painted surface, the general contractor or his trained workers can coordinate with the subcontractor, either performing the work on the painted surface or instructing the subcontractor so that proper procedures are followed. Perhaps the best approach for a program is to make certain the general contractor understands it is his or her responsibility to determine how these issues are handled.

Procedural Issues

1. Before embarking on a housing activity that involves lead-hazard mitigation, it is strongly suggested that the local program prepare a flow chart or other written description of which staff are involved during each step of the process and to prepare a list of specific responsibilities for everyone that is involved, from intake to final inspection. This should be distributed to everyone involved to assure that the appropriate staff are involved during each step and that nothing "falls through the cracks". Copies of all required brochures or forms should be available for staff at all times, and forms used in the program should be modified as necessary, and additional forms prepared as needed before any activity is begun.

2. One important issue is to make certain that the contract documents include the language to assure that the contractor is held to the federal and state requirements, including provisions that:

   - Personnel performing lead hazard control work have certification that they possess the appropriate training or will be supervised by such persons who will be on-site at all times;
   - (Optional) Contractors maintain employee training certifications at the jobsite and furnish them to program staff upon request;
   - Prohibited methods of lead-based paint removal shall not be used (per federal and state law), such as:

     - Machine sanding/grinding*
     - Open flame burning
     - Sandblasting/abrasive blasting*
     - Dry sanding
     - Heat gun above 1000 degrees
     - Uncontained hydroblasting
     - Dry scraping (except as regs allow)
     - Paint Stripping in poorly ventilated area
     - Charring Paint

     *Except as permitted by regulation (i.e., device includes HEPA filter)
   - Required worksite preparation procedures will be followed, including the posting of warning signs;
   - Required worker and occupant protection procedures will be followed;
   - Exception for work that meets the De minimis definition. (The program may want to indicate in the work specifications where the De minimis exemption would apply, and a caution that efforts should be made to minimize dust generation).
   - (Optional) The contractor notify the program within 48 hours of the start of a project, either by phone, fax or e-mail so the inspector will know when the job is in progress
   - Disposal of materials shall be disposed of appropriately according to HUD, EPA or local regulation

Housing Rehabilitation / Hazard Mitigation Process

A list of the steps in the process is outlined in the section entitled "Housing Rehabilitation / Hazard Mitigation Process" below, and sample documents are provided and referenced.

1) Applicant Intake

At the initial contact with a client, an intake form should be filled out that, in addition to name, address, annual income and number of persons in the household, also requests information on (a) the year the structure was built, (b) whether any child under 6 years of age resides in the unit, and (c) whether such children have been tested and found to have an Elevated Blood Lead level. Having this information is important to have at this step, so the person making the initial visit to the unit can take along the appropriate materials.

If the person indicates the unit was built in 1978 or later, then the subsequent questions are probably not as significant because the HUD regulations only apply to housing built prior to this date. Should the client answer yes to (c), the program immediately knows that an abatement contractor likely will be required to perform the hazard mitigation work. Note that even if a house was built after 1977, there are circumstances that could cause a child in the unit to have an EBL, and state law prohibits anyone but a licensed abatement contractor to work on the unit until an investigation is performed and it is determined whether or not the house is the cause of the lead poisoning.

2) Application for Assistance

Usually the next step in the process is for a staff person to meet with the applicant on site, complete the application for assistance and have the homeowner sign and date the application. In the case of a unit built before 1978, the staff person should:

- Take along the EPA-approved brochure "Protect Your Family From Lead in Your Home", give it to the homeowner, and review it;
- Explain the applicable lead hazard control requirements and process:
    a. That a lead inspection (or presumption of lead hazards) will be done of the unit;
    b. That, within 15 days of the determination concerning the lead hazards, the program will meet with the owner(s) to provide them with a Notice of the Evaluation;
    c. That the program will develop a set of work specifications that incorporates the "interim control measures" recommended in the risk assessment (and what "interim control measures" are);
    d. That during the course of the work, that certain areas of their home may be inaccessible as the work progresses and, should it be necessary, the occupant(s) may have to vacate the premises for one or more days;
    e. Upon completion of the work a clearance examination will be need to be performed before the unit (or construction areas) can be accessed by the occupant(s);
    f. The owner will be provided with a "Notice of Hazard Reduction" when the work has been completed, indicating what lead remediation work has been performed and information on where lead-based paint remains in the unit.

- It is strongly suggested that the application for assistance contain a statement to the effect that "I have been provided a copy of the EPA lead hazard information pamphlet that explains the dangers of lead-based paint and lead-safe measures that I can take, and I have been informed of the lead-hazard identification and hazard reduction process, including the possibility that my home (or certain parts of my home) will be inaccessible while the lead-hazard work is in progress and until a clearance examination is performed". This statement should be included near the signature line.

3) Initial Inspection and Risk Assessment

If the rehabilitation specialist does not perform the Risk Assessment, the initial housing inspection should be done prior to the lead inspection and risk assessment. The results of the initial inspection should be provided to the Risk Assessor so that they will know what rehab work is being proposed, and whether such work would disturb a surface containing lead based paint.

4) Categorizing Housing Rehabilitation Project

One of the most important procedures is to correctly classify a housing rehabilitation project unit relative to the lead-based paint requirements. For this step to be accomplished you must determine (1) if the project is exempt and, if not, (2) which category of the Subpart L regulations apply, as follows:

A. Exempt Projects: The listing of project that are exempt from the HUD lead based paint regulations are listed on page 14. If the project is exempt, you can use this page as a checklist and place a copy in the file. This will serve as documentation as to the rationale for determining why the project was exempt. No further compliance with the HUD regulations is required.

B. Subpart L Category: To determine which Subpart L Category the project falls into, you will need to have the actual project cost (the selected bid amount). However a preliminary determination can be made based upon the estimated in the work write-up. Paint testing is required or lead-based paint can be presumed for all categories (a., b and c below). Safe work practices and clearance testing are required in all categories except as noted.

   a. **$0 - $5000**: Repair disturbed paint surfaces and clear the worksite(s), not entire unit. (If paint testing shows no lead present then neither safe work practices or clearance is required). Worksite must be isolated from other areas of dwelling!
   b. **$5,001 – $25,000**: Perform interim controls on identified or presumed hazards and any lead-based paint hazards created by rehabilitation work. Clean and Clear unit.
   c. **$25,001 and greater**: Perform abatement on identified or presumed hazards and any lead-based paint hazards created by rehabilitation work, except interim controls can be used on exterior surfaces. Clean and Clear unit.

To make this determination, it is important to understand a few key concepts:

- HUD regulations allow the cost of lead hazard control work and related costs to be deducted from the project cost in order to adjust (lower) the figure to be used in determining which of the above categories (a ,b or c above) applies. A worksheet is provided for this computation on page 19.

- “Interim Controls” are temporary methods to control lead-based paint hazards in place. “Abatement” is permanently controlling lead hazards.

- Three factors can make a project an abatement project:
  1. If the cost exceeds the $25,000 per unit cost figure (per HUD regulations)
  2. If the intent of the activity is to *permanently* control lead hazards
  3. If the housing unit is occupied by a child under 6 years of age with an EBL

- Rehabilitation that involves the removal of components does not automatically make them "abatement". HUD and EPA issued a joint memo on this issue (page 15 to 17), which indicates that **intent** is the key issue.
  If the intent of the work is to make a unit permanently free of lead hazards, such as window replacement, then it becomes abatement. If the intent of the activity is rehabilitation, then such window replacement would just be a rehabilitation cost (though it still would need to be done in a lead-safe manner). If the cost is to be subtracted (backed out) from the rehab costs as a lead item, then the intent is lead reduction. If it is not backed out, then the intent is rehab. See the example on page 18.

- The worksheet on page 19 effectively accomplishes both determining the HUD rehabilitation cost amount and the intent of the activity. How? Using the window replacement example, if this cost were classified as a rehab cost, it would be consistent with rehabilitation, if it were classified as a lead reduction cost, then it would indicate an abatement project (remember window replacement is not an interim control).

  Note that removal or replacement of a component should never need to fall into the "lead hazard control" category in a housing rehab program. The reason is that the rehab specialist will have determined that either the window is in such poor condition that it needs to be replaced (thus a rehab item) or it is structurally sound, so that interim controls can be applied (a rehab lead-safe renovation item). In this way the worksheet becomes both a means of computation of the HUD rehabilitation as well as verification that the intent of the activity was rehabilitation, not lead hazard control. After having performed an inspection and risk assessment and an initial work write-up the worksheet can then be filled out and the HUD category determined preliminarily. Note that a final determination would need to be made when the bid is selected. A project that is close to or over the $25,000 limit needs to be carefully evaluated prior to putting a project out to bid. If it is likely that it will exceed $25,000, then licensed abatement contractors would need to perform the hazard control work. Note also that once a contract for work is signed, a subsequent change order will not affect the classification of the project.

5) Pre-Bid Meeting

After the work specifications have been prepared, the program should meet with the homeowner(s) to review the proposed work elements and the estimated cost of each of the elements. It would be appropriate at this meeting to provide the owner(s) with a "Notice of Evaluation" or a "Notice of Presumption", unless it has been mailed previously. Examples of formats for these notices are provided on pages 22 and 23.

The notice of evaluation, which must be provided to the occupant within 15 days of the evaluation or presumption and must include:

a. A summary of the nature, scope and results of the evaluation
b. A contact name, address and telephone number for more information
c. The date of the notice

Relocation plans or arrangements for remaining in the unit, access to the unit and belongings should also be thoroughly discussed.

6) Pre-Construction Conference

At the time of the pre-construction conference, the final costs should be known and the HUD Rehabilitation Cost Computation Worksheet should be revised as needed to confirm that the project meets the threshold for the HUD category as discussed under 4 B above.

Any relocation plans should be reviewed and specific dates should be worked out between the homeowner and the contractor. Issues of restricted access to the unit (or parts thereof) and contents should be reviewed once again.

7) Interim Inspections

The program should regularly perform interim inspections and site visits to assure that the contractor and his employees are following correct procedures, and should more frequently visit contractors who are new to the program, recently trained on lead hazard mitigation or have had any issues in the past, such as failure to pass clearance tests. It is recommended that the program establish a requirement that the contractor notify the program at least 48 hours before the project initially begins, so the inspector will know the project is underway. The program may also require the contractor to maintain a list of lead certifications of each employee at the job site so this can be checked during an interim inspection.

An example of an interim inspection form for lead-based paint projects is provided on page 21. This should be filled out during the inspection and placed in the program files, and, if there are issues or problems noted, copied to the contractor's information file. Depending on the violation or issue, a letter may need to be sent to the contractor or a meeting may need to be held with staff to resolve issues. Documentation is important if the contractor needs to be suspended or barred from participation in the program.

8) Final Inspection

The final inspection should probably be performed prior to the clearance examination because any "punch out" rehab items may disturb a lead based painted surface and a re-cleaning and testing may be needed for the unit or area. At the final inspection (or no later than 15 days after hazard reduction activities have been completed), a Notice of Hazard Reduction must be provided (see page 24)

Attachments and Exhibits

Example

Project:_____Date:_____

Staff:_____

Exemptions:

Before undertaking a housing activity, it is important to know which activities fall outside of the HUD regulations on lead-based paint. Some of the most common exemptions are:

- ☐ Units built after January 1, 1978
- ☐ Any rehabilitation that does not disturb a painted surface. Note that any disruption of a painted surface, no matter how small, requires that the activity follow the HUD regulations.
- ☐ A zero-bedroom unit including Single Room Occupancy (SRO) units.
- ☐ Units found not to have lead based paint based on a lead inspection, or properties where lead based paint has been removed and the property has been cleared.
- ☐ An unoccupied dwelling unit or property that will remain unoccupied until demolition. The regulation does not apply to demolition, but parties planning demolition should determine whether other Federal, State or local environmental requirements apply. Federal Occupational Safety and Health Administration (OSHA) standards (or, where applicable, State or local occupational safety and health standards) must be observed It is possible that lead hazards may be generated in the act of demolition of residential properties with lead-based paint. Soil remediation following demolition depends on the level of lead in the soil and the planned reuse of the site (e.g., whether residential or another use, and whether the soil will be covered). Remediation of lead-contaminated soil may be required by other environmental laws and regulations.
- ☐ Property not used for human residential habitation, except residential uses in mixed-use facilities.
- ☐ Housing for elderly or disabled persons, if such properties are designated exclusively for use by such persons and if a child less than 6 years of age is not expected to reside in the unit. This would include retirement communities or similar types of housing reserved for households of one or more persons 62 years of age or more, or other age if recognized by a specific federal housing assistance program. A person with a disability is defined in the Americans with Disabilities Act (ADA) and the Rehabilitation Act of 1973 as any person who has a physical or mental impairment that substantially limits one or more major life activities, has a record of an impairment, or is regarded by others as having such an impairment. It is not necessary that the lease or residency agreement include these precise definitions. The lease or other residency agreement should so state. Properties merely occupied by an elderly or disabled person are not exempt.

- ☐ Emergency repairs necessary to address dangers to life, health or safety or to protect property from further structural damage (generally limited to a single repair) except occupants need to be protected from exposure to dust and debris as much as possible. A repair that stems from deferred maintenance and has existed for weeks or months is not an emergency repair.

- ☐ Emergency rental or foreclosure prevention assistance, except that the exemption is only good for 100 days after the initial assistance is provided.

U.S. ENVIRONMENTAL
PROTECTION AGENCY
WASHINGTON, D.C. 20640

U.S. DEPARTMENT OF HOUSING
AND URBAN DEVELOPMENT
WASHINGTON, D.C. 20410-3000

APR 19 2001

Dear Colleague:

This letter clarifies the Title X requirements for rehabilitation and lead hazard reduction in property receiving up to $25,000 per unit in Federal rehabilitation assistance under regulations issued by the Department of Housing and Urban Development (HUD). This letter also clarifies the definition of "abatement" under regulations issued by the Environmental Protection Agency (EPA) and HUD. Both agencies issued their regulations under the authority of Title X of the 1992 Housing and Community Development Act, which among other things amended the Toxic Substances Control Act. EPA and HUD are working together to ensure that these two regulations complement each other to ensure that children are protected from lead-based paint hazards.

EPA is authorized to set minimal standards for all lead-based paint abatements, inspections, and risk assessments. This includes establishing training and certification requirements and work practice standards for individuals and firms engaged in those activities, and developing hazard standards. While EPA regulations do not mandate abatement, they require that whenever abatement activities occur by design, they be performed by certified personnel. EPA also authorizes states and tribes to operate their own training and certification programs to address inspections, risk assessments, and abatement if they demonstrate that they are at least as protective as the EPA program and provide for adequate enforcement. Because authorized state and tribal programs may differ from the EPA training and certification program, individuals and firms working in these areas must check with the authorized state or tribe to ensure compliance with those requirements. Local jurisdictions may also have requirements for lead hazard control.

HUD is authorized to require lead-based paint hazard control measures in federally-assisted housing, community development, and loan guarantee programs, and to provide grants to address lead-based paint hazards in low-income, privately-owned dwelling units. HUD's Lead Safe Housing Rule, also issued under the authority of Title X, requires that each recipient of Federal rehabilitation assistance less than $25,000 per unit must reduce lead-based paint hazards, through either interim controls or, if desired, abatement (this does not include public housing authorities conducting modernization). With limited exception, recipients conducting Federally assisted rehabilitation of more than $25,000 per unit must abate lead-based paint hazards.

Pursuant to Title X, both EPA's and HUD's regulations define abatement generally as any measure or set of measures *designed* to permanently eliminate lead-based paint hazards, including occupant protection and safe work practices. Whenever activities intended to permanently eliminate lead hazards are being conducted, EPA and HUD consider such activities

to be abatement. Under HUD's Lead Safe Housing Rule, intention to conduct abatement would, in virtually all circumstances, be established when HUD regulations require abatement, when abatement is specified in work specifications, job write-ups, cost allocation, or similar documents, or when abatement is expressly ordered by a responsible state or local agency or court order. HUD regulations require abatement during modernization of conventional pre-1978 family public housing developments (regardless of funding level), conversions, and for housing rehabilitation programs funded through the HUD Office of Community Planning and Development when Federal rehabilitation assistance exceeds $25,000 per unit.

EPA's regulations at 40 CFR Part 745.223 exclude from abatement "renovation, remodeling, landscaping or other activities, when such activities are not *designed* to permanently eliminate lead-based paint hazards, but, instead, are designed to repair, restore, or remodel a given structure or dwelling, even though these activities may incidentally result in a reduction or elimination of lead-based paint hazards" (emphasis added). When the primary purpose of work is rehabilitation or weatherization, EPA and HUD do not consider such activities to be abatement. The presence of a lead inspection or risk assessment report or the presumption of the presence of lead-based paint does not trigger federal abatement requirements or automatically change a housing rehabilitation project into an abatement project. Similarly, the use of specific work practices, such as window replacement, does not by itself change a rehabilitation project into an abatement project. On the other hand, even if a housing unit's Federal rehabilitation assistance is less than $25,000, activities expressly intended to permanently eliminate lead hazards are considered abatement. For example, if a cost allocation document subtracts the cost of window replacement from the hard cost of rehabilitation as a lead-based paint hazard reduction measure, the window removal is considered to be abatement. Any other building component replacement, enclosure, or encapsulation measure intended to permanently eliminate a lead-based paint hazard, particularly as documented in regulation, project specifications, cost allocation document, or court or agency order is abatement.

For paint repair and rehabilitation activities in properties receiving less than $25,000 in federal rehabilitation assistance, HUD regulations require occupant protection, the use of workers trained in lead-safe work practices and clearance testing whenever more than de minimis amounts of paint are disturbed. Occupant protection is a required element of all federally-assisted rehabilitation projects covered under Subpart J of the HUD regulation, regardless of funding level, because occupant protection is a requirement under lead-safe work practices (see 24 CFR 35.1350(b) and 24 CFR 35.1345). While EPA does not currently regulate remodeling or renovation activities, both EPA and HUD support the use of lead-safe work practices for all rehabilitation and paint repair activities involving surfaces that may contain lead-based paint. HUD has adapted EPA's one-day training courses to address the requirements of HUD's Lead Safe Housing Rule and HUD is working to make its courses widely available for those subject to HUD's rule (see www.hud.gov/offices/lead for a schedule of course offerings).

HUD will enforce its requirements. Those who believe HUD's lead-based paint

regulations are being violated should send a written complaint and supporting documentation to:

John P. Kennedy
Associate General Counsel for Finance and Regulatory Enforcement
U. S. Department of Housing and Urban Development
451 Seventh St., SW
Washington, DC 20410

When fully implemented, these requirements will help to ensure that every child living in federally-assisted housing will have a lead-safe home.

William H. Sanders, III, Director
Office of Pollution Prevention and Toxics
U.S. Environmental Protection Agency

David E. Jacobs, Director
Office of Healthy Homes and Lead Hazard Control
U.S. Department of Housing and Urban Development

Example of Computation of Rehabilitation Costs

Item	Rehab Cost Estimate	Rehab Assistance Amount (Based on Section 35.915)	Excluded Lead Hazard Reduction Costs
Roof	$4,500	$4,500	
Replace 10 windows	$4,000	$4,000	
Replace Kitchen floor/subfloor	$1,500	$1,500	
Replace Front Steps and Walk	$1,500	$1,500	
Repair foundation wall	$1,200	$1,200	
Plumbing	$3,500	$3,500	
Electric	$2,500	$2,500	
HVAC	$2,800	$2,800	
Risk Assessment	$1,200		$1,200
Interim Controls	$8,000		$8,000
Covering Furniture	$500		$500
Cleaning	$500		$500
Clearance Examination	$500		$500
Relocation (14 days @ $150/day)	$2,100		$2,100
Total Rehab Project Cost =	$34,300	$21,500	$12,800

Why isn't this a lead-hazard reduction cost? Because the windows are being replaced (in a lead-safe manner) based on the rehab inspection, which determined that they were defective, not weather-tight, and repair would not be cost-effective. The work would still have to be done by lead-safe renovators using safe work practices. However, if the only basis for removal is that they were identified as a lead hazard in a Risk Assessment, it would mean they are being replaced because the intent was to address a lead hazard, which then classifies them as abatement items, and a licensed abatement contractor would need to do the removal (per HUD-EPA 4/19/01 letter). EPA regulations define the removal of components to mitigate lead hazards as abatement - the intent here is rehabilitation.

Interim Control Measures:

Stabilize paint on 12 interior doors, and rehang to prevent abrasion

Plane kitchen cabinet doors drawers at impact points, paint, install felt bumpers, and rehang / reinstall.

Stabilize paint on baseboards in living room, hall, and 4 bedrooms and repaint

Remove carpeting in living room and children's bedrooms.

Clean carpet in other bedrooms

Repair damaged substrate in bathoom, and repaint surface.

Cover stair risers with luan mahogany and paint

Cover bare soil area in rear yard

Clean horizontal surfaces with a HEPA vacuum

Cover window sill in childrens bedrooms to prevent chewing of painted surface

Example

Rehabilitation Cost Computation Worksheet

Project:_____ Preliminary:____ Final ____

Fill in the information requested in the form below. The amount on line "E" is the figure to be used to determine rehabilitation costs per Subpart L. This data may need to be updated when project costs are definite.

A. Total Project Cost: $_____

B. Non-federal amount: ($_____)

C. Federal Project Cost: $_____

D. Minus Cost of lead Hazard mitigation and Related Costs: ($_____)

Inspection /Risk Assessment: $_____

E. Total Housing Rehabilitation Costs (35.915) $_____

Covering Furniture: $_____

Specialized Cleaning: $_____

Clearance Examination: $_____

Relocation: $_____

Interim Controls* $_____

Abatement*: $_____

Other**:_____ $_____

Subtotal Lead Mitigation Costs: $_____

*Lead Hazard Controls should be identified on the work specifications or on a separate attached list.

**Other items be directly related to the required lead hazard control work, and allowed by the HUD regulations.

Terms and Conditions

Example

Personal Belongings must be put away in drawer or box or other container to keep them dust free during rehabilitation. Any items you will need while the rehabilitation work is in process should be taken with you.

Occupants will not have access to unit or particular areas of the dwelling unit, personal belongings or furniture during rehabilitation while lead hazards are being addressed.

Owner-occupants must make arrangements for arranging and paying for alternative housing during the rehabilitation and hazard mitigation work, unless otherwise provided by the program. In some cases the work may be done while the occupants reside in designated areas of the unit free from dust, if this is necessary, but in many cases this may not be possible.

Owners of rental property can temporarily relocated tenants to a suitable alternative dwelling, but the relocation costs will need to be paid by the owner. A relocation plan will be developed in conjunction with the housing program staff prior to the project and communicated to the tenants by the owner.

Once lead-based paint or hazards are identified in the unit, the owner will be required to disclose this information upon sale or rental of the unit, according to the forms provided.

Interim Control measures will be applied to eliminate or reduce lead dust to safe levels, but some lead will remain in your house. Intact lead surfaces are not a hazard. You will be provided with a report as to where the lead has been identified. It is your responsibility to monitor those surfaces and maintain them so lead hazards do not reoccur. Any surface with lead-based paint that is damaged or substantially disrupted should be repaired by a trained Lead-Safe Renovator.

I have received, read and understand these terms and conditions and the EPA Pamphlet on "Protect Your Family From Lead in Your Home".

Signed:_____ Date:_____

_____ Date:_____

Interim "Lead" Inspection Report

Type of inspection: Lead work in progress

Home Owner: _____ Date of Inspection: _____

Address: _____

The following items were observed during my site visit, check (X) if yes.

☐ Qualified Lead Safe supervisor on the job site
or
☐ Licensed Lead Workers on job site

Example

☐ Signs posted

☐ Protected sheeting on floor, as required

☐ Containment Procedures (barriers to contain dust, windows closed, furnace ducts covered, etc)

☐ Restricted Access

☐ Furnishing removed/covered in work area

☐ Mist water sprayer

☐ Worker safety (safe work practices)

☐ No Prohibited methods (no machine or dry sanding or grinding, sandblasting, heat gun above 1,000deg., paint stripping in poorly ventilated area, etc).

☐ Handling and removal of debris

☐ Specialized cleaning: (cleaning and using HEPA vacuum)

Follow up Required: YES / NO

Comments:_____
_____
_____
_____
_____
_____

Use back of page for additional.

Contractor's Signature: _____ Date_____

Rehab Inspector: _____

Owner Name
Address
City, State, ZIP

Example

Subject: Notification of Evaluation

Recently you applied for housing rehabilitation assistance for your residential property located at _____. Regulations governing our program require that we inspect residential properties for the presence of lead-based paint. The property, including the dwelling unit, the surrounding land, outbuildings, fences, and play equipment affixed to the land has been inspected for lead-based paint. The inspection has determined that:

____ The property does contain lead-based paint
____ Some of the surfaces that contain lead-based paint are considered hazardous

This notice is being provided to you as required by program regulations to inform you that this inspection has taken place. Our program staff will set up a meeting with you soon to review the results of the inspection report, and to discuss the next steps in processing your request for housing rehabilitation assistance, including addressing the lead-based paint hazards that have been identified by the inspection.

You do not need to take any action at this time. Do not attempt to make any repairs yourself or disturb any painted surfaces, as this could actually create hazards or worsen existing hazards. If hazards have been identified and if you have children under six years of age, you can help lower lead dust levels by wiping down window sills and mopping floor areas by windows where children might play, regularly wiping dust from toys or other objects that the child might place in its mouth, and seeing that the child's hands are washed frequently.

For more information on this notice or to obtain a copy of the actual evaluation, you may write _____at _____, or call _____.

Sincerely,

Owner Name
Address
City, State, ZIP

Example

Subject: Notification of Presumption

Recently you applied for housing rehabilitation assistance for your residential property located at _____. Regulations governing our program require that we inspect residential properties for the presence of lead-based paint or presume that lead-based paint is present. If a presumption is made rather than an inspection, then all surfaces will need to be treated as if they contained lead-based paint. In some cases, this may involve more extensive work being performed than if an inspection and risk assessment had been performed. After visiting the property and discussing the matter with you, our inspector has determined that a presumption of lead based paint is appropriate for this property for the following reasons:

____ The property is in relatively good condition and was built after 1960
____ The property has already undergone significant alterations, which have reduce the number of possible impact and friction surfaces that create lead-based paint hazards.

Therefore, this notice is being provided as required by program regulations to inform you that the property, including the dwelling unit, the surrounding land, outbuildings, fences, and play equipment affixed to the land is presumed to contain lead-based paint. Our program staff will set up a meeting with you soon to discuss the next steps in processing your request for housing rehabilitation assistance, including addressing the presumed lead-based paint hazards.

You do not need to take any action at this time. Do not attempt to make any repairs yourself or disturb any painted surfaces, as this could actually create hazards or worsen existing hazards. If hazards have been identified and if you have children under six years of age, you can help lower lead dust levels by wiping down window sills and mopping floor areas by windows where children might play, regularly wiping dust from toys or other objects that the child might place in its mouth, and seeing that the child's hands are washed frequently.

For more information on this notice or to obtain a copy of the actual evaluation, you may write _____at _____, or call _____.

Sincerely,

Owner Name_____
Address_____
City, State, ZIP_____

Subject: Notification of Hazard Reduction Activity

The federal regulations of the U.S. Department of Housing and Urban Development (HUD) require that a notice be provided to occupants within 15 day of the completion of hazard reduction activities have been completed. The notice includes the following elements:

1. Summary of the nature, scope of the hazard reduction activities

   Lead hazard controls were applied in conjunction with housing rehabilitation activities to the property located at _____ . This work was performed by _____ _____and included the following Interim Control measures:

   __ All physical defects in the substrate of a painted surface or component were repaired so the surface could be treated.

   __ Loose paint and other loose material was removed from the surface to be treated.

   __ Paint stabilization, including the application of a new protective coating or paint was applied to defective surfaces.

   __ Friction and impact surfaces were treated to prevent abrasion, which can create lead dust.

   __ Chewable surfaces (where evidence shows that a child less than 6 has chewed on the painted surface) were made inaccessible.

   __ Dust lead-hazard controls were applied, including a thorough cleaning of all horizontal surfaces, and porous surfaces were covered with a smooth covering or an appropriate material.

   __ Soil lead hazards were addressed by the application of impermanent surfaces or land use controls.

2. A copy of the clearance report for the hazard reduction activities

   See attached copy of the Clearance Report.

3. Information on the location of lead-based paint in the rooms or areas where hazard reduction activities were conducted on a surface-by-surface basis.

   See attached copy of the work specifications that identifies the work elements that involve lead hazard controls on a surface-by-surface and room-by-room basis.

4. Contact information for the contractor is provided below, and contact information is also listed for the program that provided inspection and oversight of the hazard reduction activities.

Contractor:

Name:_____
Address:_____
City: _____State:_____Zip:_____
Phone:_____

Program Staff:

Name: _____
Address:_____
City: _____State:_____ Zip:_____
Phone:_____

Disclosure of Information on Lead-Based Paint and/or Lead-Based Paint Hazards

Lead Warning Statement

Every purchaser of any interest in residential real property on which a residential dwelling was built prior to 1978 is notified that such property may present exposure to lead from lead-based paint that may place young children at risk of developing lead poisoning. Lead poisoning in young children may produce permanent neurological damage, including learning disabilities, reduced intelligence quotient, behavioral problems, and impaired memory. Lead poisoning also poses a particular risk to pregnant women. The seller of any interest in residential real property is required to provide the buyer with any information on lead-based paint hazards from risk assessments or inspections in the seller's possession and notify the buyer of any known lead-based paint hazards. A risk assessment or inspection for possible lead-based paint hazards is recommended prior to purchase.

Seller's Disclosure

(a) Presence of lead-based paint and/or lead-based paint hazards (check (i) or (ii) below):

(i) _____ Known lead-based paint and/or lead-based paint hazards are present in the housing (explain).

_____

(ii) _____ Seller has no knowledge of lead-based paint and/or lead-based paint hazards in the housing.

(b) Records and reports available to the seller (check (i) or (ii) below):

(i) _____ Seller has provided the purchaser with all available records and reports pertaining to lead-based paint and/or lead-based paint hazards in the housing (list documents below).

_____

(ii) _____ Seller has no reports or records pertaining to lead-based paint and/or lead-based paint hazards in the housing.

Purchaser's Acknowledgment (initial)

(c) _____ Purchaser has received copies of all information listed above.

(d) _____ Purchaser has received the pamphlet *Protect Your Family from Lead in Your Home.*

(e) Purchaser has (check (i) or (ii) below):

(i) _____ received a 10-day opportunity (or mutually agreed upon period) to conduct a risk assessment or inspection for the presence of lead-based paint and/or lead-based paint hazards; or

(ii) _____ waived the opportunity to conduct a risk assessment or inspection for the presence of lead-based paint and/or lead-based paint hazards.

Agent's Acknowledgment (initial)

(f) _____ Agent has informed the seller of the seller's obligations under 42 U.S.C. 4852(d) and is aware of his/her responsibility to ensure compliance.

Certification of Accuracy

The following parties have reviewed the information above and certify, to the best of their knowledge, that the information they have provided is true and accurate.

Seller	Date	Seller	Date
Purchaser	Date	Purchaser	Date
Agent	Date	Agent	Date

Appendix 7 – B

Contractor Occupant Protection Plan/Risk Analysis

Occupation Protection Plan shall include the following items for approval by licensed lead risk assessor, rehab specialist, and home owner. A copy of this plan will be kept in project file.

1. Listing of children under the age of six by name and age.

2. Blood testing date and results, if testing performed on above listed children.

3. Itemization of lead work required and identified as interim control or abatement, whole house or limited area. Itemization list should be in schedule form with estimated time in each area.

4. Determination by contractor if relocation is a requirement. If required, list period of time estimated to complete work and obtain clearance.

5. Determination if program will provide assistance with relocation. It will have to be decided on a unit-by unit basis what will work for relocation. Because the housing rehabilitation program is voluntary, the program can require that homeowners with sufficient resources or with willing family or close friends in the area that have adequate accommodations during the rehabilitation and lead hazard mitigation work.

6. Upon completion of work, plan will be signed and dated by contractor, rehab specialist, lead risk assessor, and homeowner as well as attached copy of lead clearance report.

Contractor Occupant Protection Plan/Risk Analysis

Determination of interim inspections required is based upon the scope and length of time estimated to complete LBP hazard control work. OHCP requires a minimum of one interim inspection to be completed weekly based upon the estimated time frame for completion/clearance listed below.

Contractor Name: _____

Project Site Address: _____

_____

Listing of all children less than six (6) years of age:
(Include Lead Blood Level Testing Results if tested within past six (6) months

Name	Age	Results
_____	_____	_____
_____	_____	_____
_____	_____	_____
_____	_____	_____
_____	_____	_____
_____	_____	_____

Itemization of Lead Work Required: (By specification Number)

Interim Control Measures

_____
_____
_____
_____
_____
_____
_____

Lead Abatement Measures: (By specification Number)

_____
_____
_____
_____
_____
_____
_____

Estimated time frame for completion /clearance of LBP measures:

Interim Controls _____

Abatement _____

Is Relocation Required? Yes No

If Yes, does home owner have means to be responsible for relocation?

Yes No

If No, describe plan for relocation, including funding sources and limits.

_____
_____
_____
_____
_____
_____

The general contractor shall ensure that all lead hazard control work is performed by qualified individuals and that all work is performed in a lead safe manner.

I have read, understand, and approve of the above listed plan:

Contractor: _____

Lead Risk Assessor: _____

Home Owner: _____

Rehab Specialist: _____

Appendix 8 – A

SUMMARY OF INSPECTION AND TESTING REQUIREMENTS

This appendix lists eight specialized, but routine, inspections and tests that the RRS requires. This list is provided as a reference and it is not intended to outline all of the inspections which may be needed to thoroughly assess a rehabilitation project.

1. Wood-boring Insect Infestation and Damage

   Each building shall be inspected for evidence of wood-boring insect infestation and damage.

2. Well Water Quality

   If potable water is supplied by a private well located on the premises, the quality of the water must be tested by the local health department or other qualified source. At a minimum, the test must determine if the bacterial content of the water is within safe limits.

3. Private Septic System

   If sewage is treated by a private septic system located on the premises, the septic system must be inspected by the local health department or other qualified source. The inspection must determine if the system is adequate, functional and properly treating the discharged waste.

4. Plumbing System

   The plumbing system (including the water supply lines and the drain, waste and vent lines) shall be inspected for evidence of leaks, hazardous conditions, improper materials, improper installations, inadequate service and other existing or incipient conditions needing repair or improvement. The inspection must also assess the condition and adequacy of the plumbing fixtures and plumbing appliances.

5. Electrical System

   The electrical system (including the exterior service, service entrance, service panel and premises wiring) shall be inspected for evidence of hazardous conditions, improper materials, improper installations, inadequate service and other existing or incipient conditions needing repair or improvement. The inspection must include a load calculation and determine the number of circuits required.

6. Space Heating Equipment

   The space equipment, including the fuel/power source, the venting system and the heat distribution system, shall be inspected for evidence of hazardous conditions, improper materials, improper installations and other conditions or problems needing repair or improvement.

If the equipment is to be replaced, the inspection must include a heat load calculation to size the new equipment. If fuel-fired equipment is not to be replaced, the inspection must include flue gas measurement and stack temperature tests to determine combustion safety and efficiency. Flue gas analysis shall be performed on all new gas fired and oil fired units installed.

7. Water Heating Equipment

The water heating equipment, including the venting system, shall be inspected for evidence of hazardous conditions, improper materials, improper installations and other conditions or problems needing repair or improvement. If equipment is to be replaced, the inspection must include a calculation to size the new equipment. The inspection must include flue gas measurement and stack temperature tests to determine combustion safety, draft, and efficiency.

8. Fuel-gas Piping

If fuel-gas (i.e. natural gas or LPG) is used, the lines shall be inspected for evidence of hazardous conditions, improper materials and improper installations. Also, the lines shall be tested for leaks using a combustible gas leak detector.

Appendix 8 – B

ABBREVIATIONS

ACCA	Air Conditioning Contractors of America
ANSI	American National Standards Institute
ASHRAE	American Society of Heating, Refrigeration & Air Conditioning Engineers
ASSE	American Society of Safety Engineers
ASTM	American Society for Testing and Materials
BOCA NPMC	Building Officials & Code Administrators of America, National Property Maintenance Code
CABO	Council of American Building Officials, One and Two Family Dwelling Code
CABO MEC	Council of American Building Officials, Model Energy Code
CSA	Canadian Standard Approval
EPA	Environmental Protection Agency (includes federal and state agencies)
FEMA	Federal Emergency Management Agency
GAMA	Gas Appliance Manufacturers Association
HUD	U.S. Department of Housing and Urban Development
NFPA	National Fire Protection Association
ODH	Ohio Department of Health
OHCP	Office of Housing & Community Partnerships
OHPO	Ohio Historic Preservation Office
OPC	Ohio Plumbing Code
OSHA	Occupational Safety & Health Administration
RCO	Residential Code of Ohio
UFAS	Uniform Federal Accessibility Standards
UL	Underwriter's Laboratory

APPENDIX 8 - C

DEFINITIONS

Attic	That portion of a building which is between the roof and the ceiling of the top floor. In 1 1/2 story buildings, the attic includes the area behind the knee wall.
Basement	That portion of a building which is partly or completely below grade. Basements are enclosed by the foundation walls and may be habitable or inhabitable. In general, basements have sufficient headroom to enter and move about.
Bathroom	A room containing plumbing fixtures including a bathtub, shower or combination bathtub/shower. In most single-family residential dwellings, the bathroom will also contain a toilet (water closet) and a lavatory. However, in the context of the RRS, a room containing a toilet and a lavatory (i.e. a "toilet room") shall also be considered a bathroom.
Bedroom	A room designated for sleeping. In most single family residential dwellings, bedrooms are separate rooms used exclusively for sleeping. However, in the context of the RRS, other habitable rooms (e.g. living room, dining room, parlor, den, etc.) which are used for sleeping shall be considered bedrooms.
Blower Door	A calibrated device consisting of a high velocity fan, pressure sensitive gauges and a simple computer used to pressurize (or de-pressurize) a dwelling and therefore quantify and locate air movement.
Building	The structure containing the dwelling or dwellings and the common areas within the structure.
Building Shell	The building's wall, ceiling and floor assemblies that make up the exterior boundaries. Regarding energy efficiency measures, the building shell refers to the boundaries between the conditioned and unconditioned spaces (i.e. thermal boundaries).
Cellar	A basement space which is unfinished and uninhabitable. In many cases, cellars have dirt, stone or brick floors.
Combustion Equipment	Equipment or appliances that produce heat by the on-site burning of gaseous, liquid or solid fuel. Examples of combustion equipment include; furnaces, space heaters, fireplaces, water heaters, ranges, cook top stoves and clothes dryers. Combustion equipment may also be referred to as fuel-burning equipment.

Conditioned	Those portions of a building in which the air is heated (or cooled) to maintain comfort for the occupant and/or to protect the building's systems, such as protecting water lines from freezing. In the context of the RRS, conditioned spaces are generally spaces which are intentionally heated (or cooled) and therefore are within the building's thermal boundary. Spaces which are unintentionally conditioned, such as a furnace room or a basement with ducts running through it, shall be considered unconditioned.
Crawlspace	The space between the floor of the building and the grade below. Crawlspaces may be enclosed by the foundation walls or open the outside.
Direct-Vent Equipment	High energy efficient space and water heating equipment that, with the aid of draft inducing fans, receive combustion air directly from the outside, burn fuel within a sealed combustion chamber and vent combustion by-products horizontally through the sidewall.
Dwelling or Dwelling Unit	A single unit providing complete independent living facilities for one or more persons including permanent provisions for living, sleeping, eating, cooking and sanitation.
Electrical System	In the context of the RRS, the electrical system shall include all components of the dwelling and premises wiring system, from the load end of the service drop (or underground lateral) to the receptacle or fixture. This includes the service entrance, the service panel and over-current protection devices, the wiring circuitry and the fixtures.
Functional	In the context of the RRS, functional means that a thing operates or fulfills the purpose for which it was designed and intended. Functional implies that the thing is in good repair and works without problems.
Fuel-Burning Equipment	See "combustion equipment". Generally refers to furnaces and water heaters.
Habitable Space	Space within a dwelling designated for living, sleeping, eating or cooking. Bathrooms, toilet rooms, closets, storage or utility rooms, halls, and similar spaces are not considered habitable spaces.
Heating Distribution System	The ducts or piping which conduct the heated air or fluid from the heating equipment to the space and back to the heating equipment. Warm-air distribution systems include the plenum, supply and return ducts, connectors, the fan and air handler components, registers and dampers. Hydronic distribution systems include supply and return piping, connectors, pumps, valves, expansion tanks and radiators.

Heating Equipment	In the context of the RRS, heating equipment refers to appliances designed and used exclusively for heating the space within the dwelling. Examples include furnaces, space heaters, boilers and baseboard heaters. Heating equipment may be fuel-burning or electric and stationary or portable. Other appliances that produce heat, but are not designed for space heating, such as kitchen ranges and cook top stoves, are not considered heating equipment.
Hydronic System Kitchen	Hot water or steam heating equipment and distribution system. A room designated for preparing food. In most single-family residences, a kitchen is a separate room or distinct part of a room used exclusively for cooking. In the context of the RRS, a kitchen must have adequate space for a cooking appliance and a refrigerator, a sink and adequate storage and counter top space.
Knee wall	A short stud wall connecting the floor and the roof framing members which separates a room from an attic area.
Occupiable Space	Space within a dwelling other than that designated for living, sleeping, eating or cooking. Occupiable spaces include areas such as bathrooms, toilet rooms, closets, halls, storage and utility rooms.
Primary Heating Equipment	Heating equipment used as the main source for space heating. Generally, primary heating equipment is permanent and stationary. Portable space heaters are generally secondary heat sources used as back up or in emergencies.
Plumbing System	In the context of the RRS, the plumbing system shall include all components of the water supply and sanitary disposal system in the dwelling unit and on the premises. The water supply system includes the supply (if a well is present), supply piping, connectors, water heater, valves and fixtures. The sanitary disposal system includes the drain, waste and vent pipes, traps, sewer connections and septic (if present).
Qualified Person	Person demonstrating the knowledge, skill and experience required to perform the work in accordance with the RRS or referenced code. Regarding electrical, plumbing and HVAC work, qualified may also mean a person who is certified or licensed, or whose primary occupation is in those residential trades.
Unconditioned Space	Those portions of a building which are not heated (or not cooled). In the context of the RRS, these areas are generally those which are intentionally not heated (or cooled).

Unhabitable Space	The spaces in a building or a structure on the premises which are not designed or built for habitation and therefore are inappropriate for residential living. Generally, unhabitable spaces are outside of the dwelling's thermal boundaries. Examples of unhabitable spaces include; unfinished attics, basements, crawlspaces, garages, porches, sheds and other out-buildings.
Vapor Retarder	A material that retards the passage of water vapor. Vapor retarders must have a permeance rated at not greater than 1 perm. Commonly used vapor retarders include, 6 mil polyethylene sheeting and specialty paints.

2008
Residential Rehabilitation Standards
Index

Topic/Measures	Chapter Section	Page
Administration		
Classification of Measures	1.7	8
Completion of Measures	1.2.2.2	4
Intent of the RRS	1.1	1
Enforcement	1.4	7
Scope	1.7.1	8
Accessibility		
General Requirements	6.5	89
Bathroom	6.4.2	88
Air Movement		
Air Sealing	2.5.2.2	25
Air Movement	2.6.3	27
Exhaust & Ventilation Fans	2.6.4	29
Asbestos		
Asbestos	6.7	91
Attic		
Access	2.5.3	25
Electrical Receptacles & Fixtures	Appendix 4-A	124
Insulation	2.6.5	30
Ventilation	2.5.2.1	24
Basement		
Foundation Walls	2.1.2	13
Bedrooms	6.3.1	86
Escape and Rescue Openings	6.6.1	89
Door & Windows	2.4	22
Electrical Receptacles & Fixtures	Appendix 4-A	124
Floors	2.1.8	17
Moisture Control	2.1.6	15

Bathroom

General Standards	6.4.2	88
Electric Receptacles & Fixtures	Appendix 4-A	124
Plumbing	5.3	73
Ventilation	2.6.4	29
Bathtub/Shower	5.3	73
Lavatories	5.3.1	73

Bedroom

General Standards	6.3.1	86
Basement Bedrooms	6.6.1	89
Electric Receptacles & Fixtures	Appendix 4-A	124

Cabinets (Kitchen)

Counter Top Space	6.4.1	87

Chimneys & Fireplaces (Solid Fuel)

General Standards	3.1	38
Inspection	3.2	38

Chimneys & Fireplaces (Fuel Gas)

General Standards	3.3	39
Inspection	3.2	38

Crawlspace

Foundation Walls/Piers	2.1	13
Access	2.1.5.1	15
Moisture Control	2.1.6	15
Ventilation	2.1.7	16
Floor Insulation	2.6.7	32
Perimeter Insulation	2.6.8	33

Decks/Porches	2.7	33

Doors (Exterior)

General Standards	2.4.4	23
Repair & Replacement	2.4.4	23

Doors (Interior)	2.4.5	23
Driveways	6.1.5	81
Drywall	2.3.6	21

Electrical System

General Requirements		50
Inspection	Appendix 4-A	124
Installation, Repair & Replacement	4.1.4	52
Existing Wiring & Fixtures	4.1.6	53
Material & Equipment	4.1.8	54
Exterior Wiring	4.1.8	54
Grounding	4.2	54
Service Entrance	4.3.2	56
Load Calculations	4.3.1	55
Sizing – Capacity – Load Calculation	4.3.3	56
Main Service	4.3.5	56
Over Current Protection	4.3.6	57
All Electric Homes	4.3.4	56
Sub-Panels	4.3.8	57
Branch Circuits	4.4	58
Dedicated Circuits	4.4.1	58
Load Distribution	4.4.2	59
Premises Wiring	4.5	59
Receptacles	4.6	61
Exterior Receptacles	4.6.8	63
GFCI Protected Receptacles	4.7	64
Smoke Detectors	4.9	66

Emergency Egress 6.6.1 89

Energy Efficiency

General Standards	2.6	26
Uncontrolled Air Movement	2.6.3	27
Attic Air Sealing	2.5.2.2	25
Heat Loss Calculation	Appendix 2-B	109
Ceiling Insulation	2.6.5	30
Floor Insulation	2.6.7	32
Foundation Insulation	2.6.8	33
Sidewall Insulation	2.6.6	31
Green Building	2.11	35

Fireplaces

Chimneys & Fireplaces	3.2	38

Fire & Carbon Monoxide Safety

Emergency Egress	6.6.1	89
Storing Flammable Materials	6.6.4	90
Installing Flammable Materials	6.6.5	91
Smoke Detectors	6.6.3	90
Carbon Monoxide Detectors	6.6.3	90

Flood Plain Management	6.9	93
Floors		
General Standards	2.2	18
Basement	2.1.8	17
Floor Coverings	2.2.5	19
Insulation	2.6.7	32
Foundations		
Replacement	2.1.1	13
Mortar Joints	2.1.2.4	14
Piers $ Columns	2.1.3	14
Access Doors	2.1.5	15
Grading & Moisture	2.1.6	15
Moisture Barriers	2.1.7.1	16
Vapor Barrier	2.1.8.3	18
Insulation	2.6.7	32
Fuel Gas Piping		
General Standards	3.9	48
Inspection & Testing	3.9	48
Piping, Connections, & Valves	3.9	48
Furnaces		
General Requirements		38
Source of Heat	3.1	38
Chimneys & Vents	3.3	39
Heating Equipment (All Fuels)	3.4	40
Combustion Safety	3.4.1	40
Sizing of Replacements	3.4.6	42
Combustion Air Requirements	3.4.11	43
Garages & Outbuildings		
Electrical Receptacles & Fixtures	Appendix 4-A	124
Existing Structures	6.1.2.1	79
New Structures	6.1.2.2	80
Repair	6.1.2.1	79
Grading		
Foundation/Site	6.1.2.2	80
Gutters & Downspouts	2.5.5	26

Habitable Rooms

General Standards	6.3	86
Receptacles & Fixtures	4.6	61
Ventilation	6.2.2	84
Occupancy Limitations	6.2.3	85

Habitable Spaces 6.3 86

Bedrooms	6.3.1	86
Other Habitable Spaces	6.3.2	87
Occupiable Spaces	6.4	87
Storage/Utility Rooms	6.4.3	88
Accessibility	6.5	89

Historic Preservation 6.8 93

HVAC Cooling Equipment

General Standards	3.6	44
Inspection	3.6.3	44
Replacement	3.6.2	44

HVAC Heating Equipment

General Requirements		38
Source of Heat	3.1	38
Chimneys & Vents	3.3	39
Heating Equipment (All Fuels)	3.4	40
Combustion Safety	3.4.1	40
Sizing of Replacements	3.4.6	42
Combustion Air Requirements	3.4.11	43
Equipment Inspections	3.5	43

Indoor Air Quality 6.7.2 91

Insulation 2.6.1 26

Pre-Existing Insulation	2.6.2	27
Attic Insulation	2.6.5	30
Sidewall Insulation	2.6.6	31
Floor Insulation	2.6.7	32
Perimeter Insulation	2.6.8	33

Kitchens

General Standards	6.4.1	87
Electric Circuits	4.4.1	58
Electric Receptacles & Fixtures	4.6.7	63
GFCI Protection	4.7	64
Fixture and Switch Location	4.8.2.1	65

Kitchens (continued)

Fixture Selection Energy Considerations	4.8.3	65
Food Preparation/Storage	6.4.1	87
Plumbing Supply	5.2	69
Supply Lines and Fixtures	5.2.4.2	71
Plumbing Fixtures	5.3.2	73
Sanitary Drainage	5.4	74
Traps	5.4.3	75
Vents	5.4.4	76

Laundry Room

Electric Circuits	4.4.1	58
Receptacles & Fixtures	4.6.7	63
GFCI Protection	4.7	64
Fixture and Switch Location	4.8.2.1	65
Fixture Selection Energy Considerations	4.8.3	65
Plumbing Supply	5.2	69
Supply Lines and Fixtures	5.2.4.2	71
Plumbing Fixtures	5.3.2	73
Sanitary Drainage	5.4	74
Traps	5.4.3	75
Vents	5.4.4	76
Lavatories	5.3.1	73

Lead Based Paint

General Requirements		95
General Conditions	7.1	95
Personnel	7.2	96
Qualifications	7.2.2	96
	7.2.3	96
Risk Assessments	7.3.1	97
	7.3.1.2	97
	7.3.1.3	97
Presumption	7.3.1.1	97
Clearance	7.3.2	98
Change Orders	7.3.4	99
Specifications	7.4	100
De-Minims Levels	7.4.3	102
Qualifications	7.5	102
Documentation	7.6	103

Lighting

General Requirements	6.2	84
Lighting Fixtures	4.8	64

Material Standards

New Materials	1.9.1	11
Used Materials	1.9.2	12

Modular, Manufactured, and Mobile Homes

General Requirements	2.10	35

New Construction

Dwellings & Room Additions	2.9	34
Overcrowding	6.2.3	85
Green Building	2.11	35

Occupiable Rooms/Spaces	6.4	87
Kitchens	6.4.1	87
Bathrooms	6.4.2	88
Storage/Utility Rooms	6.4.3	88
Accessibility	6.4.3	88
Egress	6.6.1	89
Painting (Exterior)	2.3.5	20
Painting (Interior)	2.3.6	21

Plumbing

General Requirements		67
Inspection/Repair Requirements	5.1	67
	5.1.2	68
	5.1.3	68
Water Supply	5.2	69
Water Quality	5.2.2	69
Hose Bibs	5.2.3.2	70
Water Pressure	5.2.4	70
Fixtures & Shut-Offs	5.2.5.2	72
Fixtures	5.3	73
Air Gaps	5.2.6	72
Piping Support	5.2.7	72
Dielectric Unions	5.2.8	72
Anti-Scald Valves	5.3.2	73
Sanitary Drainage	5.4	74
Traps	5.4.3	75
Vents	5.4.4	76
Air Admittance Valves	5.4.4 g	77

Porches & Uninhabitable Additions

General Standards	2.7	33
Repair or Removal	2.7	33

Premises & Property

General Conditions	6.1	78
Grading & Drainage	6.1.3	80
Paved Surfaces	6.1.5	81
Retaining Walls	6.1.6	81
Rubbish/Garbage	6.1.7	82
Trees & Shrubs	6.1.9	83
Garages/Outbuildings	6.1.2	79
Vermin & Materials	6.1.8	82
Finish Grade/Seed	6.1.9.2	83

Roofs	2.5.4	25
General Requirements	2.5.4.1	25
Flashings & Drip Edge	2.5.4.2	25
Gutters & Downspouts	2.5.5	26
Septic Systems	5.4	74
Approved Systems	5.4.1	74
Installation Details	5.4.2	75
Sidewalks	6.1.5	81
Siding	2.3.5	20
Sinks	5.2.5.2	72
	5.3	73
	5.3.1	73
	5.3.2	73
Smoke Detectors	4.9	66

Stairs

General Standards	2.8	34
Handrails	2.8.1	34
Guardrails	2.8.3	34

Structural Integrity

Foundations	2.1	13
Floors	2.2	18
Walls	2.3	20
Roofs	2.5	24
Notching for Electrical	4.1.7	53
Notching for Plumbing	2.2.3	19
Water Heaters	3.8	46
General Requirements	3.8.2	46
Inspection/Replacement	3.8.3	47
Water Supply	5.2	69
Water Quality	5.2.2	69