CINCINNATI WATER WORKS
STANDARD DRAWINGS

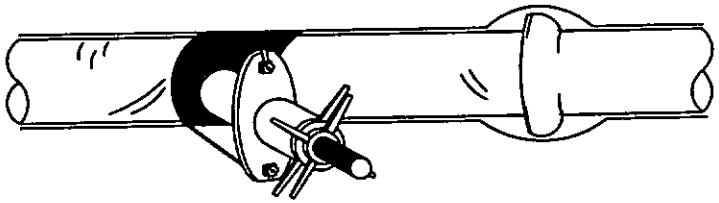

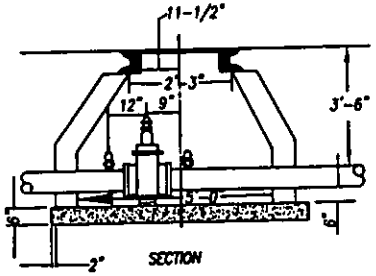

WATER
C W W

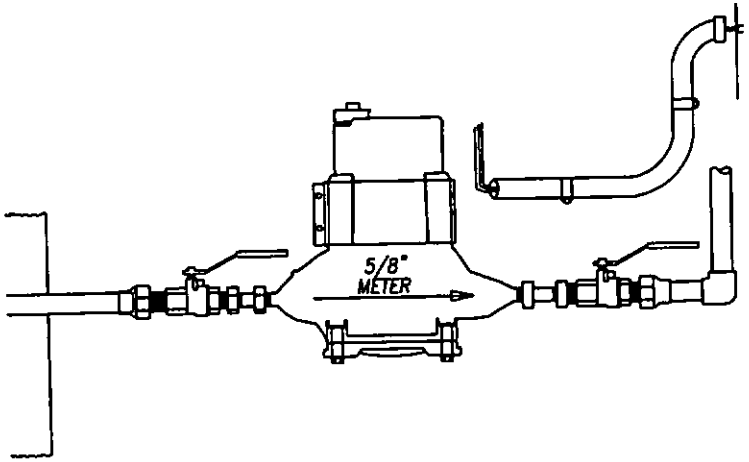

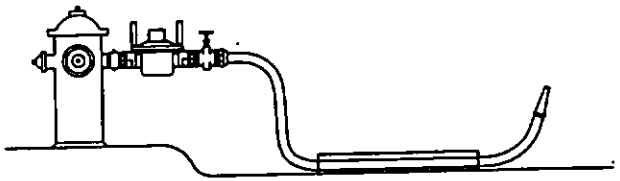

ENGINEERING DIVISION

PAUL E. TOMES, P.E. CHIEF ENGINEER

CINCINNATI WATER WORKS
STANDARD DRAWINGS INDEX

101 CONCRETE BLOCKING FOR CAST IRON FITTINGS
101-1 HORIZONTAL CAST IRON BENDS
101-2 BOTTOM VERTICAL CAST IRON BENDS
101-3 TOP VERTICAL CAST IRON BENDS
101-4 TOP AND BOTTOM VERTICAL BENDS-FULL ENCASEMENT
101-5 CAST IRON TEES
101-6 CAST IRON OFFSET BENDS
101-7 FIRE HYDRANT BLOCKING

102 CONCRETE BLOCKING FOR CONCRETE PIPE FITTINGS
102-1 CONCRETE PIPE HORIZONTAL BENDS
102-2 CONCRETE PIPE BOTTOM VERTICAL BENDS
102-3 CONCRETE PIPE TOP VERTICAL BENDS
102-4 CONCRETE PIPE TEES

103 FIRE HYDRANT SETTINGS
103-1 MEASUREMENTS
103-1A RETAINING WALL

104 WATER WORKS CHAMBERS
104-1 4" THRU 12" VALVE CHAMBERS
104-1A 4" THRU 12" VALVE CHAMBERS (PRECAST CONCRETE)
104-2 AIR COCK CHAMBERS
104-2A AIR COCK CHAMBERS (PRECAST CONCRETE)
104-3 6"-16" FLANGE OUTLET & TAPPING VALVE CHAMBER
104-3A 24"-36" FLANGE OUTLET & TAPPING VALVE CHAMBER
104-4 MANHEAD CHAMBERS
104-5A BUTERFLY VALVE CHAMBER POURED IN PLACE
104-5B BUTERFLY VALVE VAULT 16" PRE-CAST
104-6 12" VALVE CHAMBER FOR WATER PRESSURE OVER 100 P.S.I.
104-6A 12" VALVE CHAMBER FOR WATER PRESSURE OVER 100 P.S.I. (PRECAST CONCRETE)

105 DETAIL CONSTRUCTION STANDARDS
105-1 CREEK CROSSING
105-2 HIGHWAY AND RAILROAD CROSSINGS
105-3 WELDED TYPE TIED JOINT CONCRETE PIPE
105-4 EXCAVATION FOR WATER WORKS CONNECTION
105-5 POLYETHYLENE ENCASEMENT - GRAY AND DUCTILE IRON PIPE
105-5A TAPPING POLYETHYLENE ENCASED PIPE
105-6 2" COPPER PIPE INSTALLATION FOR CUL-DE-SAC
105-7 PRIVATE DEVELOPEMENTS ON PANHANDLE LOTS
105-8 AIR RELEASE ASSEMBLY STD. FOR WATER MAINS ON BRIDGES

106 BACKFILL
106-1 TYPICAL BACKFILL REQUIREMENT

107 SERVICE BRANCHES
107-1 SERVICE BRANCH INSTALLATION WITH CURB BOX
107-2 SERVICE BRANCH INSTALLATION WITHOUT CURB BOX

DATE: 12-7-96

CINCINNATI WATER WORKS
STANDARD DRAWINGS INDEX

108 METER SETTING

108-1	MATERIAL AND CONSTRUCTION SPECIFICATIONS FOR METER PIT CONSTRUCTION AND EMR REQUIREMENTS
108-2A	3/4" AND 1" SERVICE BRANCH WITH REMOTE METER SETTING
108-2B	3/4" AND 1" SERVICE BRANCH WITH SLAB REMOTE METER SETTING
108-2C	STANDARD 5/8" REMOTE / EMR INSIDE METER COUPLING SETTING DETAILS
108-2D	3/4" AND 1" REMOTE / EMR INSIDE METER COUPLING SETTING DETAILS
108-2E	INSIDE - 3/4" AND 1" SERVICE BRANCH WITH EMR METER SETTING
108-3	OUTSIDE FROST PROOF BOX METER SETTINGS 5/8" AND 3/4" METERS
108-3A	OUTSIDE FROST PROOF BOX METER SETTINGS FOR 1" METERS
108-3B	OUTSIDE FROST PROOF BOX METER SETTING FOR 5/8" - 2" EMR METERS
108-4	OUTSIDE METER SETTING FOR 1-1/2" AND 2" METERS
108-4A	INSIDE 1-1/2" AND 2" REMOTE / EMR METER SETTING DETAILS
108-5	PIPING ARRANGEMENT DOMESTIC METERS 3" AND LARGER
108-6	PIPING ARRANGEMENT DETECTOR CHECK VALVE
108-6A	BURIED PIPING ARRANGEMENT DETECTOR CHECK VALVE
108-7	PIT METER SETTING DOMESTIC METER 3" AND LARGER
108-7A	INSIDE EMR METER SETTING DOMESTIC 3" OR LARGER
108-7B	PIT EMR METER SETTING DOMESTIC METER 3" & LARGER
108-8	PIT DETECTOR CHECK VALVE SETTING - FIRE BRANCH ONLY
108-8A	BURIED - DETECTOR CHECK VALVE SETTING FIRE BRANCH ONLY
108-8B	INSIDE DETECTOR CHECK EMR METER SETTING FIRE BRANCH ONLY
108-9	PIT DUAL SERVICE BRANCH SETTING 2" & SMALLER DOMESTIC METER
108-9A	BURIED DUAL SERVICE BRANCH SETTING 2" & SMALLER DOMESTIC METER
108-9B	PIT - DUAL SERVICE BRANCH SETTING EMR DETECTOR CHECK & 2" & SMALLER DOMESTIC EMR METER
108-9C	BURIED DUAL SERVICE BRANCH EMR DETECTOR CHECK SETTING 2" & SMALLER DOMESTIC EMR METER
108-10	PIT - DUAL SERVICE BRANCH PIT SETTING 3" & LARGER DOMESTIC METER
108-10A	INSIDE DUAL SERVICE BRANCH 3" AND LARGER AND DETECTOR CHECK EMR METER
108-10B	PIT - DUAL SERVICE BRANCH - 3" AND LARGER AND DETECTOR CHECK EMR METERS
108-11	PIPING ARRANGEMENT DOMESTIC METERS 3" & LARGER WITH BACKFLOW PREVENTER
108-12	PIPING ARRANGEMENT DETECTOR CHECK VALVE WITH BACKFLOW PREVENTER
108-13	PIT - METER SETTING METERS 3" & LARGER WITH DOUBLE CHECK BACKFLOW PREVENTER
108-13A	INSIDE EMR METER 3" & LARGER WITH BACKFLOW PREVENTER
108-14	PIT - DETECTOR CHECK PIT SETTING FIRE BRANCH ONLY WITH DETECTOR CHECK BACKFLOW PREVENTER
108-14A	INSIDE DETECTOR CHECK EMR METER SETTING FIRE BRANCH ONLY WITH BACKFLOW PREVENTER
108-15	PIT - DUAL SERVICE BRANCH SETTING & 3/4" OR 1" METER WITH BACKFLOW PREVENTER
108-15A	INSIDE DUAL SERVICE BRANCH EMR SETTING 3/4" & 1" METER WITH BACKFLOW PREVENTER
108-15B	PIT - FULLY METERED FIRE SYSTEM
108-15C	INSIDE - FULLY METERED FIRE SYSTEM
108-16	PIT - DUAL SERVICE BRANCH SETTING & 1-1/2" OR 2" METER WITH BACKFLOW PREVENTER
108-16A	INSIDE DUAL SERVICE SETTING 1-1/2" & 2" EMR METER WITH BACKFLOW PREVENTER
108-17	PIT - DUAL SERVICE BRANCH SETTING 3" & LARGER, DOMESTIC METER WITH BACKFLOW PREVENTER
108-17A	INSIDE DUAL SERVICE BRANCH SETTING 3" & LARGER DOMESTIC METER EMR WITH BACKFLOW PREVENTER
108-18	OUTSIDE - 3/4" & 1" DOUBLE CHECK BACKFLOW PREVENTER IN FROST PROOF SETTING
108-19	OUTSIDE - 1-1/2" & 2" DOUBLE CHECK BACKFLOW PREVENTER IN FROST PROOF SETTING
108-20	INSIDE SETTING OF BACKFLOW PREVENTER
108-21	OUTSIDE FREEZE PROTECTION BACKFLOW DEVICE ENCLOSURE
108-22	PIT FORDOUBLE CHECK BACKFLOW PREVENTER
108-23	CONNECTION TO FIRE HYDRANT FOR TEMPORARY WATER
108-24	MANIFOLD METER FROST PROOF BOX SETTING
108-25	MANIFOLD METER - INSIDE SETTING
E-476-M	CURB BOX WITH A CAST IRON LID & RING, PLASTIC TOP & BOTTOM
E-477-M	ROADWAY BOX WITH A CAST IRON LID & RING, PLASTIC TOP & BOTTOM

DATE: 12-7-96

NOTE:
PRESSURE RANGES AS SHOWN ARE OPERATING PRESSURES. CONCRETE AND STEEL QUANTITIES ARE CALCULATED USING OPERATING PRESSURE PLUS 50 P.S.I.

NOTE:
CONCRETE BLOCKING TO BE POURED AGAINST UNDISTURBED EARTH ON THE THRUST SIDE.

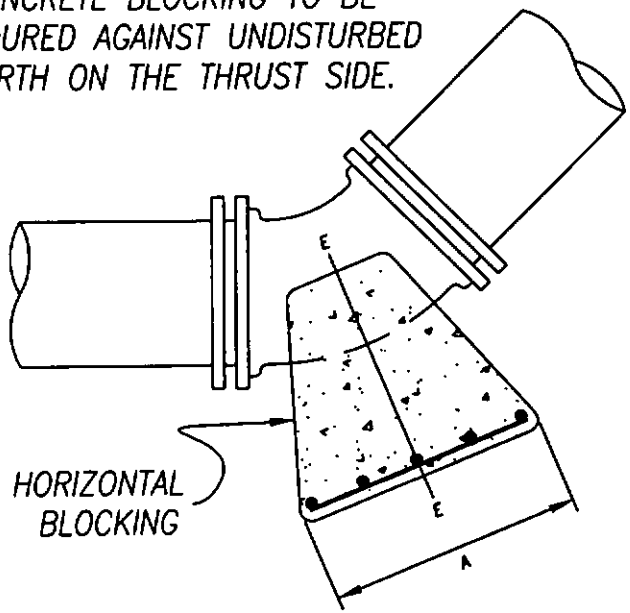

3/4" REINFORCING BARS TO BE PLACED ON THRUST SIDE 6" O.C.

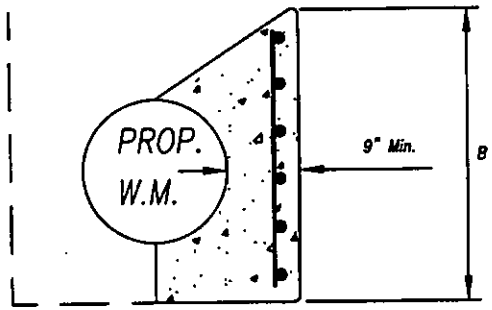

HORIZONTAL SECTION E – E

SIZE	BEND ANGLE	75 P.S.I. & UNDER				75 P.S.I. TO 125 P.S.I.				125 P.S.I. TO 200 P.S.I.			
		A	B	CU. YDS. CONC.	LBS. STEEL	A	B	CU. YDS. CONC.	LBS. STEEL	A	B	CU. YDS. CONC.	LBS. STEEL
4	11 1/4	1'6"	1'6"	0.1	–	1'6"	1'6"	0.1	14	1'6"	1'6"	0.1	14
	22 1/2	1'6"	1'6"	0.1	–	1'6"	1'6"	0.1	14	1'6"	1'6"	0.1	14
	45	1'6"	1'6"	0.1	–	1'6"	1'6"	0.1	14	1'6"	1'6"	0.1	14
6	11 1/4	1'6"	1'6"	0.1	–	1'6"	1'6"	0.1	14	1'6"	1'6"	0.1	14
	22 1/2	1'6"	1'6"	0.1	–	1'6"	1'6"	0.1	14	1'6"	1'6"	0.1	14
	45	1'6"	1'6"	0.1	–	1'6"	1'6"	0.1	14	2'0"	1'6"	0.1	16
8	11 1/4	1'6"	1'6"	0.1	–	1'6"	1'9"	0.1	17	1'6"	1'9"	0.1	17
	22 1/2	1'6"	1'6"	0.1	–	1'6"	1'9"	0.1	17	1'6"	1'9"	0.1	17
	45	2'0"	1'6"	0.2	–	2'0"	1'9"	0.2	20	2'6"	2'0"	0.2	24
10	11 1/4	1'6"	1'6"	0.1	–	1'6"	1'6"	0.1	14	1'6"	1'6"	0.1	14
	22 1/2	1'6"	1'6"	0.1	–	2'0"	1'6"	0.2	18	2'0"	2'0"	0.2	24
	45	2'6"	1'6"	0.2	–	3'0"	2'0"	0.3	36	3'0"	2'6"	0.4	40
12	11 1/4	1'6"	1'6"	0.1	–	1'6"	2'0"	0.2	20	1'6"	2'0"	0.2	18
	22 1/2	1'6"	2'0"	0.2	–	2'0"	2'0"	0.2	24	2'6"	2'6"	0.3	30
	45	2'6"	2'0"	0.3	–	3'6"	2'6"	0.4	45	3'6"	3'6"	0.6	63
16	11 1/4	1'6"	2'0"	0.2	16	2'0"	2'0"	0.2	21	2'0"	2'6"	0.3	30
	22 1/2	2'6"	2'6"	0.3	24	3'0"	2'6"	0.4	38	3'0"	3'6"	0.6	63
	45	3'6"	3'0"	0.6	54	4'0"	3'6"	0.8	68	4'0"	5'0"	1.2	120
20	11 1/4	2'0"	2'6"	0.3	21	2'6"	2'6"	0.4	30	3'0"	2'6"	0.5	45
	22 1/2	3'6"	2'6"	0.6	45	3'6"	3'6"	0.8	63	4'0"	4'0"	1.2	96
	45	4'6"	3'6"	1.0	74	5'0"	4'6"	1.4	108	6'0"	5'0"	2.2	180

IN LIEU OF STEEL REINFORCING BARS, THE CONTRACTOR HAS THE OPTION TO USE WELDED WIRE FABRIC SHEETS (12X12–W5.8XW5.8) @ 42 LBS. PER 100 S.F.

TYPICAL BLOCKING DETAIL
CAST IRON BENDS – HORIZONTAL

CINCINNATI WATER WORKS
ENGINEERING DIVISION

DATE 10/22/96

APPROVED Paul E. Jones

STANDARD DRAWING 101–1

NOTE:
PRESSURE RANGES AS SHOWN ARE OPERATING PRESSURES. CONCRETE AND STEEL QUANTITIES ARE CALCULATED USING OPERATING PRESSURE PLUS 50 P.S.I.

NOTE:
CONCRETE BLOCKING TO BE POURED AGAINST UNDISTURBED EARTH ON THE THRUST SIDE.

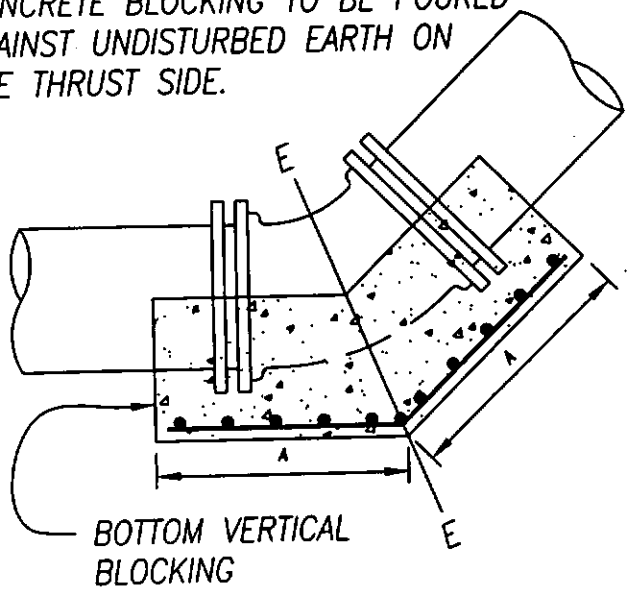

3/4" REINFORCING BARS TO BE PLACED ON THRUST SIDE 6" O.C.

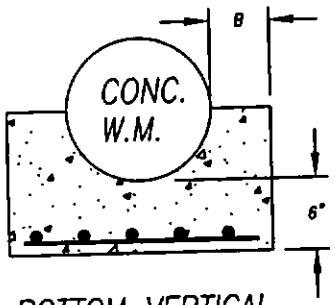

BOTTOM VERTICAL
SECTION E – E

SIZE	BEND ANGLE	75 P.S.I. & UNDER				75 P.S.I. TO 125 P.S.I.				125 P.S.I. TO 200 P.S.I.			
		A	B	CU. YDS. CONC.	LBS. STEEL	A	B	CU. YDS. CONC.	LBS. STEEL	A	B	CU. YDS. CONC.	LBS. STEEL
4	11 1/4	1'0"	0'6"	0.1	NA	1'0"	0'6"	0.1	15	1'0"	0'6"	0.1	15
	22 1/2	1'0"	0'6"	0.1	NA	1'0"	0'6"	0.1	15	1'0"	0'6"	0.1	15
	45	1'0"	0'6"	0.1	NA	1'0"	0'6"	0.1	15	1'0"	0'6"	0.1	15
6	11 1/4	1'0"	0'6"	0.1	–	1'0"	0'6"	0.1	16	1'0"	0'6"	0.1	16
	22 1/2	1'0"	0'6"	0.1	–	1'0"	0'6"	0.1	16	1'0"	0'6"	0.1	16
	45	1'0"	0'6"	0.1	–	1'0"	0'6"	0.1	16	1'0"	0'6"	0.1	16
8	11 1/4	1'0"	0'6"	0.1	–	1'0"	0'6"	0.1	20	1'0"	0'6"	0.1	20
	22 1/2	1'0"	0'6"	0.1	–	1'0"	0'6"	0.1	20	1'0"	0'6"	0.1	20
	45	1'0"	0'6"	0.1	–	1'0"	0'6"	0.1	20	1'0"	0'6"	0.2	30
10	11 1/4	1'0"	0'6"	0.2	–	1'0"	0'6"	0.2	21	1'0"	0'6"	0.2	21
	22 1/2	1'0"	0'6"	0.2	–	1'0"	0'6"	0.2	21	1'0"	0'6"	0.2	21
	45	1'0"	0'6"	0.2	–	1'6"	0'6"	0.2	30	2'0"	0'6"	0.3	39
12	11 1/4	1'0"	0'6"	0.2	–	1'0"	0'6"	0.2	25	1'0"	0'6"	0.2	22
	22 1/2	1'0"	0'6"	0.2	–	1'0"	0'6"	0.2	25	1'6"	0'6"	0.3	31
	45	1'6"	0'6"	0.3	–	2'0"	0'6"	0.4	46	3'0"	0'6"	0.5	58
16	11 1/4	1'0"	0'6"	0.3	27	1'0"	0'6"	0.3	27	1'0"	0'6"	0.3	27
	22 1/2	1'0"	0'6"	0.3	27	1'6"	0'6"	0.4	38	2'0"	0'6"	0.5	49
	45	2'0"	0'6"	0.5	49	3'0"	0'6"	0.7	71	4'0"	0'6"	0.9	94
20	11 1/4	1'0"	0'6"	0.3	31	1'0"	0'6"	0.3	31	1'6"	0'6"	0.5	44
	22 1/2	1'6"	0'6"	0.5	44	2'0"	0'6"	0.6	58	3'0"	0'6"	0.9	84
	45	3'0"	0'6"	0.9	80	4'0"	0'6"	1.2	110	5'6"	0'6"	1.6	150

SPECIAL REQUIREMENTS

1. WHERE THE DISTANCE BETWEEN CONCRETE BLOCKING FOR A TOP VERTICAL BEND AND BLOCKING FOR A BOTTOM VERTICAL BEND IS LESS THAN 3 FEET APART, STANDARD DRAWING NO. 101-4 SHALL APPLY.

2. THIS STANDARD DRAWING DOES NOT APPLY TO CREEK CROSSING, SEE STANDARD DRAWING NO. 105-1.

3. IN LIEU OF STEEL REINFORCING BARS, THE CONTRACTOR HAS THE OPTION TO USE WELDED WIRE FABRIC SHEETS (12X12-W5.8XW5.8) @ 42 LBS. PER 100 S.F.

TYPICAL BLOCKING DETAIL
CAST IRON BENDS – BOTTOM VERTICAL

CINCINNATI WATER WORKS
ENGINEERING DIVISION

DATE 10/25/96

APPROVED Paul E. Tomes

STANDARD DRAWING 101-2

NOTE:
1. PRESSURE RANGES AS SHOWN ARE OPERATING PRESSURES. CONCRETE AND STEEL QUANTITIES ARE CALCULATED USING OPERATING PRESSURE PLUS 50 P.S.I.
2. CONCRETE AND STEEL QUANTITIES ARE FOR ESTIMATING PURPOSES ONLY.

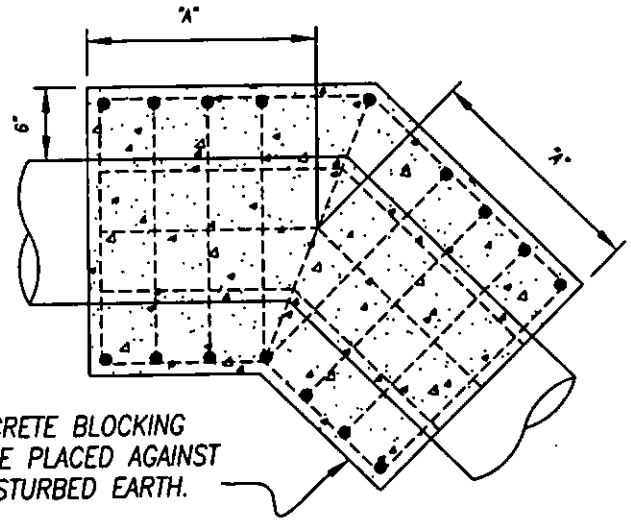

SIZE	BEND ANGLE	75 P.S.I. & UNDER				75 P.S.I. TO 125 P.S.I.				125 P.S.I. TO 200 P.S.I.			
		A	B	CU. YDS. CONC.	LBS. STEEL	A	B	CU. YDS. CONC.	LBS. STEEL	A	B	CU. YDS. CONC.	LBS. STEEL
4"	11-1/4°	1'0"	0'9"	0.2	36	1'0"	0'9"	0.2	36	1'0"	0'9"	0.2	36
	22-1/2°	1'0"	0'9"	0.2	36	1'0"	0'9"	0.2	36	1'6"	0'9"	0.3	55
	45°	1'6"	0'9"	0.3	55	1'6"	0'9"	0.3	55	2'0"	1'0"	0.7	100
6"	11-1/4°	1'0"	0'9"	0.3	44	1'0"	0'9"	0.3	44	1'6"	0'9"	0.4	67
	22-1/2°	1'6"	0'9"	0.4	67	1'6"	0'9"	0.4	67	2'0"	0'9"	0.5	89
	45°	2'0"	0'9"	0.5	89	2'0"	1'0"	0.8	116	3'0"	1'0"	1.1	174
8"	11-1/4°	1'6"	0'9"	0.5	79	1'6"	0'9"	0.5	79	1'6"	0'9"	0.5	79
	22-1/2°	1'6"	0'9"	0.5	79	2'0"	0'9"	0.6	105	2'6"	1'0"	1.1	150
	45°	2'0"	1'0"	0.9	120	3'6"	1'0"	1.5	210	5'0"	1'0"	2.1	300
10"	11-1/4°	1'6"	0'9"	0.5	86	1'6"	0'9"	0.5	86	2'0"	0'9"	0.7	115
	22-1/2°	1'6"	0'9"	0.5	86	2'0"	1'0"	1.0	124	3'0"	1'0"	1.4	186
	45°	3'0"	1'0"	1.4	186	4'6"	1'0"	2.2	279	7'0"	1'0"	3.4	435
12"	11-1/4°	1'6"	0'9"	0.6	90	1'6"	0'9"	0.6	90	2'0"	0'9"	0.8	119
	22-1/2°	2'0"	0'9"	0.8	119	2'6"	1'0"	1.3	168	4'0"	1'0"	2.1	240
	45°	4'0"	1'0"	2.1	240	6'0"	1'0"	3.2	403	9'0"	1'0"	4.7	605
16"	11-1/4°	1'6"	0'9"	0.7	100	1'6"	0'9"	0.7	100	2'0"	1'0"	1.3	155
	22-1/2°	2'0"	1'0"	1.3	155	3'6"	1'0"	2.2	271	6'6"	1'0"	4.1	503
	45°	6'0"	1'0"	3.8	464	10'0"	1'0"	6.3	774	9'6"	1'6"	9.6	963

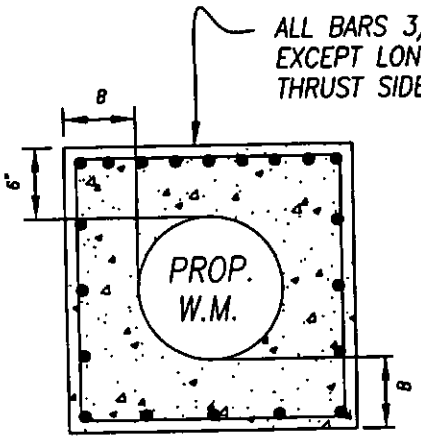

SPECIAL REQUIREMENTS
1. WHERE THE DIMENSIONS INDICATED WILL NOT PERMIT THE BLOCKING TO BEAR AGAINST UNDISTURBED EARTH, WATER MAIN SHALL BE ENCASED AS SHOWN ON STANDARD DRAWING NO. 101-4.
2. WHERE THE DISTANCE BETWEEN CONCRETE BLOCKING FOR A TOP VERTICAL BEND AND BLOCKING FOR A BOTTOM VERTICAL BENDS IS LESS THAN 3 FEET APART, STANDARD DRAWING NO. 101-4 SHALL APPLY.
3. THIS STANDARD DRAWING DOES NOT APPLY TO CREEK CROSSING, SEE STANDARD DRAWING NO. 105-1.

NOTE:
IN LIEU OF STEEL REINFORCING BARS, THE CONTRACTOR HAS THE OPTION TO USE WELDED WIRE FABRIC SHEETS (12 x 12 - W 5.8 x W 5.8) @ 42 LBS PER. 100 S.F.

TYPICAL BLOCKING DETAIL
CAST IRON BENDS - TOP VERTICAL

CINCINNATI WATER WORKS
ENGINEERING DIVISION

DATE 11/9/96

APPROVED Paul E. Tomas

STANDARD DRAWING 101-3

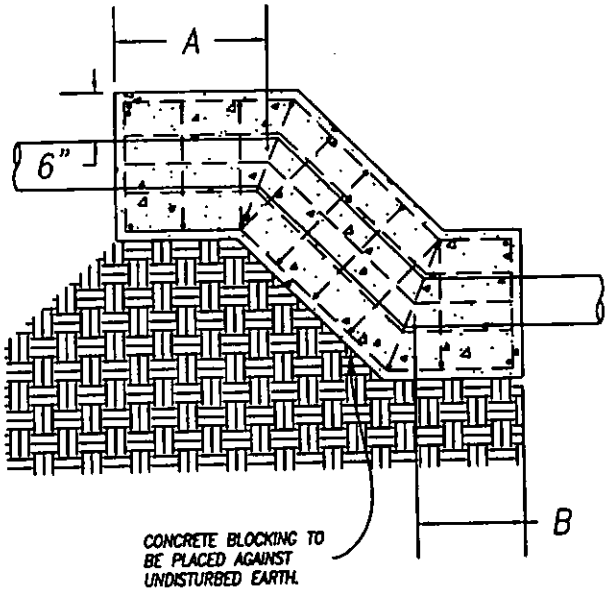

SIZE	BEND ANGLE	75 P.S.I. & UNDER					75 P.S.I. TO 125 P.S.I.					125 P.S.I. TO 200 P.S.I.				
		A	B	C	CONC. C.Y. PER LIN. FT.	STEEL LBS. PER LIN. FT.	A	B	C	CONC. C.Y. PER LIN. FT.	STEEL LBS. PER LIN. FT.	A	B	C	CONC. C.Y. PER LIN. FT.	STEEL LBS. PER LIN. FT.
4"	11-1/4	1'-0"	1'-0"	0'-9"	.10	18	1'-0"	1'-0"	0'-9"	.10	18	1'-0"	1'-0"	0'-9"	.10	18
	22-1/2	1'-0"	1'-0"	0'-9"	.10	18	1'-0"	1'-0"	0'-9"	.10	18	1'-6"	1'-0"	0'-9"	.10	18
	45	1'-6"	1'-0"	0'-9"	.10	18	1'-6"	1'-0"	0'-9"	.10	18	2'-0"	1'-0"	1'-0"	.18	25
6"	11-1/4	1'-0"	1'-0"	0'-9"	.15	22	1'-0"	1'-0"	0'-9"	.15	22	1'-6"	1'-0"	0'-9"	.15	22
	22-1/2	1'-6"	1'-0"	0'-9"	.15	22	1'-6"	1'-0"	0'-9"	.15	22	2'-0"	1'-0"	0'-9"	.15	22
	45	2'-0"	1'-0"	0'-9"	.15	22	2'-0"	1'-0"	1'-0"	.20	29	3'-0"	1'-0"	1'-0"	.20	29
8"	11-1/4	1'-6"	1'-0"	0'-9"	.17	26	1'-6"	1'-0"	0'-9"	.17	26	1'-6"	1'-0"	0'-9"	.17	26
	22-1/2	1'-6"	1'-0"	0'-9"	.17	26	2'-0"	1'-0"	0'-9"	.17	26	2'-6"	1'-0"	1'-0"	.23	30
	45	2'-0"	1'-0"	1'-0"	.23	30	3'-6"	1'-0"	1'-0"	.23	30	5'-0"	1'-6"	1'-0"	.23	30
10"	11-1/4	1'-6"	1'-0"	0'-9"	.17	29	1'-6"	1'-0"	0'-9"	.17	29	2'-0"	1'-0"	0'-9"	.17	29
	22-1/2	1'-6"	1'-0"	0'-9"	.17	29	2'-0"	1'-0"	1'-0"	.23	31	3'-0"	1'-0"	1'-0"	.23	31
	45	3'-0"	1'-0"	1'-0"	.23	31	4'-6"	1'-6"	1'-0"	.23	31	7'-0"	2'-0"	1'-0"	.23	31
12"	11-1/4	1'-6"	1'-0"	0'-9"	.20	30	1'-6"	1'-0"	0'-9"	.20	30	2'-0"	1'-0"	0'-9"	.20	30
	22-1/2	2'-0"	1'-0"	0'-9"	.20	30	2'-6"	1'-0"	1'-0"	.26	40	4'-0"	1'-6"	1'-0"	.26	40
	45	4'-0"	1'-0"	1'-0"	.26	40	6'-0"	2'-0"	1'-0"	.26	40	9'-0"	3'-0"	1'-0"	.26	40
16"	11-1/4	1'-6"	1'-0"	0'-9"	.24	34	1'-6"	1'-0"	0'-9"	.24	34	2'-0"	1'-0"	1'-0"	.32	39
	22-1/2	2'-0"	1'-0"	1'-0"	.32	39	3'-6"	1'-6"	1'-0"	.32	39	6'-6"	2'-0"	1'-0"	.32	39
	45	6'-0"	2'-0"	1'-0"	.32	39	10'-0"	3'-0"	1'-0"	.32	39	9'-6"	4'-0"	1'-6"	.51	.51

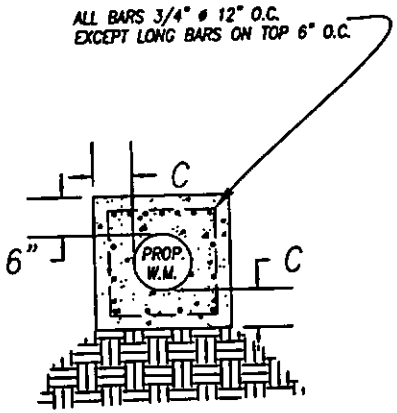

NOTE: 1. PRESSURE RANGES AS SHOWN ARE OPERATING PRESSURES. CONCRETE AND STEEL QUANTITIES ARE CALCULATED USING OPERATING PRESSURE PLUS 50 P.S.I.

2. CONCRETE AND STEEL QUANTITIES ARE FOR ESTIMATING PURPOSES ONLY.

3. IN LIEU OF STEEL REINFORCING BARS, THE CONTRACTOR HAS THE OPTION TO USE WELDED WIRE FABRIC SHEETS (12 X 12 – W5.8 X W5.8) @ 42 LBS. PER. 100 S.F.

TOP AND BOTTOM VERTICAL BENDS FULL ENCASEMENT

CINCINNATI WATER WORKS
ENGINEERING DIVISION

DATE 10/26/96

APPROVED Paul E. Tomes

STANDARD DRAWING 101-4

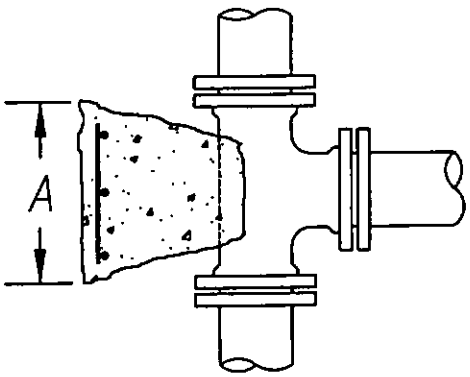

3/4" REINFORCING BARS TO BE PLACED ON THRUST SIDE 6" O.C.

SIZE		75 P.S.I. & UNDER				75 P.S.I. TO 125 P.S.I.				125 P.S.I. TO 200 P.S.I.			
RUN	BRANCH	A	B	CU. YDS. CONC.	LBS. STEEL	A	B	CU. YDS. CONC.	LBS. STEEL	A	B	CU. YDS. CONC.	LBS. STEEL
6"	6"	1'9"	1'6"	0.1	17	2'6"	1'6"	0.1	23	2'6"	2'0"	0.2	30
8"	6"	1'6"	1'9"	0.1	17	2'0"	1'9"	0.1	23	2'6"	2'0"	0.2	30
12"	6"	1'6"	2'0"	0.2	18	2'0"	2'0"	0.2	24	2'6"	2'0"	0.2	30
16"	6"	1'6"	2'6"	0.2	23	1'6"	2'6"	0.2	23	2'0"	2'6"	0.2	30
20"	6"	1'6"	2'9"	0.2	26	1'6"	2'9"	0.2	26	1'9"	2'9"	0.2	33
8"	8"	2'0"	2'0"	0.2	24	2'6"	2'0"	0.2	28	3'0"	2'3"	0.2	32
10"	8"	2'0"	2'0"	0.2	24	2'6"	2'0"	0.2	28	3'0"	2'3"	0.2	32
12"	8"	2'0"	2'0"	0.2	24	2'6"	2'0"	0.2	28	3'0"	2'3"	0.2	32
16"	8"	2'0"	2'0"	0.2	24	2'6"	2'6"	0.3	35	3'0"	2'4"	0.3	32
20"	8"	2'0"	2'0"	0.2	24	2'6"	2'9"	0.4	35	3'0"	2'9"	0.4	39
12"	12"	3'0"	3'0"	0.5	54	4'0"	2'6"	0.4	55	4'6"	3'6"	0.7	95
16"	12"	3'0"	3'0"	0.5	54	4'0"	2'6"	0.4	55	4'6"	3'9"	0.7	98
20"	12"	3'0"	3'0"	0.5	54	4'0"	2'9"	0.6	60	4'6"	4'0"	1.0	108
20"	16"	4'0"	3'6"	0.8	84	4'6"	4'0"	1.0	108	6'0"	5'0"	1.5	180
20"	20"	4'6"	4'6"	1.1	122	5'6"	5'0"	1.4	165	7'0"	6'0"	2.0	252

NOTE: 1. PRESSURE RANGES AS SHOWN ARE OPERATING PRESSURES. CONCRETE AND STEEL QUANTITIES ARE CALCULATED USING OPERATING PRESSURE PLUS 50 P.S.I.

2. CONCRETE AND STEEL QUANTITIES ARE FOR ESTIMATING PURPOSES ONLY.

3. IN LIEU OF STEEL REINFORCING BARS, THE CONTRACTOR HAS THE OPTION TO USE WELDED WIRE FABRIC SHEETS (12 X 12 – W5.8 X W5.8) @ 42 LBS. PER 100 S.F.

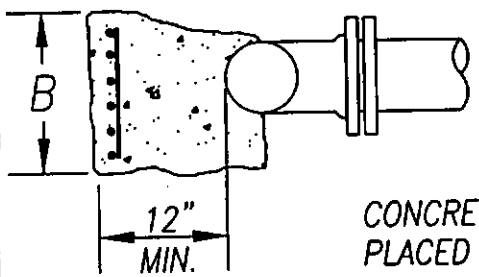

CONCRETE BLOCKING TO BE PLACED AGAINST UNDISTURBED EARTH.

NOTE:
THIS STD. DWG. SHALL BE UTILIZED FOR BLOCKING OF TEES, 90° BENDS, FIRE HYDRANTS, AND PLUGS

TYPICAL BLOCKING DETAIL CAST IRON TEES

CINCINNATI WATER WORKS
ENGINEERING DIVISION

DATE 10/19/96

APPROVED Paul E. Torno

STANDARD DRAWING 101-5

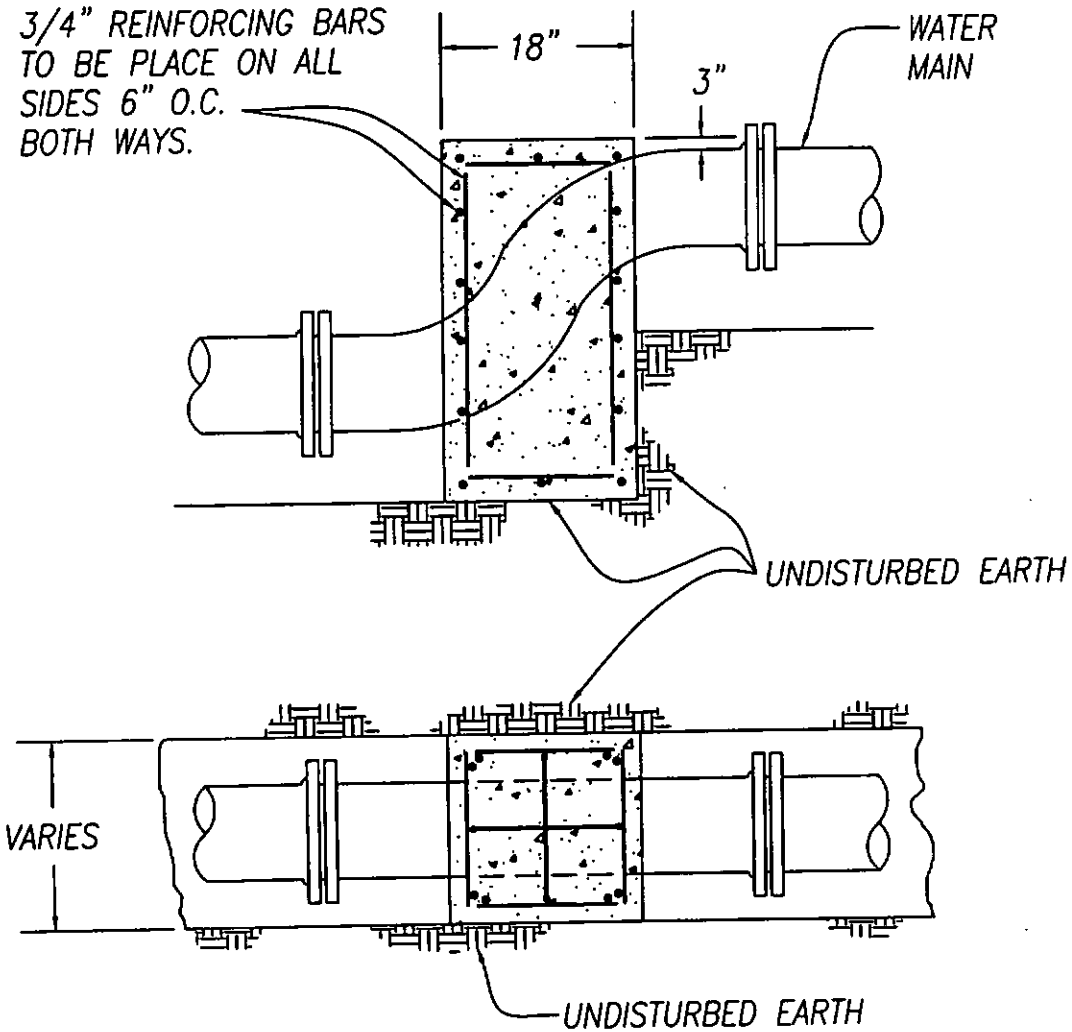

FOR ESTIMATING ONLY

PIPE SIZE	CU. YD. CONC.	LBS. STEEL
4"	.2	69
6"	.2	69
8"	.2	69
10"	.25	83
12"	.3	88

NOTE:
CONCRETE BLOCKING TO BE POURED AGAINST UNDISTURBED EARTH.

CONCRETE BLOCKING FOR OFFSET BENDS IN A HORIZONTAL POSITION REFER TO STANDARD DRAWING 101-1

IN LIEU OF STEEL REINFORCING BARS. THE CONTRACTOR HAS THE OPTION TO USE WELDED WIRE FABRIC SHEETS (12 X 12 - W5.8 X W5.8) @ 42 LBS PER S.F.

TYPICAL BLOCKING DETAIL FOR CAST IRON OFFSET BENDS

CINCINNATI WATER WORKS
ENGINEERING DIVISION

DATE 10/19/96

APPROVED Paul E. Tomm

STANDARD DRAWING 101-6

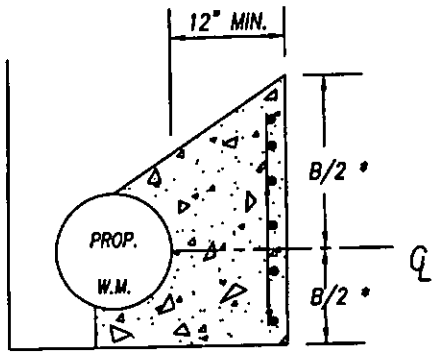

HORIZONTAL
SECTION E-E

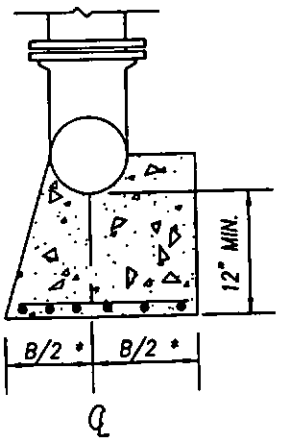

SECTION C-C

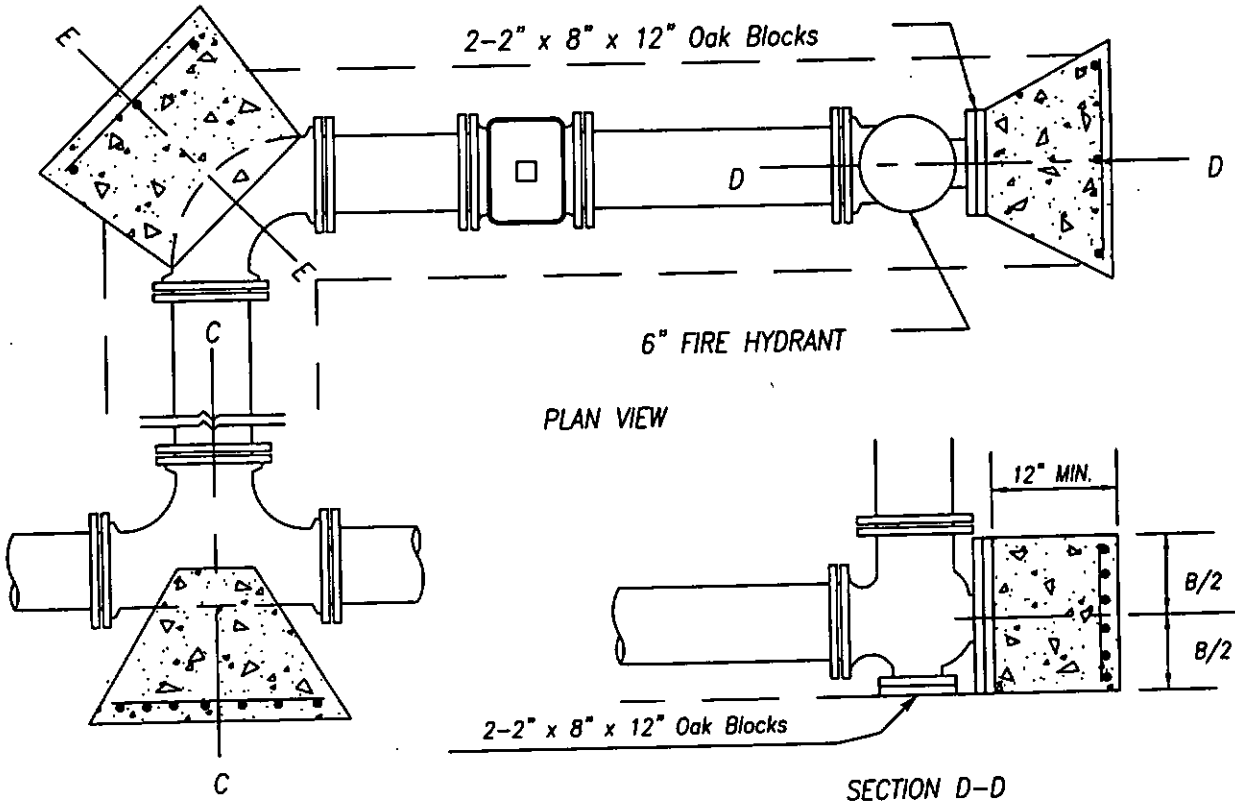

SECTION D-D

* SEE NOTE ONE

NOTE:

1. REFER TO STANDARD DRAWING NO. 101-5 FOR PLACEMENT OF REINFORCING STEEL AND BLOCKING DETAILS.

2. CONCRETE BLOCKING TO BE POURED AGAINST UNDISTURBED EARTH ON THE THRUST SIDE.

3. IN LIEU OF STEEL REINFORCING BARS, THE CONTRACTOR HAS THE OPTION TO USE WELDED WIRE FABRIC SHEETS (12 x 12 - W 5.8 x W 5.8) @ 42 LBS. PER 100 S.F.

TYPICAL CONCRETE BLOCKING FOR FIRE HYDRANT SETTING		
CINCINNATI WATER WORKS ENGINEERING DIVISION		DATE 10/26/96
APPROVED Paul E. Tomm	STANDARD DRAWING 101-7	

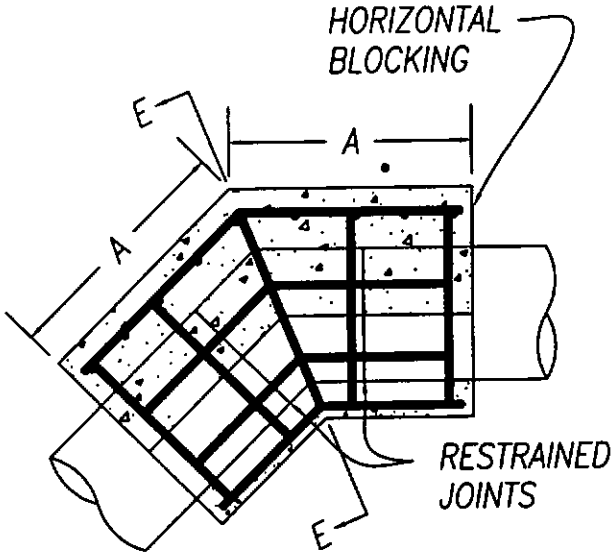

SIZE	BEND ANGLE	75 P.S.I. & UNDER					75 P.S.I. TO 125 P.S.I.					125 P.S.I. TO 200 P.S.I.				
		A	B	C	CU. YDS. CONC.	LBS. STEEL	A	B	C	CU. YDS. CONC.	LBS. STEEL	A	B	C	CU. YDS. CONC.	LBS. STEEL
24"	5°-20°	2'-0"	4'-4"	3'-10"	1.1	120	2'-0"	4'-4"	3'-10"	1.1	120	2'-0"	4'-4"	3'-10"	1.1	120
	21°-35°	2'-9"	4'-4"	3'-10"	1.5	230	2'-9"	4'-4"	3'-10"	1.5	230	2'-9"	4'-4"	3'-10"	1.5	230
	36°-45°	3'-2"	4'-4"	3'-10"	1.6	255	3'-2"	4'-4"	3'-10"	1.6	255	3'-2"	4'-4"	3'-10"	1.6	255
30"	5°-20°	2'-3"	4'-11"	4'-5"	1.5	225	2'-3"	4'-11"	4'-5"	1.5	225	2'-3"	4'-11"	4'-5"	1.5	225
	21°-35°	2'-11"	4'-11"	4'-5"	1.8	290	2'-11"	4'-11"	4'-5"	1.8	290	3'-6"	4'-11"	4'-5"	2.4	330
	36°-45°	3'-5"	4'-11"	4'-5"	2.0	340	3'-5"	4'-11"	4'-5"	2.0	340	4'-6"	4'-11"	4'-5"	3.1	420
36"	5°-20°	2'-4"	5'-10"	5'-4"	2.3	280	2'-4"	5'-10"	5'-4"	2.3	280	2'-4"	5'-10"	5'-4"	2.3	280
	21°-35°	3'-0"	5'-10"	5'-4"	3.0	335	3'-0"	5'-10"	5'-4"	3.0	335	3'-11"	5'-10"	5'-4"	3.9	450
	36°-45°	3'-8"	5'-10"	5'-4"	3.2	415	3'-8"	5'-10"	5'-4"	3.2	415	4'-11"	5'-10"	5'-4"	4.9	610
42"	5°-20°	2'-6"	6'-3"	5'-9"	2.6	290	2'-6"	6'-3"	5'-9"	2.6	290	2'-9"	6'-3"	5'-9"	3.2	340
	21°-35°	3'-5"	6'-3"	5'-9"	3.8	380	3'-5"	6'-3"	5'-9"	3.8	380	4'-10"	6'-3"	5'-9"	5.5	565
	36°-45°	4'-0"	6'-3"	5'-9"	4.1	460	4'-3"	6'-3"	5'-9"	4.9	480	6'-1"	6'-3"	5'-9"	6.9	730
48"	5°-20°	2'-9"	6'-10"	6'-4"	3.4	300	2'-9"	6'-10"	6'-4"	3.4	300	3'-4"	6'-10"	6'-4"	4.7	440
	21°-35°	3'-8"	6'-10"	6'-4"	4.6	400	4'-0"	6'-10"	6'-4"	5.6	500	5'-9"	6'-10"	6'-4"	8.0	670
	36°-45°	4'-5"	6'-10"	6'-4"	5.6	495	5'-0"	6'-10"	6'-4"	7.2	625	7'-3"	6'-10"	6'-4"	10.2	895

CONCRETE BLOCKING TO BE PLACED AGAINST UNDISTURBED EARTH.

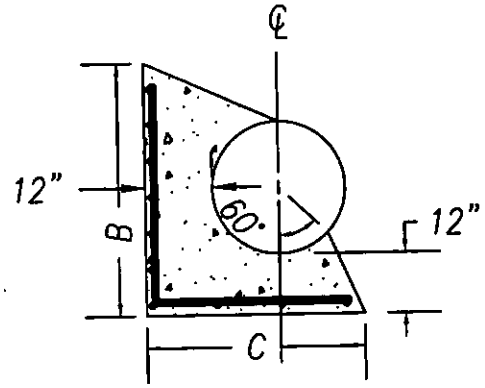

HORIZONTAL SECTION E-E

NOTE:
1. PRESSURE RANGES AS SHOWN ARE OPERATING PRESSURES. CONCRETE AND STEEL QUANTITIES ARE CALCULATED USING OPERATING PRESSURE PLUS 50 P.S.I.
2. CONCRETE AND STEEL QUANTITIES ARE FOR ESTIMATING PURPOSES.
3. THE "A" DIMENSION IS BASED ON A MINIMUM OF 12" FROM THE END OF THE CONCRETE BLOCK TO THE FACE OF THE BELL RING MEASURED ALONG THE CENTER LINE OF THE PIPE.
4. IN LIEU OF STEEL REINFORCING BARS, THE CONTRACTOR HAS THE OPTION TO USE WELDED WIRE FABRIC SHEETS (12 X 12 – W 5.8 X W 5.8) @ 42 LBS. PER. 100 S.F.

3/4" REINFORCING BARS TO BE PLACED 6" O.C. ON THRUST SIDE AND 12" O.C. ON BOTTOM.

TYPICAL BLOCKING DETAIL
CONCRETE PIPE BENDS HORIZONTAL

CINCINNATI WATER WORKS
ENGINEERING DIVISION

DATE 10/19/96

APPROVED Paul E. Torne

STANDARD DRAWING 102-1

NOTE:
PRESSURE RANGES AS SHOWN ARE OPERATING PRESSURES. CONCRETE AND STEEL QUANTITIES ARE CALCULATED USING OPERATING PRESSURE PLUS 50 P.S.I.

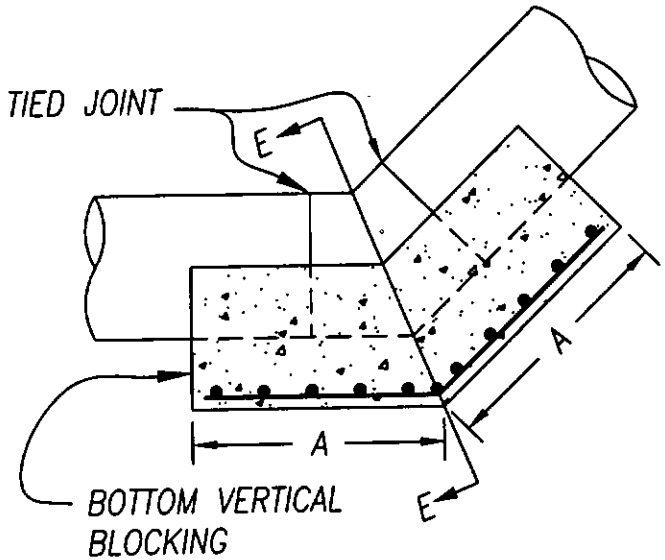

NOTE:
CONCRETE BLOCKING TO BE POURED AGAINST UNDISTURBED EARTH ON THE THRUST SIDE.

SIZE	BEND ANGLE	75 P.S.I. & UNDER				75 P.S.I. TO 125 P.S.I.				125 P.S.I. TO 200 P.S.I.			
		A	B	CU. YDS. CONC.	LBS. STEEL	A	B	CU. YDS. CONC.	LBS. STEEL	A	B	CU. YDS. CONC.	LBS. STEEL
24	5° to 20°	2'-0"	1'-0"	1.1	120	2'-0"	1'-0"	1.1	120	2'-0"	1'-0"	1.1	120
	21° to 35°	2'-9"	1'-0"	1.4	160	2'-9"	1'-0"	1.4	160	2'-9"	1'-0"	1.4	160
	36° to 45°	3'-2"	1'-0"	1.5	180	3'-2"	1'-0"	1.5	180	3'-2"	1'-0"	1.5	180
30	5° to 20°	2'-3"	1'-0"	1.3	150	2'-3"	1'-0"	1.3	150	2'-3"	1'-0"	1.3	150
	21° to 35°	2'-11"	1'-0"	1.6	190	2'-11"	1'-0"	1.6	190	3'-6"	1'-0"	2.2	225
	36° to 45°	3'-5"	1'-0"	1.8	225	3'-5"	1'-0"	1.8	225	4'-6"	1'-0"	2.8	290
36	5° to 20°	2'-4"	1'-0"	2.0	190	2'-4"	1'-0"	2.0	190	2'-4"	1'-0"	2.0	190
	21° to 35°	3'-0"	1'-0"	2.5	230	3'-0"	1'-0"	2.5	230	3'-11"	1'-0"	3.3	300
	36° to 45°	3'-8"	1'-0"	2.7	275	3'-8"	1'-0"	2.7	275	4'-11"	1'-0"	4.2	375
42	5° to 20°	2'-6"	1'-0"	2.0	190	2'-6"	1'-0"	2.0	190	2'-9"	1'-0"	2.5	230
	21° to 35°	3'-5"	1'-0"	3.1	260	3'-5"	1'-0"	3.1	260	4'-10"	1'-0"	4.4	390
	36° to 45°	4'-0"	1'-0"	3.3	300	4'-3"	1'-0"	3.9	350	6'-1"	1'-0"	5.6	490
48	5° to 20°	2'-9"	1'-0"	2.7	210	2'-9"	1'-0"	2.7	210	3'-4"	1'-0"	3.8	295
	21° to 35°	3'-8"	1'-0"	3.8	275	4'-0"	1'-0"	4.6	345	5'-9"	1'-0"	6.5	455
	36° to 45°	4'-5"	1'-0"	4.5	335	5'-0"	1'-0"	5.8	430	7'-3"	1'-0"	8.2	600

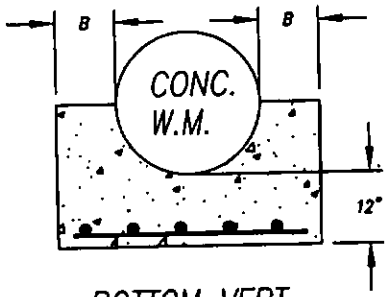

BOTTOM VERT.
SECTION E – E

3/4" REINFORCING BARS, TO BE PLACED ON THRUST SIDE 6" O.C.

NOTE:
THE "A" DIMENSION IS BASED ON A MINIMUM OF 12" FROM THE END OF THE CONCRETE BLOCK TO THE FACE OF THE BELL RING MEASURED ALONG THE CENTER OF THE PIPE.

IN LIEU OF STEEL REINFORCING BARS, THE CONTRACTOR HAS THE OPTION TO USE WELDED WIRE FABRIC SHEETS (12 X 12 – W 5.8 X W 5.8) @ 42 LBS. PER 100 S.F.

TYPICAL BLOCKING DETAIL
CONCRETE PIPE BENDS – BOTTOM VERTICAL

CINCINNATI WATER WORKS
ENGINEERING DIVISION

DATE 10/19/96

APPROVED Paul E. Torno

STANDARD DRAWING 102–2

NOTE:
"A" DISTANCE IS THE DIMENSION FROM THE END OF THE CONCRETE BLOCK TO THE FACE OF THE BELL RING.

SIZE	75 P.S.I. & UNDER				75 P.S.I. TO 125 P.S.I.				125 P.S.I. TO 200 P.S.I.			
	A	B	CONC. C.Y./Lin. Ft.	STEEL LBS./Lin. Ft.	A	B	CONC. C.Y./Lin. Ft.	STEEL LBS./Lin. Ft.	A	B	CONC. C.Y./Lin. Ft.	STEEL LBS./Lin. Ft.
24	1'-6"	4'-4"	0.53	65	1'-6"	4'-4"	0.53	65	1'-6"	4'-4"	0.53	65
30	1'-6"	4'-11"	0.65	75	1'-6"	4'-11"	0.65	75	1'-6"	4'-11"	0.65	75
36	1'-6"	5'-10"	0.85	85	1'-6"	5'-10"	0.85	85	1'-6"	5'-10"	0.85	85
42	1'-6"	6'-3"	0.95	95	1'-6"	6'-3"	0.95	95	1'-6"	6'-3"	0.95	95
48	1'-6"	6'-10"	1.14	105	1'-6"	6'-10"	1.14	105	1'-6"	6'-10"	1.14	105

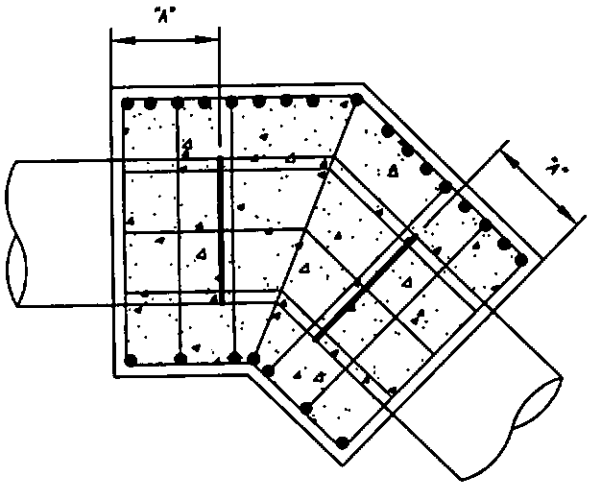

1. THE CONCRETE BLOCKING, FOR A GIVEN PIPE SIZE, HAS THE SAME DIMENSIONS FOR ANY BEND DEFLECTION TO 45° IN EACH OF THE PRESSURE RANGES.
2. IN CASES WHERE THE DISTANCE BETWEEN TOP AND BOTTOM BENDS IS SUCH THAT THE CONCRETE BLOCKING DIMENSIONS SHOWN ON THIS DRAWING AND DRAWING 102-2 OVERLAP ON THE RUN BETWEEN THE TWO BENDS, BOTH BENDS AND THE PIPE BETWEEN THEM SHALL BE FULLY ENCASED WITH CONCRETE TO THE CROSS SECTION SHOWN ON THIS DRAWING.
3. IN LIEU OF STEEL REINFORCING BARS, THE CONTRACTOR HAS THE OPTION TO USE WELDED WIRE FABRIC SHEETS (12X12-W5.8XW5.8) @ 42 LBS. PER 100 S.F.
4. PRESSURE RANGES AS SHOWN ARE OPERATING PRESSURES. CONCRETE AND STEEL QUANTITIES ARE CALCULATED USING OPERATING PRESSURE PLUS 50 P.S.I.

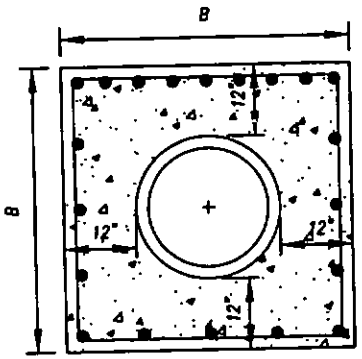

Cross-section

NOTE:
CONCRETE BLOCKING SHALL NOT BE PLACED ON TOP VERTICAL BENDS UNLESS SPECIFICALLY DESIGNED FOR ON THE CONTRACT PLANS.

3/4" REINFORCING BARS, TO BE PLACED 6" O.C. ON THRUST SIDE AND 12" O.C. ON REMAINING SIDES.

TYPICAL BLOCKING DETAIL
CONCRETE PIPE BENDS - TOP VERTICAL

CINCINNATI WATER WORKS
ENGINEERING DIVISION

DATE 10/20/96

APPROVED Paul E. Tom

STANDARD DRAWING 102-3

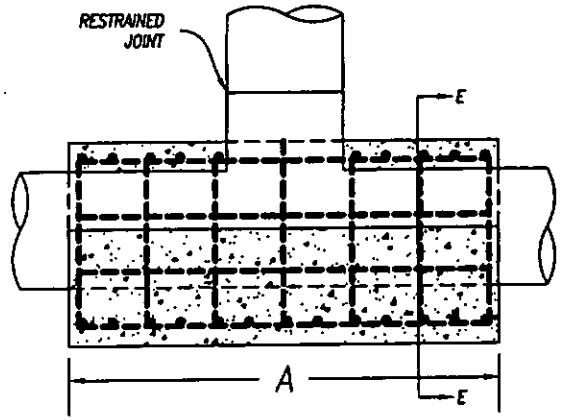

CONCRETE BLOCKING TO BE PLACED AGAINST UNDISTURBED EARTH

SIZE		75 P.S.I. & UNDER					75 to 125 P.S.I.					125 to 200 P.S.I.				
RUN	BRANCH	A	B	C	CU. YDS. CONCRETE	LBS. STEEL	A	B	C	CU. YDS. CONCRETE	LBS. STEEL	A	B	C	CU. YDS. CONCRETE	LBS. STEEL
24"	24"	7'5"	4'4"	3'10"	2.1	300	7'5"	4'4"	3'10"	2.1	300	8'7"	4'4"	3'10"	2.4	480
30"	24"	7'5"	4'11"	4'5"	2.6	375	7'5"	4'11"	4'5"	2.6	375	7'7"	4'11"	4'5"	2.6	375
30"	30"	7'5"	4'11"	4'5"	2.6	375	8'3"	4'11"	4'5"	2.8	400	11'9"	4'11"	4'5"	4.0	580
36"	24"	7'5"	5'10"	5'4"	3.7	420	7'5"	5'10"	5'4"	3.7	420	7'5"	5'10"	5'4"	3.7	420
36"	30"	7'5"	5'10"	5'4"	3.7	420	7'5"	5'10"	5'4"	3.7	420	9'11"	5'10"	5'4"	4.9	540
36"	36"	8'5"	5'10"	5'4"	4.2	430	9'0"	5'10"	5'4"	4.5	460	12'11"	5'10"	5'4"	6.4	700
42"	24"	7'6"	6'3"	5'9"	4.1	445	7'6"	6'3"	5'9"	4.1	445	7'6"	6'3"	5'9"	4.1	445
42"	30"	7'6"	6'3"	5'9"	4.1	445	7'6"	6'3"	5'9"	4.1	445	9'3"	6'3"	5'9"	5.3	550
42"	36"	8'6"	6'3"	5'9"	4.9	500	8'6"	6'3"	5'9"	4.9	500	12'0"	6'3"	5'9"	6.9	710
42"	42"	8'6"	6'3"	5'9"	4.9	500	11'2"	6'3"	5'9"	6.4	640	15'10"	6'3"	5'9"	9.1	930
48"	24"	7'6"	6'10"	6'4"	5.3	490	7'6"	6'10"	6'4"	5.3	490	7'6"	6'10"	6'4"	5.3	490
48"	30"	7'6"	6'10"	6'4"	5.3	490	7'6"	6'10"	6'4"	5.3	490	8'6"	6'10"	6'4"	6.0	560
48"	36"	8'6"	6'10"	6'4"	6.0	560	8'6"	6'10"	6'4"	6.0	560	11'0"	6'10"	6'4"	7.8	710
48"	42"	8'6"	6'10"	6'4"	6.0	560	10'3"	6'10"	6'4"	7.2	660	14'7"	6'10"	6'4"	10.3	940
48"	48"	9'6"	6'10"	6'4"	6.7	610	13'3"	6'10"	6'4"	9.3	850	18'11"	6'10"	6'4"	13.3	1100

NOTE: 1. PRESSURE RANGES AS SHOWN ARE OPERATING PRESSURES. CONCRETE AND STEEL QUANTITIES ARE CALCULATED USING OPERATING PRESSURE PLUS 50 P.S.I.
2. CONCRETE AND STEEL QUANTITIES ARE FOR ESTIMATING PURPOSES ONLY.
3. IN LIEU OF STEEL REINFORCING BARS, THE CONTRACTOR HAS THE OPTION TO USE WELDED WIRE FABRIC SHEETS (12 X 12 – W5.8 X W5.8) @ 42 LBS. PER. 100 S.F.

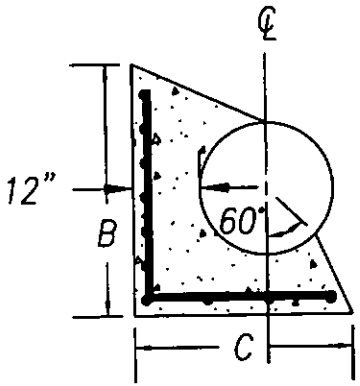

SECTION E–E

3/4" REINFORCING BARS TO BE PLACED 6" O.C. ON THRUST SIDE AND 12" O.C. ON BOTTOM.

TYPICAL BLOCKING DETAIL
CONCRETE PIPE TEES

CINCINNATI WATER WORKS
ENGINEERING DIVISION

DATE 10/26/96

APPROVED Paul E. Tomes

STANDARD DRAWING 102–4

SETTING ON ROADWAYS WITHOUT CURBS

4" I.D. CAST IRON PIPE, 6' LONG, TO BE FILLED WITH CONCRETE WITH EXPOSED PART TO BE MARKED WITH BLACK AND WHITE PAINTED STRIPES. GUARD POSTS TO BE INSTALLED AS INDICATED ON THE PLANS OR AS DIRECTED BY THE CINCINNATI WATER WORKS.

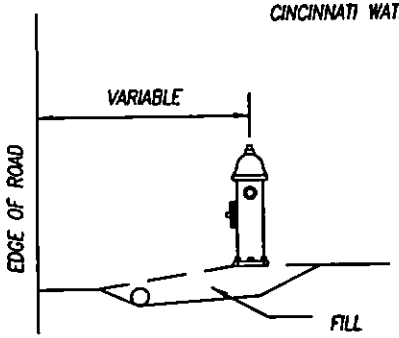

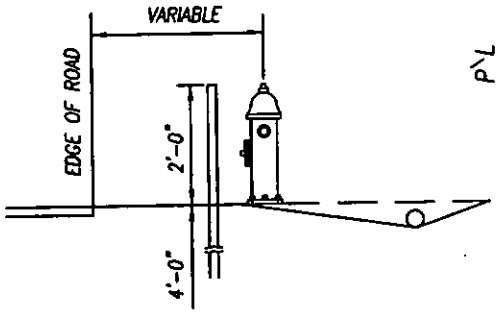

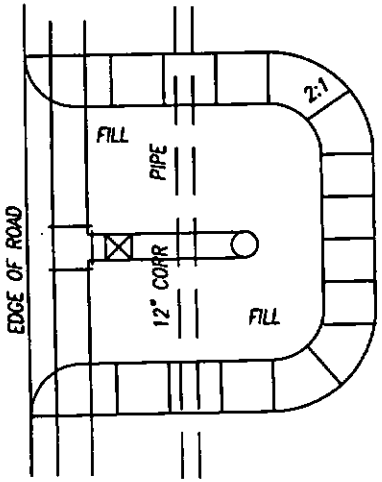

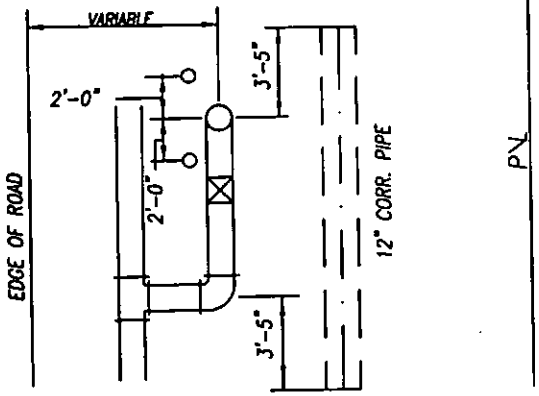

DRAIN PIPE WILL BE INSTALLED AT ALL TIMES WHEN HYDRANT LEAD IS WITHIN EXISTING OR PROPOSED DRAINAGE DITCH.

NOTE:

1. NO PART OF ANY FIRE HYDRANT SETTING SHALL BE CLOSER THAN 5'-0" TO ANY DRIVEWAY, SEWER INLET, UTILITY POLE, ANCHOR WIRE, OR SIDEWALK ENTRANCE.
2. THERE SHALL BE NO ADDITIONAL COMPENSATION FOR GUARD POST, DRAIN PIPE, OR GRADING WORK.

BATTERED OR STRAIGHT CURB

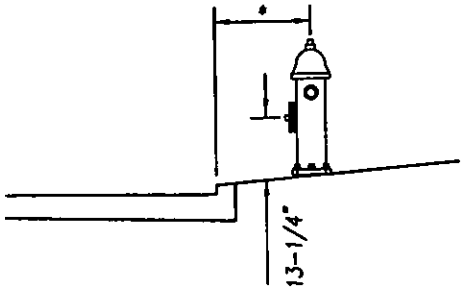

* AS INDICATED ON PLANS

ROLLED CURB

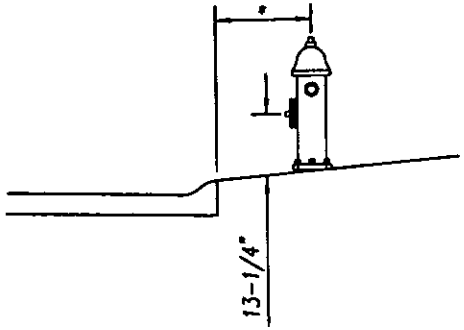

FIRE HYDRANT SETTING MEASUREMENTS		DATE 10/26/96
CINCINNATI WATER WORKS ENGINEERING DIVISION		
APPROVED Paul E. Tomson	STANDARD DRAWING 103-1	

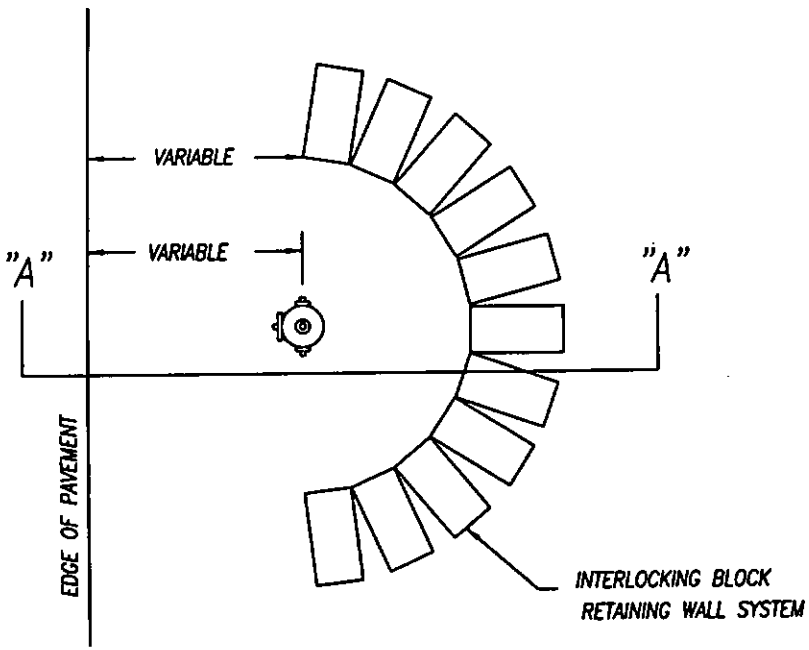

PLAN VIEW

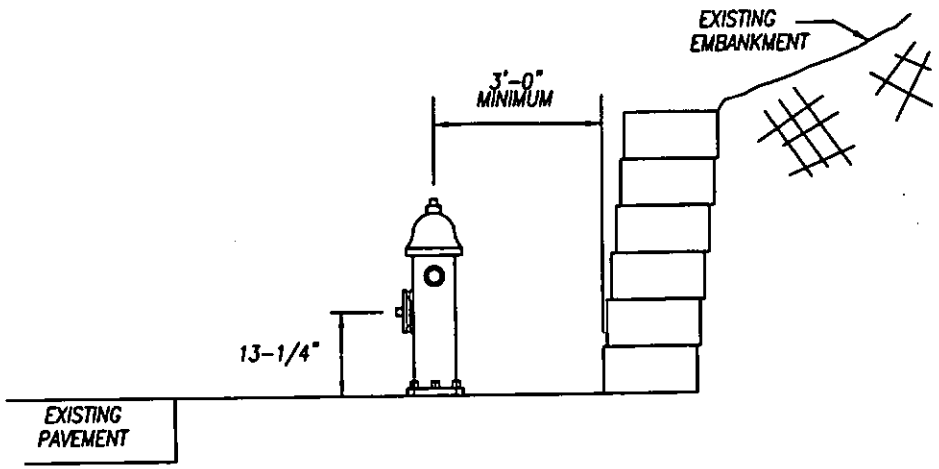

SECTION A-A

NOTE:

1. RETAINING WALL TO BE PROVIDED WHEN FIRE HYDRANT SETTING REQUIRES EXCAVATION INTO EXISTING EMBANKMENT
2. NO PART OF ANY FIRE HYDRANT SETTING SHALL BE CLOSER THAN 5'-0" TO ANY DRIVEWAY, SEWER INLET, UTILITY POLE, OR ANCHOR WIRE
3. KEYSTONE RETAINING WALL SYSTEM – STD. UNIT OR CINCINNATI WATER WORKS APPROVED EQUAL

RETAINING WALL FOR FIRE HYDRANT SETTING		
CINCINNATI WATER WORKS ENGINEERING DIVISION		DATE 10/26/96
APPROVED Paul E. Toma	STANDARD DRAWING 103-1A	

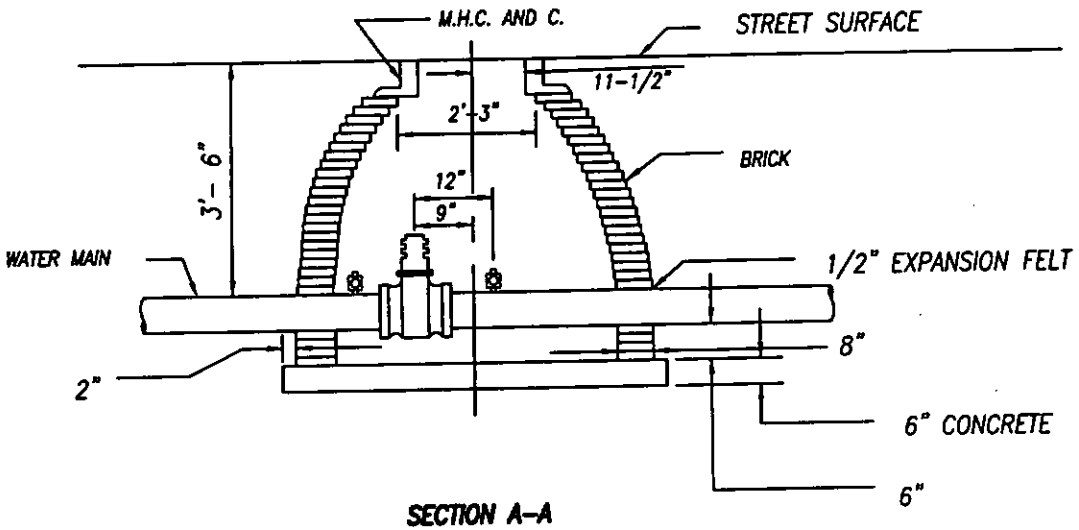

SECTION A–A

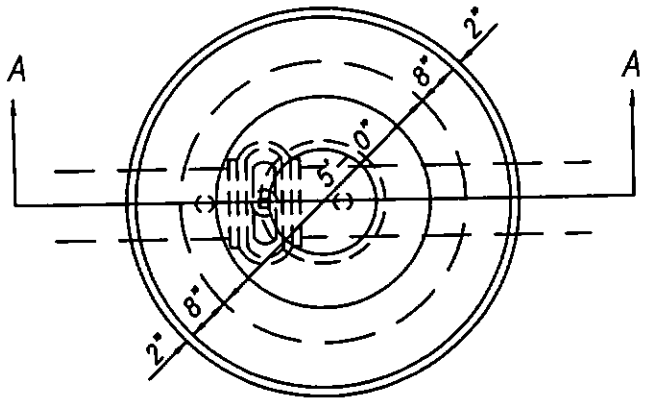

PLAN

NOTE:

1. WHERE WATER PRESSURE IS OVER 100 P.S.I., REFER TO STANDARD DRAWING 104-6 & 104-6A FOR CONSTRUCTION OF 12" VALVE CHAMBER.
2. OHSHA APPROVED STEPS @ 15" O.C. SHALL BE INSTALLED IN ALL CHAMBERS/VAULTS WHERE THE DEPTH OF COVER ON THE WATER MAIN IS GREATER THAN 6.0'.
3. 1/2" EXPANSION FELT AROUND MAIN THE FULL THICKNESS OF CHAMBER WALL.
4. 1" FERRULES FURNISHED AND INSTALLED BY CONTRACTOR.

VALVE CHAMBER 4" TO 12"		
CINCINNATI WATER WORKS ENGINEERING DIVISION		DATE 10/26/96
APPROVED Paul E. Torma	STANDARD DRAWING 104-1	

NOTE: PRECAST REINFORCED CONCRETE CHAMBER SHALL MEET ODOT SPECIFICATION 706.13 AND ASTM SPECIFICATION C-478.

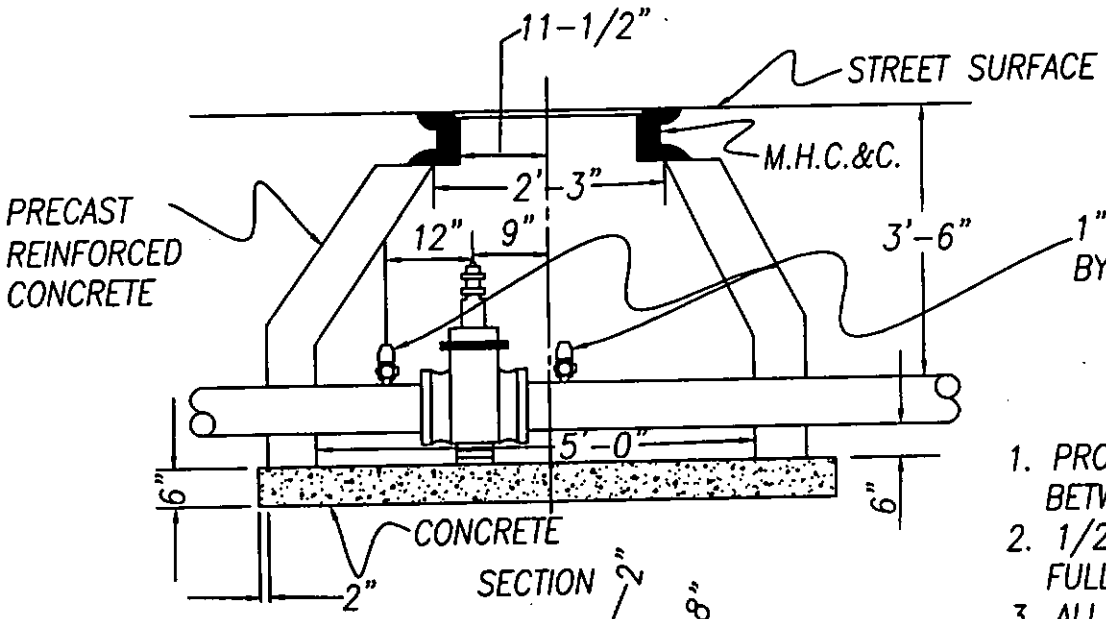

1. PROVIDE A MINIMUM OF 2-1/2" CLEARANCE BETWEEN PRECAST CHAMBER AND PIPE.
2. 1/2" EXPANSION FELT AROUND PIPE THE FULL THICKNESS OF THE CHAMBER WALL.
3. ALL OPENINGS AROUND PIPE SHALL BE THOROUGHLY GROUTED WITH CEMENT MORTAR.

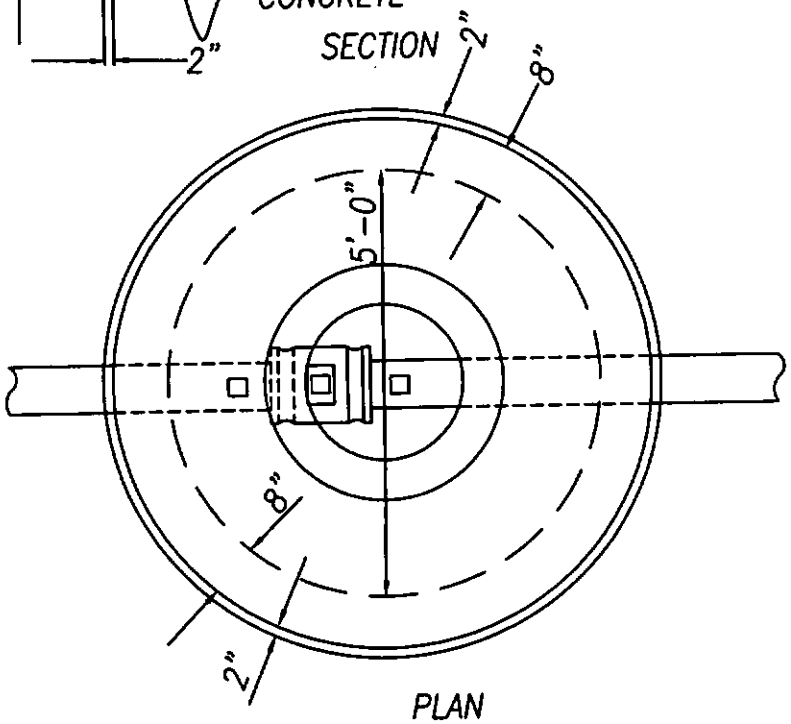

VALVE CHAMBER 4" TO 12" (PRE-CAST)		
CINCINNATI WATER WORKS ENGINEERING DIVISION		DATE 10/26/96
APPROVED Paul E. Tom	STANDARD DRAWING 104-1A	

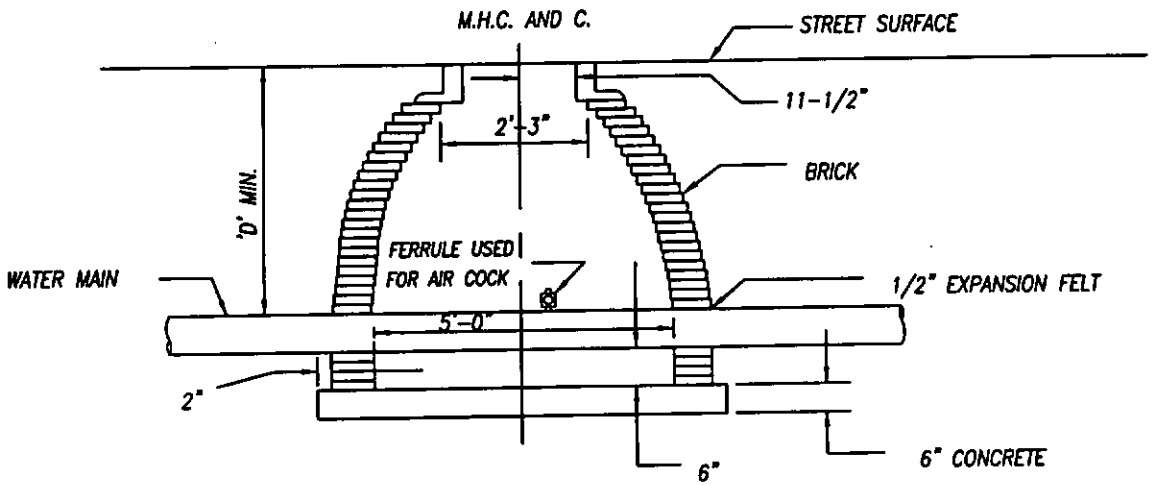

SECTION A-A

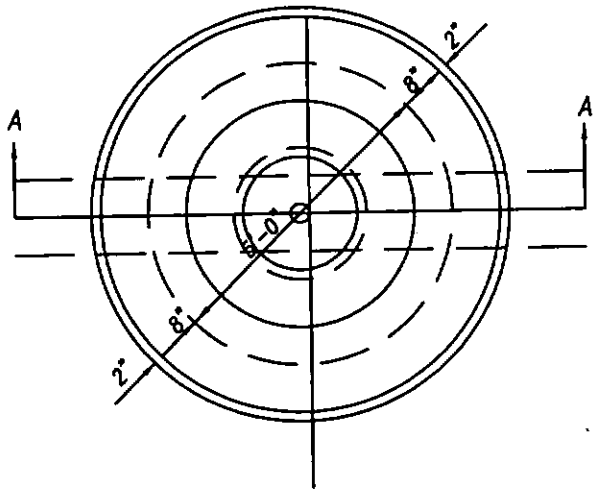

PLAN

WATER MAIN SIZE	SIZE OF FERRULE	'D' MIN
12" W.M. & UNDER	1"	3'-6"
LARGER THAN 12"	1-1/2" OR 2"	4'-0"

AIR COCK CHAMBER

CINCINNATI WATER WORKS
ENGINEERING DIVISION

DATE 10/26/96

APPROVED Paul E. Tomes

STANDARD DRAWING 104-2

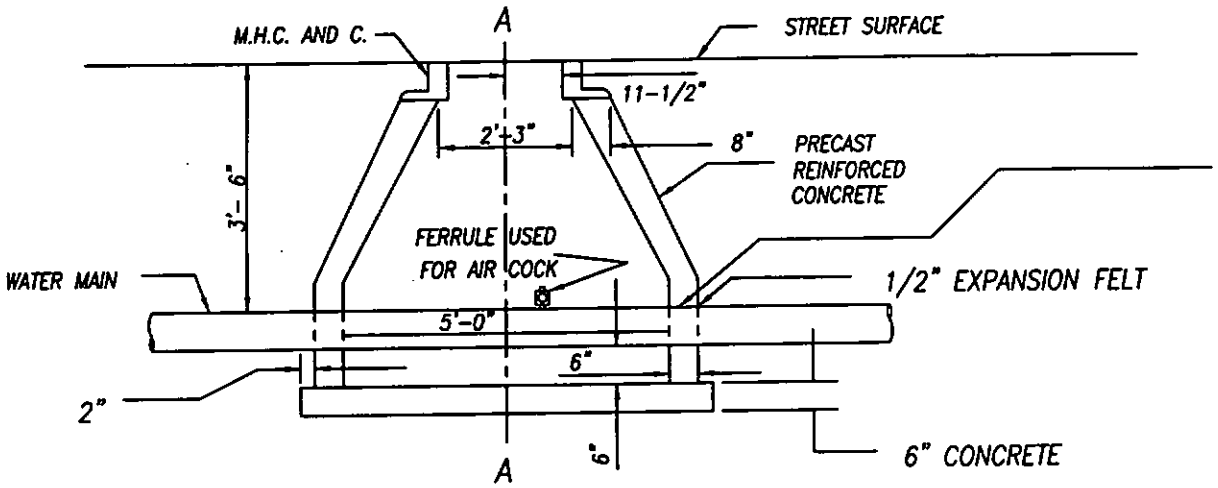

SECTION

1. PROVIDE A MINIMUM OF 2-1/2" CLEARANCE BETWEEN PRECAST CHAMBER AND PIPE.
2. 1/2" EXPANSION FELT AROUND PIPE THE FULL THICKNESS OF THE CHAMBER WALL.
3. ALL OPENINGS AROUND PIPE SHALL BE THOROUGHLY GROUTED WITH CEMENT MORTAR.

NOTE : PRECAST REINFORCED CONCRETE CHAMBER SHALL MEET ODOT SPECIFICATION 706.13 AND ASTM SPECIFICATION C-478.

WATER MAIN SIZE	SIZE OF FERRULE
12" W.M. & UNDER	1"
LARGER THAN 12"	1-1/2" OR 2"

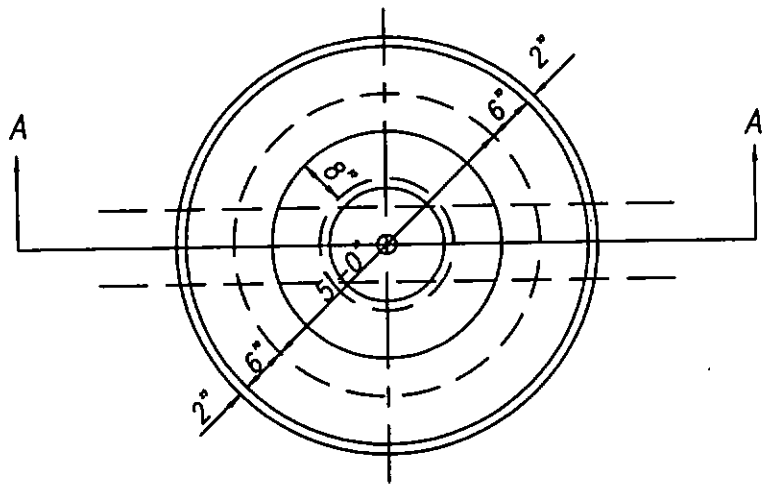

PLAN

AIR COCK CHAMBER (PRE-CAST)

CINCINNATI WATER WORKS
ENGINEERING DIVISION

DATE 10/26/96

APPROVED Paul E. Tomm

STANDARD DRAWING 104-2A

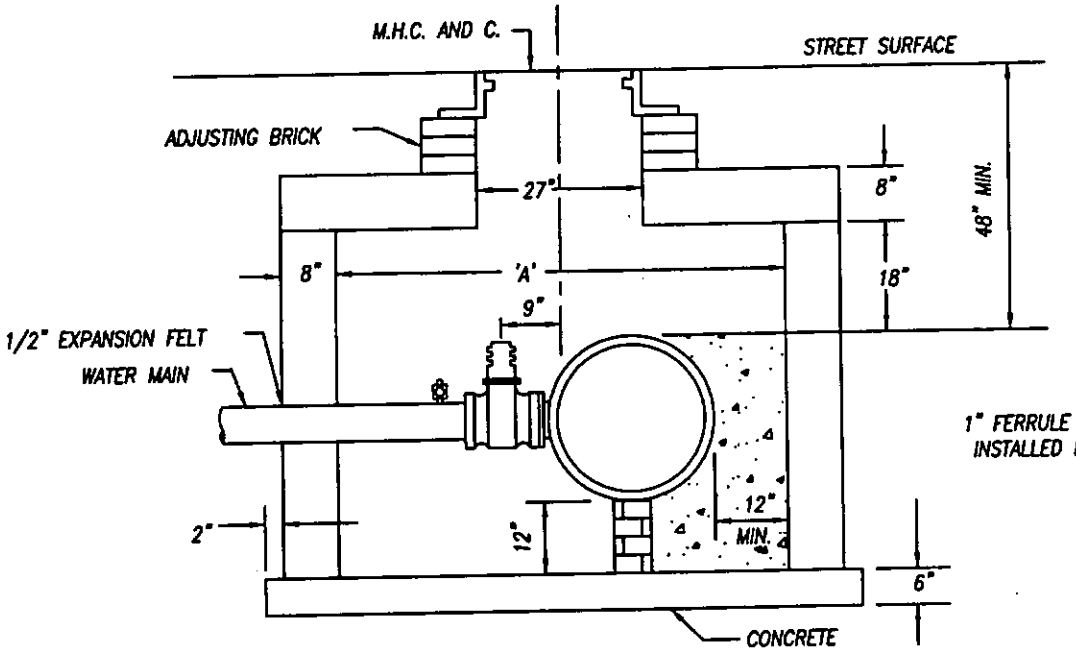

1" FERRULE FURNISHED AND INSTALLED BY CONTRACTOR.

1/2" EXPANSION FELT AROUND MAIN. THE FULL THICKNESS OF CHAMBER WALL.

SECTION

PLAN

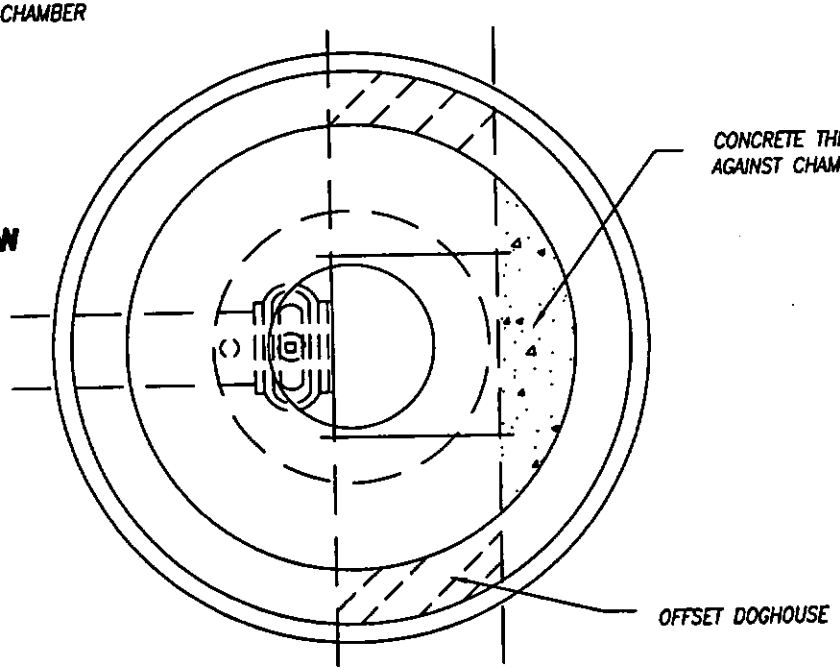

NOTE:

1. PRECAST REINFORCED CONCRETE CHAMBER SHALL MEET ODOT SPECIFICATION 706.13 AND ASTM SPECIFICATION C-478.
2. AT LEAST 1/2" THICK EXPANSION FELT AROUND ALL PIPES THRU CHAMBER WALL FOR THE FULL THICKNESS OF THE WALL

SIZE OF CONNECTION	'A'
6"x 4" TO 6"x 6"	5'-0"
8"x 4" TO 8"x 8"	5'-0"
10"x 4" TO 10"x 10"	5'-0"
12"x 4" TO 12"x 12"	6'-0"
16"x 4" TO 16" TO 12"	6'-0"

6" – 18" FLANGED OUTLET & TAPPING VALVE CHAMBER

CINCINNATI WATER WORKS
ENGINEERING DIVISION

DATE 10/30/96

APPROVED Paul E. Tome

STANDARD DRAWING 104-3

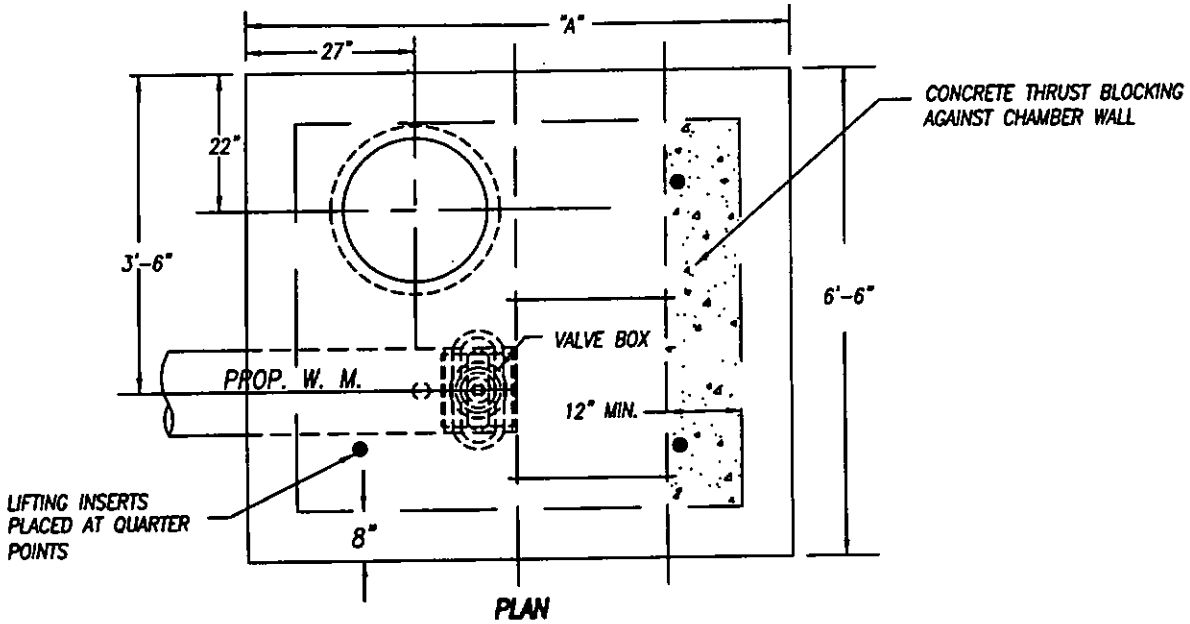

PLAN

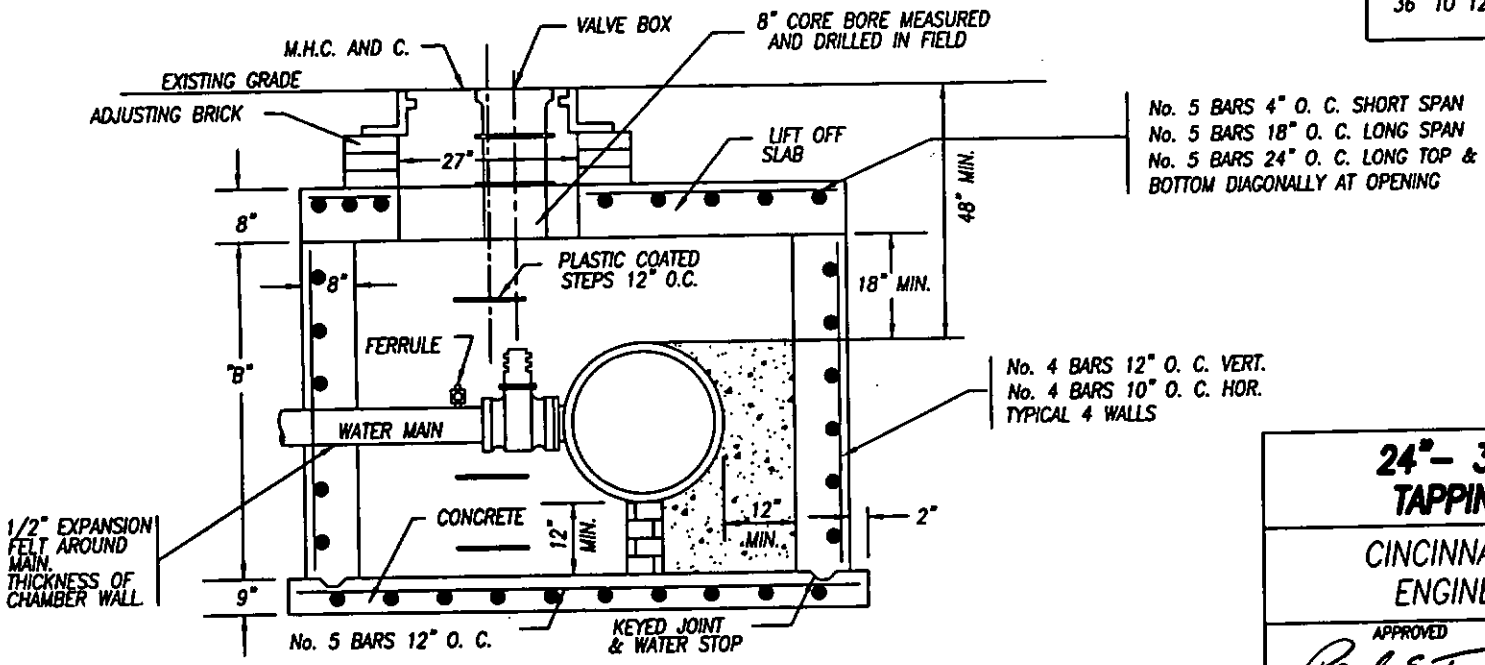

SECTION

NOTE:

1. PRECAST REINFORCED CONCRETE CHAMBER SHALL MEET ODOT SPECIFICATION 706.13 AND ASTM SPECIFICATION C-478.
2. AT LEAST 1/2" THICK EXPANSION FELT AROUND ALL PIPES THRU CHAMBER WALL FOR THE FULL THICKNESS OF THE WALL

1" FERRULE FURNISHED AND INSTALLED BY CONTRACTOR.

SIZE OF CONNECTION	"A"	"B"
24"x 8" TO 24"x 12"	7'-3"	5'-0"
30"x 12"	7'-9"	5'-6"
36" TO 12"	8'-3"	6'-2"

24"- 36" FLANGED OUTLET & TAPPING VALVE CHAMBER

CINCINNATI WATER WORKS
ENGINEERING DIVISION

DATE 10/31/96

APPROVED Paul E Tomes

STANDARD DRAWING 104-3A

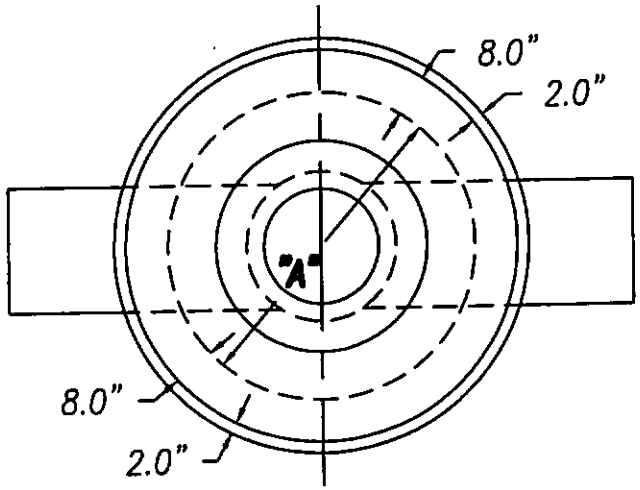

PLAN

NOTE: PRECAST REINFORCED CONCRETE CHAMBER SHALL MEET ODOT SPECIFICATION 706.13 AND ASTM SPECIFICATION C-478

SIZE	A
24"	5.0'
30"	6.0'
36"	6.0'
42"	7.0'
48"	7.0'

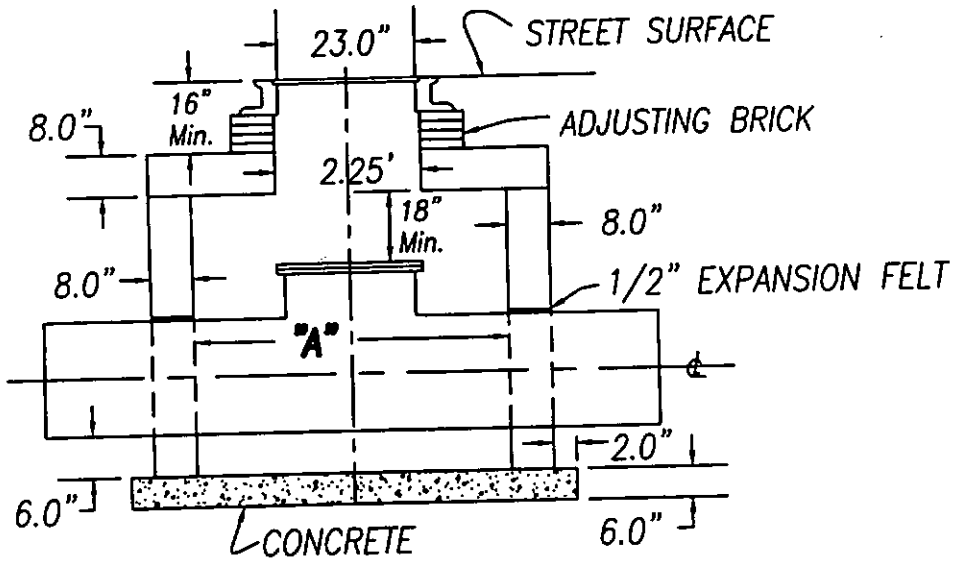

SECTION

STANDARD MANHEAD CHAMBER		
CINCINNATI WATER WORKS ENGINEERING DIVISION		DATE 11-16-96
APPROVED Paul E. Tomm	STANDARD DRAWING 104-4	

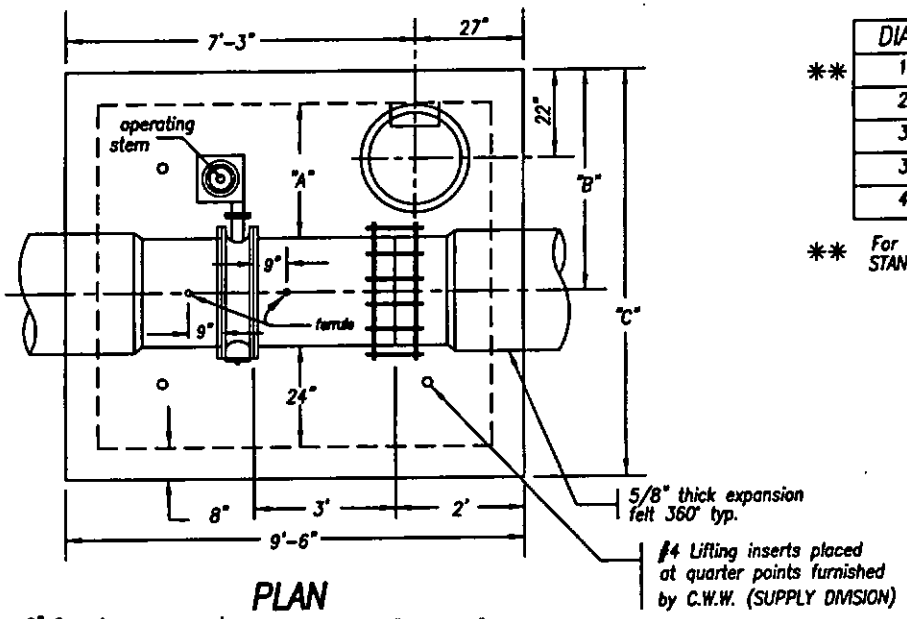

PLAN

	DIAMETER	"A"	"B"	"C"	"D"	"E"
**	16 inch	30"	3'-11"	7'-4"	5'-6"	6'-11"
	24 inch	30"	4'-3"	8'-0"	6'-2"	7'-7"
	30 inch	30"	4'-6"	8'-6"	6'-8"	8'-1"
	36 inch	36"	5'-3"	9'-6"	7'-2"	8'-7"
	42 inch	36"	5'-6"	10'-0"	7'-8"	9'-1"

** For 16" Precast Butterfly Chamber see STANDARD DRAWING 104-5B

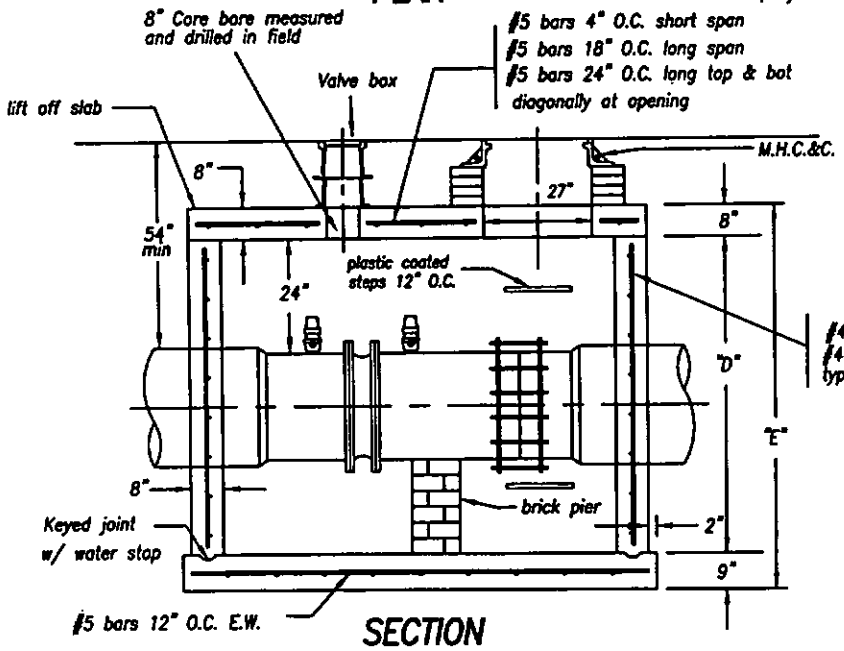

SECTION

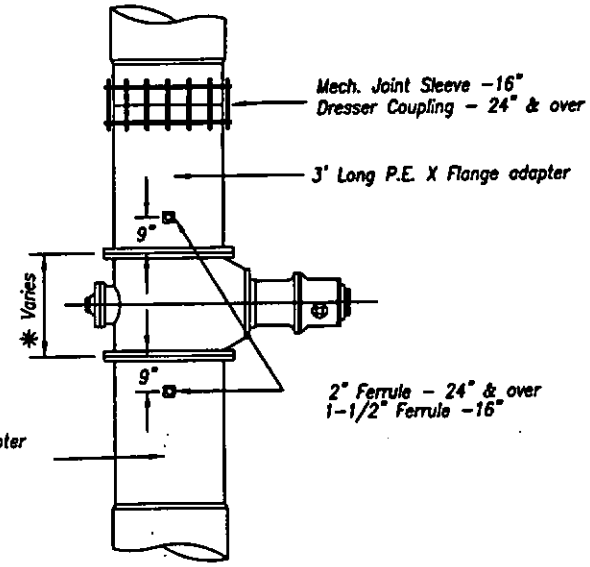

* Laying Length of Valve Depends Upon Manufacturer and Size

BUTTERFLY VALVE CHAMBER POURED IN PLACE

CINCINNATI WATER WORKS
ENGINEERING DIVISION

DATE 11/2/96

APPROVED Paul E. Tom

STANDARD DRAWING 104-5A

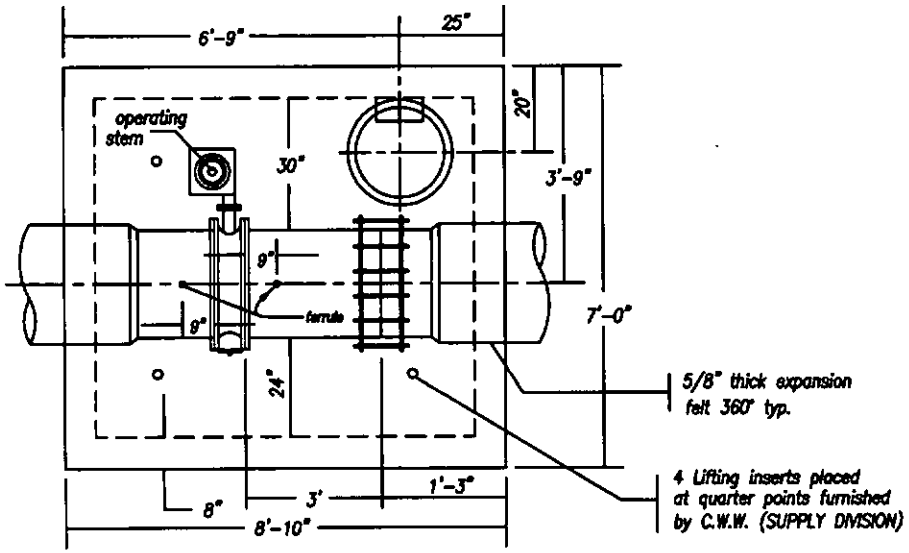

PLAN

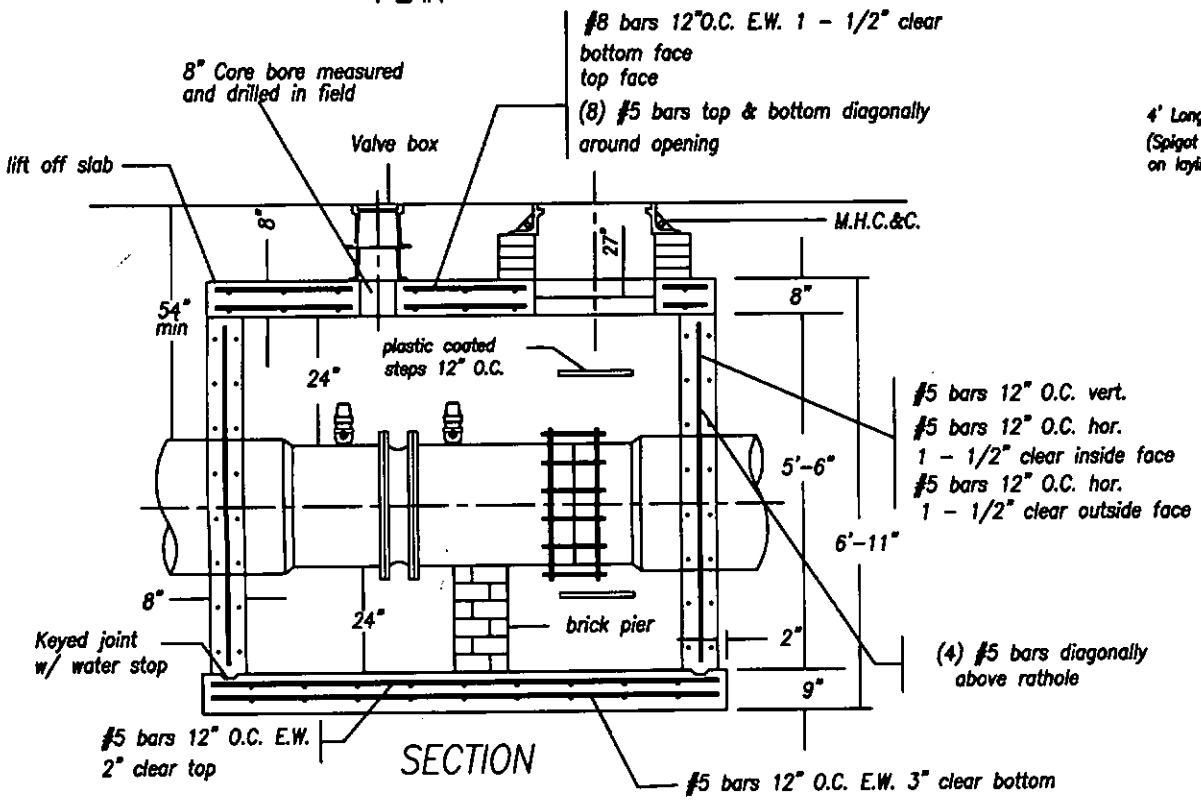

SECTION

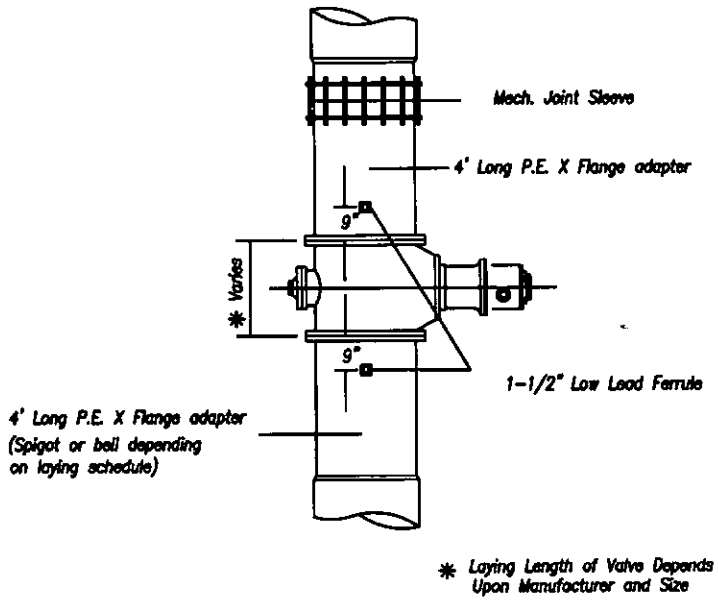

BUTTERFLY VALVE VAULT 16" PRECAST		
CINCINNATI WATER WORKS ENGINEERING DIVISION		DATE 5-12-06
APPROVED	STANDARD DRAWING 104-5B	

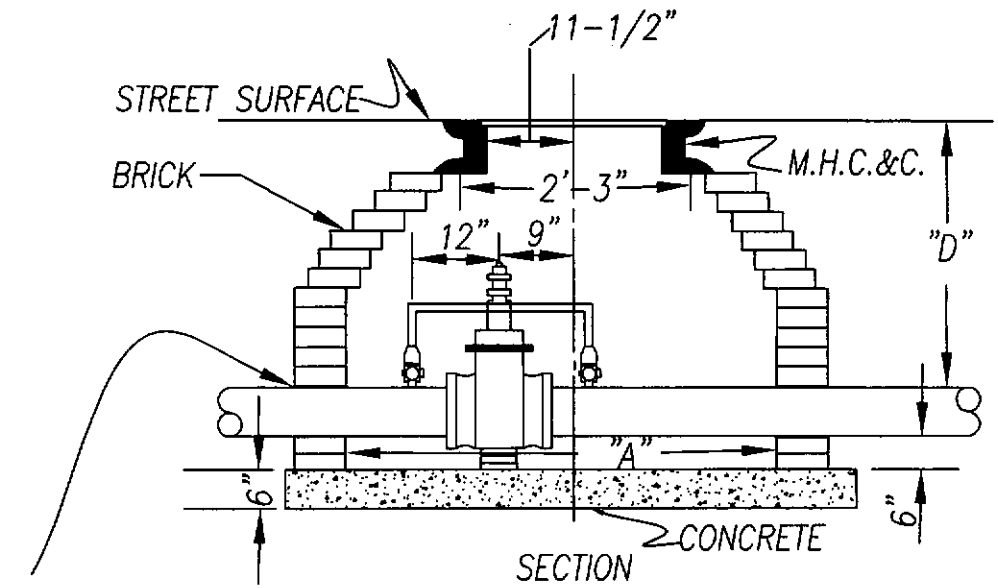

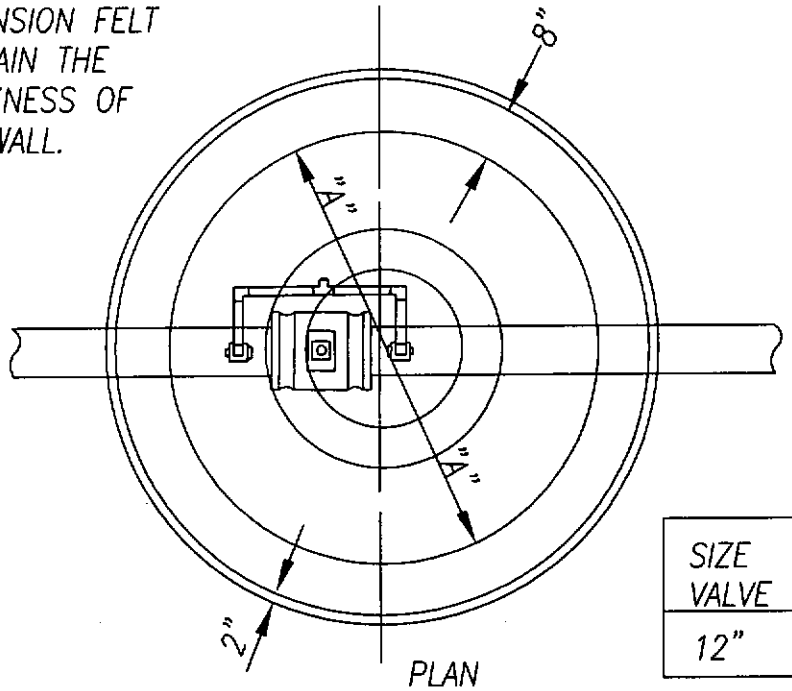

LOW LEAD BY-PASS PIPING MATERIAL

8- LIN. FT. 1" COPPER SERVICE PIPE
2- 1" FERRULES
4- 1" 90. ELLS (SWEAT FITTING)
1- 1" BRASS TEE (SWEAT x FEMALE IRON PIPE THREADED OUTLET)
1- 1" BRASS PLUG (IRON PIPE THREAD)

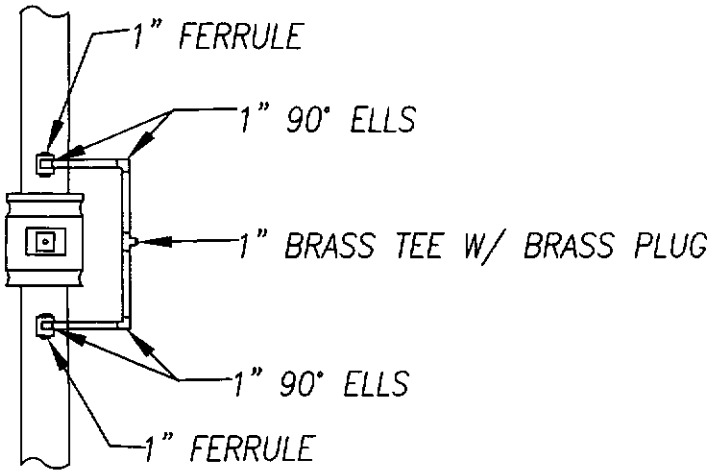

BY-PASS ASSEMBLY DETAIL

NOTE:
BY-PASS MATERIAL FURNISHED AND INSTALLED BY CONTRACTOR.

SIZE VALVE	"A"	"D"
12"	5'-0"	3'-6"

12" VALVE CHAMBER FOR WATER PRESSURE OVER 100 P.S.I.

CINCINNATI WATER WORKS
ENGINEERING DIVISION

DATE 5-12-06

APPROVED

STANDARD DRAWING 104-6

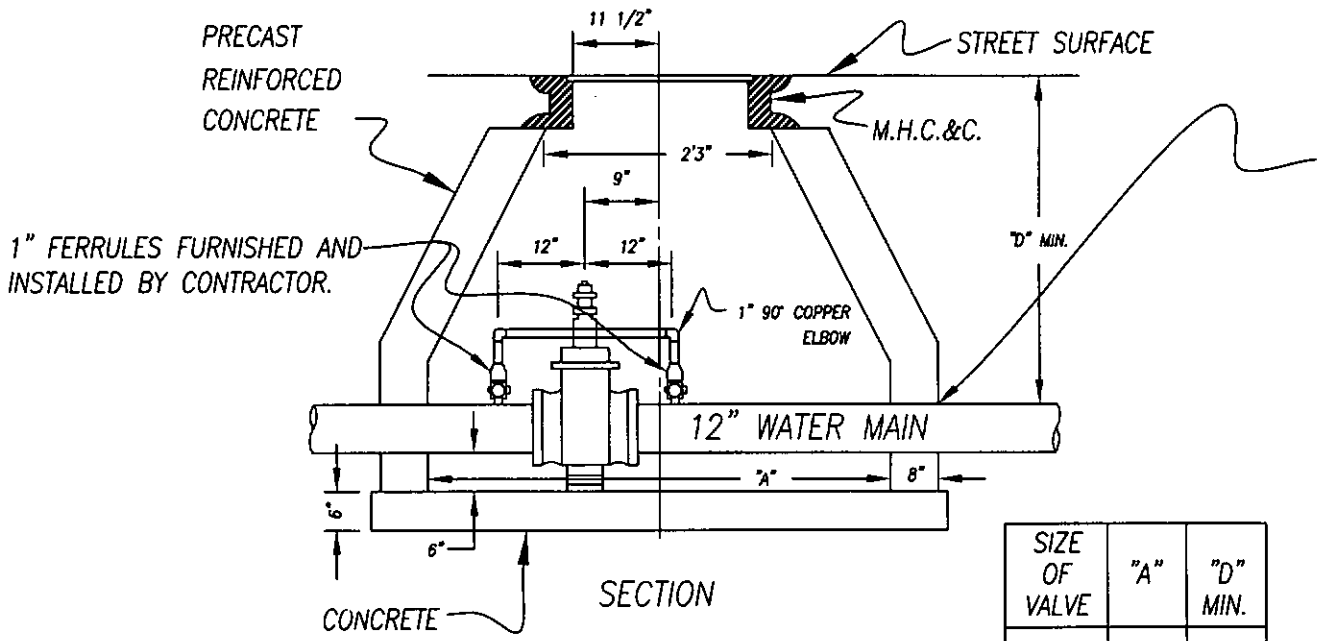

SECTION

NOTE: PRECAST REINFORCED CONCRETE CHAMBER SHALL MEET ODOT SPECIFICATION 706.13 AND ASTM SPECIFICATION C-478

1. PROVIDE A MINIMUM OF 2 1/2" CLEARANCE BETWEEN PRECAST CHAMBER AND PIPE.
2. 1/2" EXPANSION FELT AROUND PIPE THE FULL THICKNESS OF THE CHAMBER WALL.
3. ALL OPENINGS AROUND PIPE SHALL BE THOROUGHLY GROUTED WITH CEMENT MORTAR.

SIZE OF VALVE	"A"	"D" MIN.
12"	5'0"	3'6"

LOW LEAD BY-PASS MATERIAL

8-LIN. FT. 1" COPPER SERVICE PIPING
2-1" FERRULES
4-1" 90° ELLS (SWEAT FITTINGS)
1-1" BRASS TEE (SWEAT X FEMALE WITH IRON PIPE THREADED OUTLET)
1-1" BRASS PLUG (IRON PIPE THREADED)

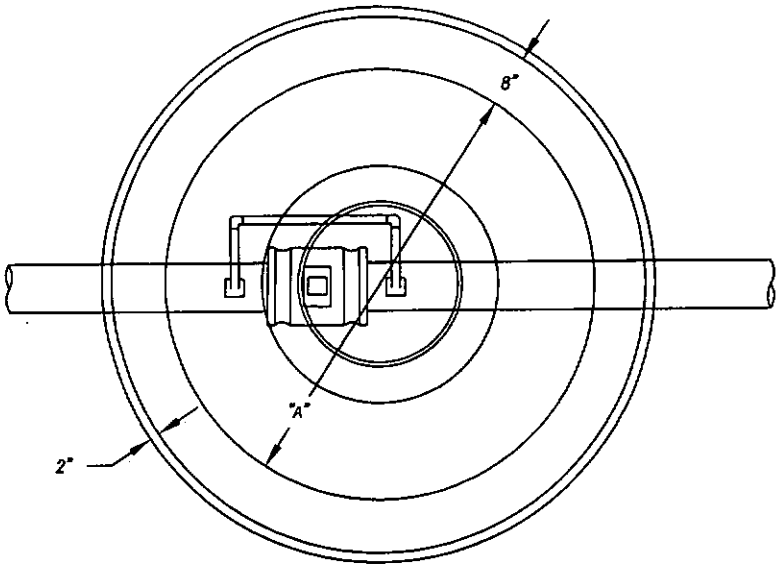

PLAN

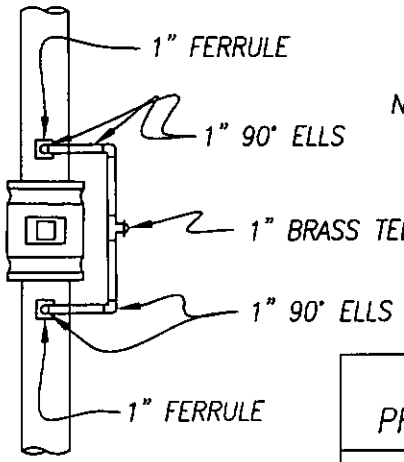

BY-PASS ASSEMBLY DETAIL

NOTE: MATERIALS FURNISHED AND INSTALLED BY CONTRACTOR.

12" VALVE CHAMBER FOR WATER PRESSURE OVER 100 P.S.I. (PRE-CAST)

CINCINNATI WATER WORKS
ENGINEERING DIVISION

DATE 5-12-06

APPROVED

STANDARD DRAWING 104-6A

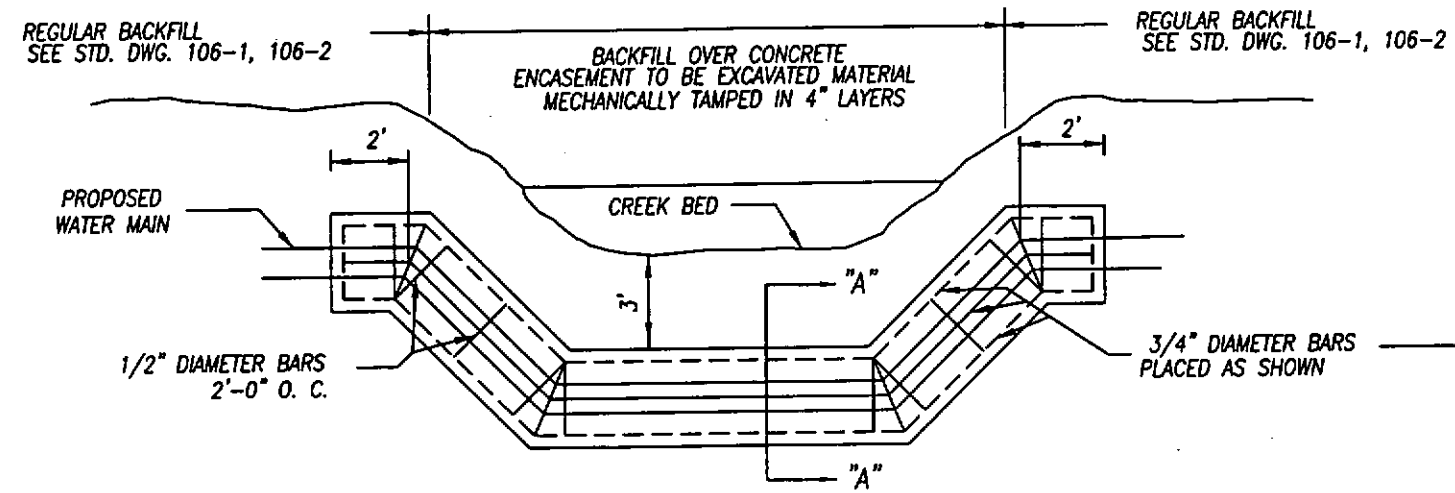

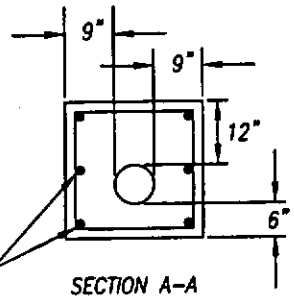

MATERIAL

CONCRETE CLASS "C" – ITEM 1110
STEEL REINFORCING – DEFORMED
INTERMEDIATE GRADE – ITEM 509

NOTE: IN LIEU OF STEEL REINFORCING BARS, THE CONTRACTOR HAS THE OPTION TO USE WELDED WIRE FABRIC SHEETS (12 X 12- W 5.8 X W 5.8) AT 42 LBS. PER 100 SQ. FT.

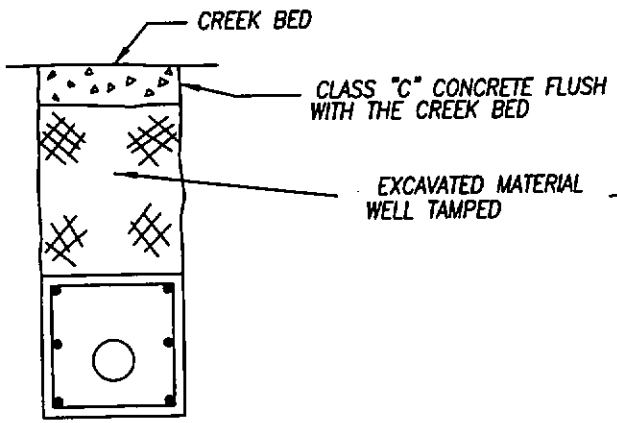

BACKFILL AND RESTORATION
IN ROCK EXCAVATION

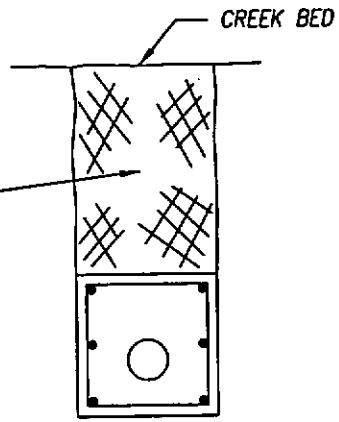

BACKFILL AND RESTORATION
IN NORMAL EXCAVATION

NOTE: 6" CONCRETE PAD TO EXTEND TO WIDTH OF CREEK BED ONLY

STANDARD CREEK CROSSING CONCRETE ENCASEMENT		
CINCINNATI WATER WORKS ENGINEERING DIVISION		DATE 11/2/96
APPROVED Paul E. Tom	STANDARD DRAWING 105-1	

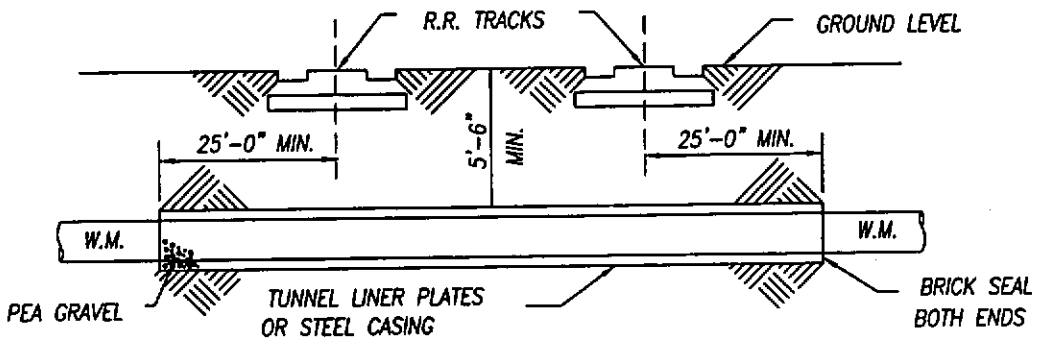

RAILROAD CROSSING

TUNNEL LINER PLATES FOR 16" W.M.'S AND LARGER	
PIPE SIZE	LINER PLATE DIA.
16"	60"
20"	66"
24"	72"
30"	78"
36"	84"
42"	90"
48"	96"

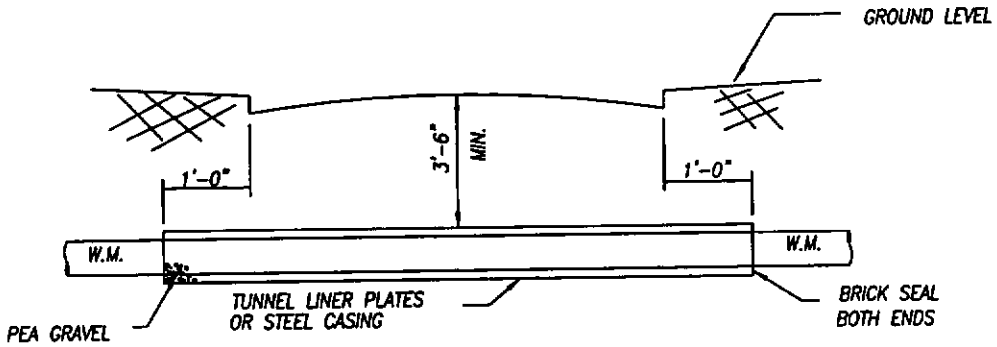

HIGHWAY CROSSING
CROSSING PROVISIONS

STEEL CASING FOR 24" W.M. & SMALLER & FOR BRANCHES 4" & LARGER				
PIPE SIZE	RAILROAD		HIGHWAY	
	CASING O.D.	PLATE THICKNESS	CASING O.D.	PLATE THICKNESS
4"	14"	3/8"	14"	5/16"
6"	18"	3/8"	16"	5/16"
8"	20"	3/8"	18"	5/16"
10"	22"	3/8"	20"	5/16"
12"	24"	3/8"	24"	5/16"
16"	30"	7/16"	30"	3/8"
24"	42"	7/16"	42"	7/16"

CASING PIPE MAY HAVE A PLATE THICKNESS 1/16" LESS THAN AS LISTED ABOVE IF IT IS CATHODICALLY PROTECTED.

TUNNEL LINER PLATES (ITEM 1107) AND STEEL CASING (ITEM 1108) INSTALLATIONS TO BE IN ACCORDANCE WITH THE CITY OF CINCINNATI'S SUPPLEMENT TO STATE OF OHIO, DEPARTMENT OF HIGHWAY CONSTRUCTION AND MATERIAL SPECIFICATIONS. TUNNEL LINER GAGE SHALL BE DESIGNED AND SUBMITTED TO CINCINNATI WATER WORKS FOR APPROVAL ON A PROJECT BY PROJECT BASIS.

ALL WATER MAIN JOINTS WITHIN CASING OR TUNNEL LINER TO BE RESTRAINED.

ALL PIPE WITHIN CASING SHALL BE INSTALLED WITH CASING INSULATORS WITH 2" WIDE GLASS REINFORCED RUNNER (PSI MODEL A12 OR APPROVED EQUAL) WITH 2-INSULATORS PER PIPE SECTION. (ALL INSULATORS TO BE PRE APPROVED BY C.W.W.)

COMPLETELY FILL ALL VOIDS BETWEEN THE OUTSIDE OF THE PIPE AND THE CASING WITH PEA GRAVEL.

HIGHWAY & RAILROAD CASING CROSSING

CINCINNATI WATER WORKS
ENGINEERING DIVISION

DATE 11/2/96

APPROVED Paul E. Tome

STANDARD DRAWING 105-2

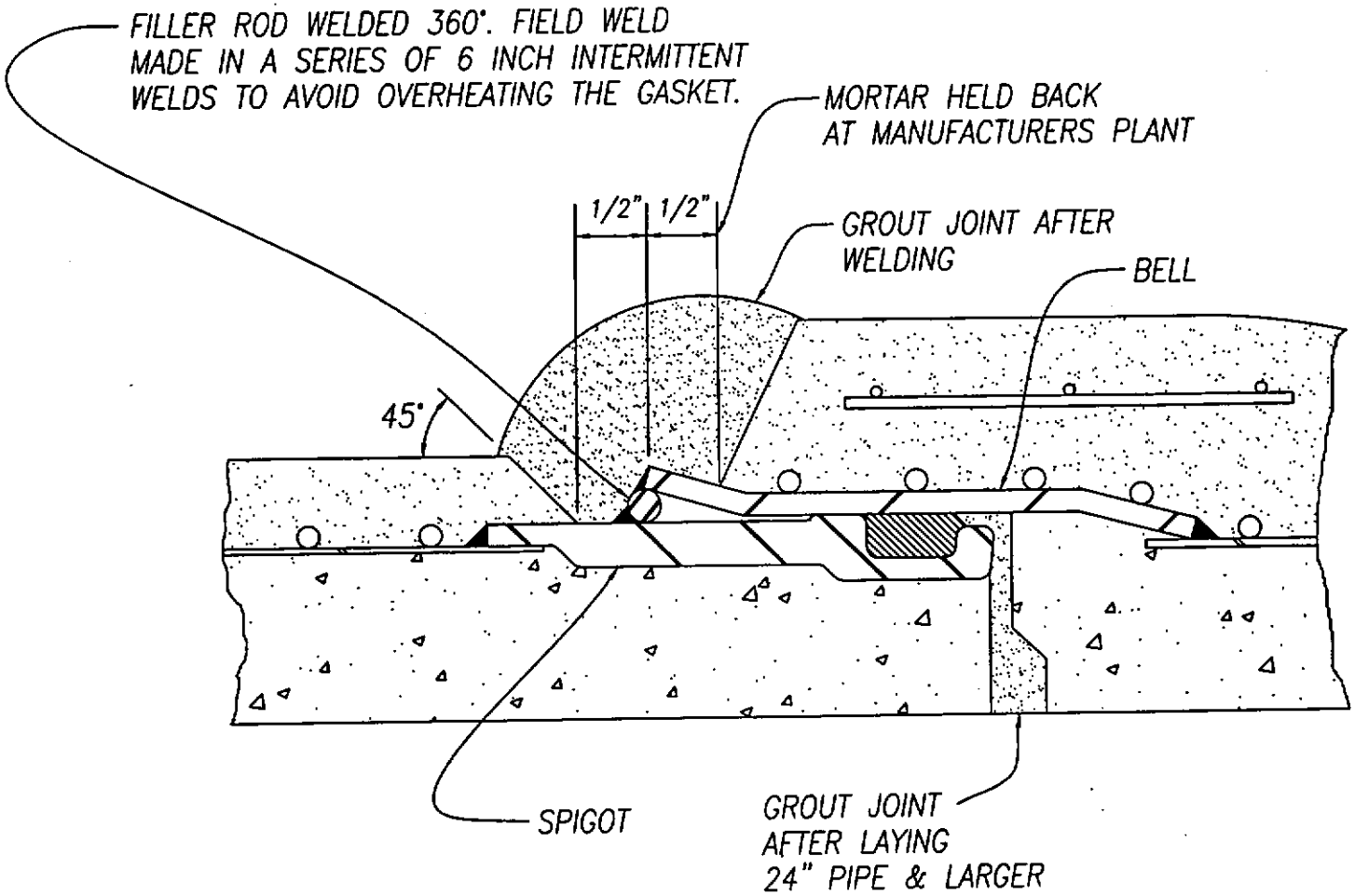

WELDED TYPE TIED JOINT CONCRETE PIPE

CINCINNATI WATER WORKS
ENGINEERING DIVISION

DATE 10/26/96

APPROVED Paul E. Tome

STANDARD DRAWING 105-3

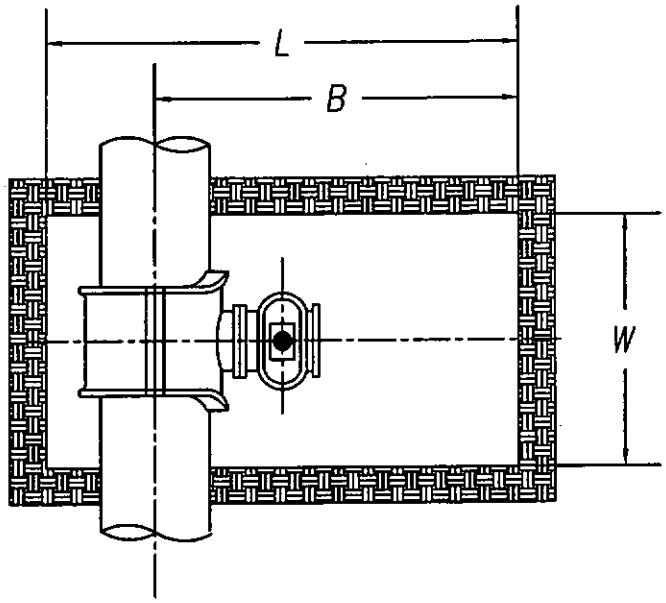

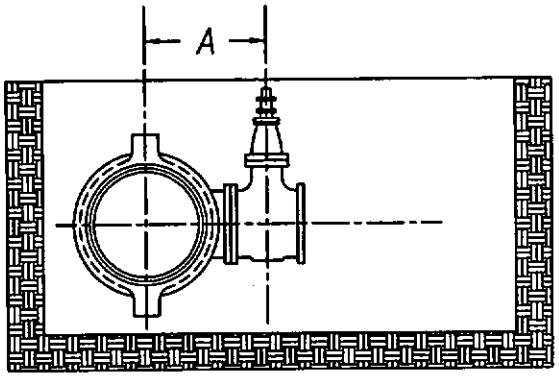

SIZE	A	B	W	L
6 X 4	13"	6'-8"	4'-11"	8'-8"
6 X 6	14-1/16"	6'-10"	5'-1"	8'-10"
8 X 4	13-7/8"	6'-9"	4'-11"	8'-10"
8 X 6	15-7/16"	7'-0"	5'-1"	9'-1"
8 X 8	16-11/16"	7'-2"	5'-3"	9'-4"
10 X 4	15	6'-10"	4'-11"	9'-0"
10 X 6	16-9/16"	7'-1"	5'-1"	9'-3"
10 X 8	17-9/16"	7'-3"	5'-3"	9'-6"
10 X 10	17-13/16"	7'-4"	5'-5"	9'-7"
12 X 4	16-1/4"	6'-11"	4'-11"	9'-2"
12 X 6	17-15/16"	7'-2"	5'-1"	9'-6"
12 X 8	18-13/16"	7'-4"	5'-3"	9'-7"
12 X 10	19-3/16"	7'-5"	5'-5"	9'-8"
12 X 12	19-5/16"	7'-6"	5'-7"	9'-9"
16 X 4	19-5/16"	7'-3"	4'-11"	9'-8"
16 X 6	20-3/4"	7'-6"	5'-1"	9'-11"
16 X 8	21-7/8"	7'-8"	5'-3"	10'-1"
16 X 10	22-1/4"	7'-7"	5'-5"	10'-2"
16 X 12	22-9/16"	7'-9"	5'-7"	10'-4"

SIZE	A	B	W	L
20 X 4	21-1/2"	7'-5"	4'-11"	10'-0"
20 X 6	22-15/16"	7'-8"	5'-1"	10'-3"
20 X 8	24-1/16"	7'-10"	5'-3"	10'-5"
20 X 10	24-7/16"	7'-10"	5'-5"	10'-5"
20 X 12	24-5/8"	7'-11"	5'-7"	10'-6"
24 X 4	23-11/16"	7'-7"	4'-11"	10'-4"
24 X 6	25-1/8"	7'-10"	5'-1"	10'-7"
24 X 8	26-1/4"	8'-0"	5'-3"	10'-9"
24 X 10	26-5/8"	8'-1"	5'-5"	10'-10"
24 X 12	26-13/16"	8'-1"	5'-7"	10'-10"
30 X 4	27-3/16"	7'-11"	4'-11"	10'-11"
30 X 6	28-3/8"	8'-1"	5'-1"	11'-1"
30 X 8	29-3/4"	8'-3"	5'-3"	11'-3"
30 X 10	30-1/8"	8'-4"	5'-5"	11'-4"
30 X 12	30-5/16"	8'-4"	5'-7"	11'-4"
36 X 4	30-1/2"	8'-2"	4'-11"	11'-6"
36 X 6	31-15/16"	8'-5"	5'-1"	11'-9"
36 X 8	33-3/16"	8'-6"	5'-3"	11'-10"
36 X 10	33-7/16"	8'-6"	5'-5"	11'-10"
36 X 12	33-5/8"	8'-7"	5'-7"	11'-11"

EXCAVATION FOR WATER WORKS CONNECTIONS

CINCINNATI WATER WORKS
ENGINEERING DIVISION

DATE
10/20/96

APPROVED
Paul E. Toma

STANDARD DRAWING
105-4

TAPE MATERIAL
POLYETHYLENE TAPE 1-1/2" WIDE AS RECOMMENDED BY THE FILM MANUFACTURER.

MATERIAL SPECIFICATIONS
IN ACCORDANCE WITH ASTM D-1248 TYPE I, CLASS A OR C, GRADE E-1 FLOW RATE 0.4 MAX, DIELECTRIC STRENGTH VOLUME RESISTIVITY MIN. OHM-CM^3=10^16
POLYETHYLENE FILM THICKNESS 8 MILS

TENSILE STRENGTH	1200 P.S.I. MIN
ELONGATION	300% MIN
DIELECTRIC STRENGTH	800 VOLTS/MIL

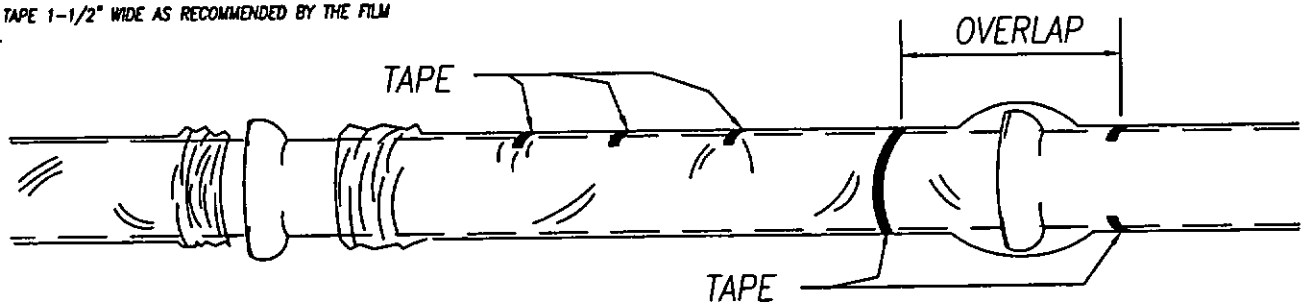

THE FOLLOWING METHOD ILLUSTRATES THE PROCEDURE FOR APPLYING POLYETHYLENE:

CUT POLYETHYLENE TUBE TO A LENGTH APPROXIMATELY TWO FEET LONGER THAN THE LENGTH OF THE PIPE SECTION, SLIP THE TUBE AROUND THE PIPE, CENTERING IT TO PROVIDE A ONE-FOOT OVERLAP ON EACH ADJACENT PIPE SECTION, AND BUNCHING IT ACCORDION FASHION LENGTHWISE UNTIL IT CLEARS THE PIPE ENDS.

LOWER THE PIPE INTO THE TRENCH AND MAKE THE PIPE JOINT WITH THE PRECEDING SECTION OF PIPE. A SHALLOW BELL HOLE MUST BE MADE AT THE JOINTS TO FACILITATE INSTALLATION OF THE POLYETHYLENE TUBE.

AFTER ASSEMBLING THE PIPE JOINT, MAKE THE OVERLAP OF THE POLYETHYLENE TUBE, PULL THE BUNCHED POLYETHYLENE FROM THE PRECEDING LENGTH OF PIPE, SLIP IT OVER THE END OF THE NEW LENGTH OF PIPE AND SECURE IT IN PLACE. THEN SLIP THE END OF THE POLYETHYLENE FROM THE NEW PIPE SECTION OVER THE END OF THE PRECEDING LENGTH OF PIPE, SECURE THE OVERLAP IN PLACE, TAKE UP THE SLACK WIDTH TO MAKE IT SNUG, BUT NOT TO TIGHT, FIT ALONG THIS BARREL OF PIPE, SECURING THE FOLD AT QUARTER POINTS.

REPAIR ANY RIPS, PUNCTURES, OR OTHER DAMAGE TO THE POLYETHYLENE WITH ADHESIVE TAPE OR WITH A SHORT LENGTH OF THE POLYETHYLENE TUBE CUT OPEN, WRAPPED AROUND THE PIPE, AND SECURED IN PLACE. PROCEED WITH INSTALLATION OF THE NEXT SECTION OF PIPE IN THE SAME MANNER.

PIPE-SHAPED APPURTENANCES:
BENDS, REDUCERS, OFFSETS AND OTHER PIPE-SHAPED APPURTENANCES SHALL BE COVERED WITH POLYETHYLENE IN THE SAME MANNER AS THE PIPE.

JUNCTIONS BETWEEN WRAPPED AND UNWRAPPED PIPE:
WHERE POLYETHYLENE WRAPPED PIPE JOINS A PIPE WHICH IS NOT WRAPPED, EXTEND THE POLYETHYLENE TUBE TO COVER THE UNWRAPPED PIPE A DISTANCE OF AT LEAST TWO FEET. SECURE THE END WITH CIRCUMFERENTIAL TURNS OF TAPE.

ODD SHAPED APPURTENANCES:
VALVES, TEES, CROSSES AND OTHER ODD-SHAPED PIECES WHICH CANNOT BE WRAPPED PRACTICALLY IN A TUBE SHALL BE WRAPPED WITH A FLAT SHEET OR SPLIT LENGTH OF POLYETHYLENE TUBE. THE SHEET SHALL BE PASSED UNDER THE APPURTENANCE AND BROUGHT UP AROUND THE BODY. SEAMS SHALL BE MADE BY BRINGING THE EDGES TOGETHER, FOLDING OVER TWICE, AND TAPPING DOWN. SLACK WIDTH AND OVERLAPS AT JOINTS SHALL BE HANDLED AS DESCRIBED ABOVE. TAPE POLYETHYLENE SECURELY IN PLACE AT VALVE STEM AND OTHER PENETRATIONS.

BACKFILL FOR POLYETHYLENE WRAPPED PIPE:
BACKFILL MATERIAL SHALL BE THE SAME AS SPECIFIED FOR PIPE WITHOUT POLYETHYLENE WRAPPING. SPECIAL CARE SHOULD BE TAKEN TO PREVENT DAMAGE TO THE POLYETHYLENE WRAPPING WHEN PLACING BACKFILL, BACKFILL MATERIAL SHOULD BE FREE FROM CINDERS, REFUSE, BOULDERS, ROCKS, STONES OR OTHER MATERIAL THAT COULD DAMAGE POLYETHYLENE.

TUBE SIZE REQUIRED							
PIPE DIAMETER	4"	6"	8"	10"	12"	16"	20"
MIN. FLAT TUBE WIDTH (INCHES)	14	16	20	24	27	34	41

POLYETHYLENE ENCASEMENT FOR DUCTILE IRON PIPE

CINCINNATI WATER WORKS
ENGINEERING DIVISION

DATE 10/19/96

APPROVED Paul E. Tom

STANDARD DRAWING 105-5

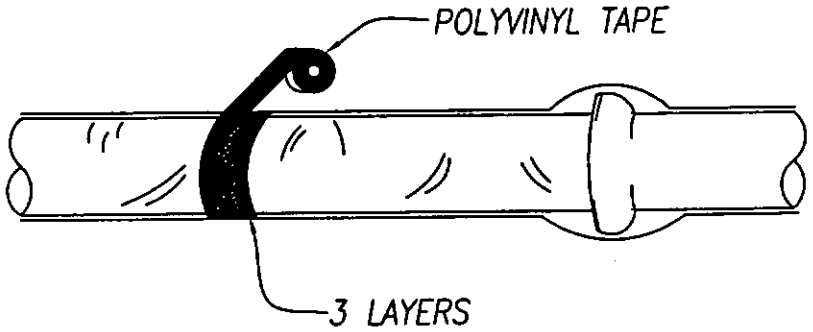

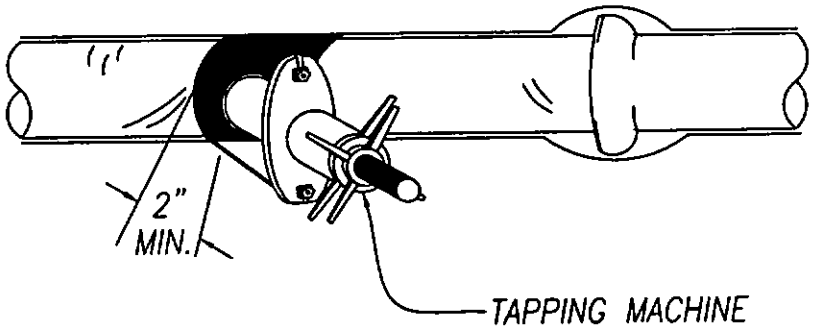

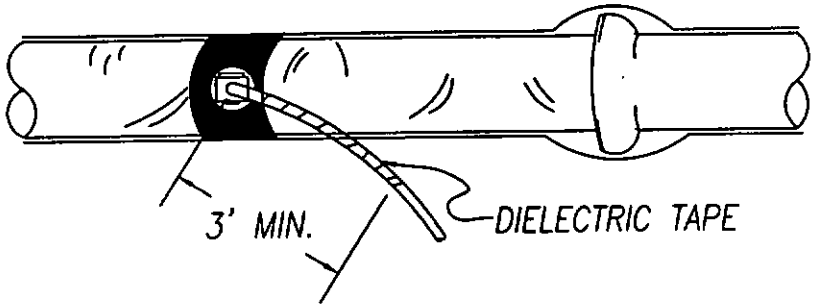

OPENINGS FOR BRANCHES, SERVICE TAPS, BLOW-OFFS, AIR VALVES, AND SIMULAR APPURTENANCES SHALL BE MADE BY:

1.) WRAPPING (3) THREE LAYERS OF POLYVINYL – COMPATIBLE ADHESIVE TAPE COMPLETELY AROUND THE PIPE TO COVER THE AREA WHERE THE TAPPING MACHINE AND CHAIN WILL BE MOUNTED, EXTENDING A MINIMUM OF 2" BEYOND THE MOUNTING SURFACE.

2.) MOUNT THE TAPPING MACHINE ON THE PIPE AREA COVERED BY THE TAPE AND MAKE THE TAP AND INSTALL THE FERRULE DIRECTLY THROUGH THE TAPE AND POLYETHYLENE.

3.) INSPECT THE ENTIRE CIRCUMFERENTIAL AREA FOR DAMAGE AND MAKE ANY NECESSARY REPAIRS WITH TAPE.

4.) ON HOUSE SERVICES, TO MINIMIZE THE POSSIBILITY OF DISSIMILAR METAL CORROSION AT SERVICE CONNECTIONS, WRAP THE FERRULE AND A MINIMUM CLEAR DISTANCE OF THREE FEET OF THE COPPER SERVICE WITH POLYETHYLENE OR A SUITABLE DIELECTRIC TAPE.

TAPPING POLYETHYLENE ENCASED PIPE		
CINCINNATI WATER WORKS ENGINEERING DIVISION		DATE 11/9/98
APPROVED Paul E. Toma	STANDARD DRAWING 105-5A	

1 - 6" x 2" SERVICE SADDLE
1 - 2" LOW LEAD FERRULE
1 - 2" 90 DEGREE BEND - SWEAT FITTING
1 - 2" LOW LEAD STOP COCK
1 - ROADWAY BOX
- 2" x 3/4" TEES- SWEAT FITTING

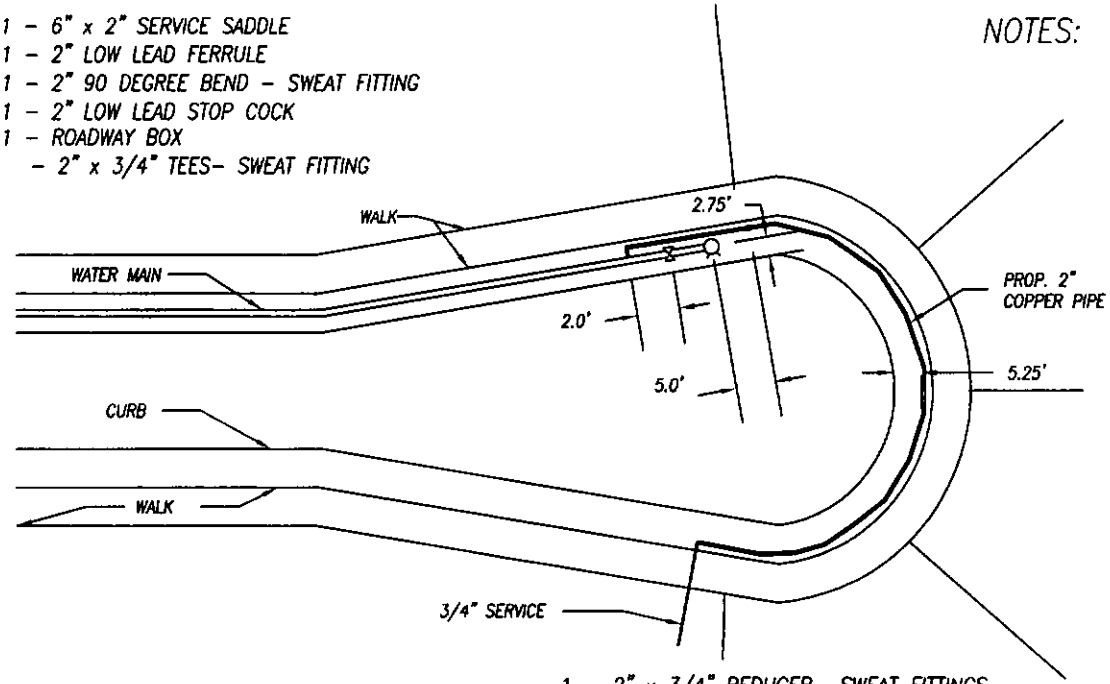

1 - 2" x 3/4" REDUCER- SWEAT FITTINGS
1 - 3/4" 90 DEGREE BEND - SWEAT FITTING

SPECIAL NOTE

THIS 2 INCH COPPER PIPE INSTALLATION WILL ONLY BE PERMITTED UNDER THE FOLLOWING CONDITIONS:

1. MAXIMUM OF FIVE(5) SINGLE FAMILY 3/4" DOMESTIC WATER SERVICES.

2. LENGTH OF 2 INCH COPPER PIPE NOT TO EXCEED 200 FEET.

3. MINIMUM STATIC PRESSURE OF 55 P.S.I. AS DETERMINED BY THE CINCINNATI WATER WORKS.

NOTES:

1. THE 2 INCH COPPER PIPE MUST BE INSTALLED BY A CERTIFIED TAPPER INSTALLING THE SERVICE BRANCHES WITHIN THE SUBDIVISION. THE GUARANTEE PERIOD FOR THE 2 INCH COPPER PIPE WILL BE INCLUDED IN THE DEVELOPER'S BOND FOR THE SERVICE BRANCH INSTALLATIONS.

2. APPLICATION FOR EACH SUBDIVISION SERVICE BRANCHES MUST BE MADE PRIOR TO THE INSTALLATION OF THE 2 INCH COPPER PIPE AND FITTINGS.

3. ROADWAY BOXES MUST BE PURCHASED FROM THE CINCINNATI WATER WORKS.

4. THE CONTRACTOR WILL FURNISH THE 2 INCH FERRULE, 2 INCH STOP COCK, AND SERVICE SADDLES, AND PROVIDE MANUFACTURER'S CERTIFICATION.

5. NO ADDITIONAL JOINTS WILL BE PERMITTED IN THE 2 INCH COPPER PIPE BETWEEN THE BRANCH AND THE TEE.

6. ALL FITTINGS AND JOINTS SHALL REMAIN EXPOSED FOR VISUAL INSPECTION UNTIL AFTER THE 2 INCH COPPER LINE HAS BEEN PLACED IN SERVICE.

7. THE CONTRACTOR WILL BE REQUIRED TO PROVIDED MANUFACTURER'S CERTIFICATION FOR COPPER TUBING IN ACCORDANCE WITH A.S.T.M. B-88, TYPE K, AND BRONZE FITTINGS IN ACCORDANCE WITH A.N.S.I. (A.S.A.) B-16.22.

8. THE 2 INCH COPPER PIPE SHALL BE PROPERLY DISINFECTED PRIOR TO BEING PLACED IN SERVICE.

9. ALL SWEAT JOINTS MUST BE MADE WITH SOLDER THAT MEETS THE COMPOSITION REFERRED TO AS ALLOY GRADE Sb5 OR Sn96 AS PRESCRIBED IN TABLE 5 OF ASTM B 32-83.

2" COPPER PIPE INSTALLATION FOR CUL-DE-SAC	
CINCINNATI WATER WORKS ENGINEERING DIVISION	DATE 5-12-06
APPROVED	STANDARD DRAWING 105-6

REQUIREMENTS OF THE DIRECTOR

THE CINCINNATI WATER WORKS WILL DETERMINE THE LENGTH OF ALL WATER MAINS AND THE MINIMUM NUMBER OF PANHANDLE LOTS TO BE SERVED ALONG PRIVATE DRIVE EASEMENTS ON AN INDIVIDUAL BASIS.

A FULL TIME SOIL TECHNICIAN WILL BE REQUIRED THROUGHOUT ALL PHASES OF THE EARTHWORK CONSTRUCTION FOR THE PRIVATE DRIVE IN ORDER TO PERFORM ALL THE NECESSARY SOIL TESTING AND INSPECTION. THE ENGINEER WILL BE RESPONSIBLE FOR FURNISHING THE CINCINNATI WATER WORKS A COMPLETE SET OF INSPECTION AND TESTING LOG NOTES AND/OR CERTIFICATIONS PRIOR TO INSTALLING ANY WATER MAIN IN THE PUBLIC DRIVE.

ALL PUBLIC WATER MAINS TO SERVE PANHANDLE LOTS MUST BE INSTALLED WITHIN A 30' MINIMUM WIDTH WATER MAIN EASEMENT. THE WATER WORKS STANDARD EASEMENT RESTRICTIONS WILL APPLY. THE WIDTH OF THE EASEMENT MUST COINCIDE WITH THE WIDTH OF THE PRIVATE DRIVEWAY EASEMENT AND BE SUBJECT TO THE APPROVAL OF THE CINCINNATI WATER WORKS. ALL EASEMENT LINES WILL BE CONSIDERED THE SAME AS A RIGHT-OF-WAY LINE WITH REGARDS TO THE INSTALLATION OF THE WATER MAINS AND APPURTENANCES. THE ENGINEER WILL BE RESPONSIBLE FOR PREPARING AND RECORDING THE NECESSARY EASEMENT PLAT. THE CITY OF CINCINNATI WILL PASS LEGISLATION FOR ACCEPTANCE OF ALL EASEMENTS FOR THE CINCINNATI WATER WORKS.

THE LOCATION OF ALL STOPS, METER SETTINGS, WATER MAIN VALVES AND FIRE HYDRANTS MUST BE IN CONFORMANCE WITH THE APPROPRIATE CINCINNATI WATER WORKS STANDARD DRAWINGS OR AS NOTED ON THE PLANS. ALL STANDARD WATER WORKS NOTES MUST APPEAR ON THE APPROVED CITY OR COUNTY WATER SUPPLY LINE PLANS.

OWNERS OF PROPERTY SERVED FROM A PUBLIC WATER MAIN IN A PRIVATE DRIVE EASEMENT FOR PANHANDLE LOTS WILL BE REQUIRED TO ENTER INTO A DRIVEWAY MAINTENANCE AGREEMENT AS REQUIRED BY THE APPROPRIATE PLANNING COMMISSION AUTHORITY OR SUCH OTHER PUBLIC AUTHORITY HAVING JURISDICTION.

ACCESS DRIVE PAVEMENT TO BE BUILT IN ACCORDANCE WITH THE STANDARD SPECIFICATIONS OF THE STATE OF OHIO, DEPARTMENT OF TRANSPORTATION, LATEST REVISION.

THE DEVELOPER WILL BE REQUIRED TO INSTALL ALL WATER MAINS AND APPURTENANCES, INCLUDING TAPS, PRIOR TO RECORDING ON THE APPROPRIATE RECORD PLATS.

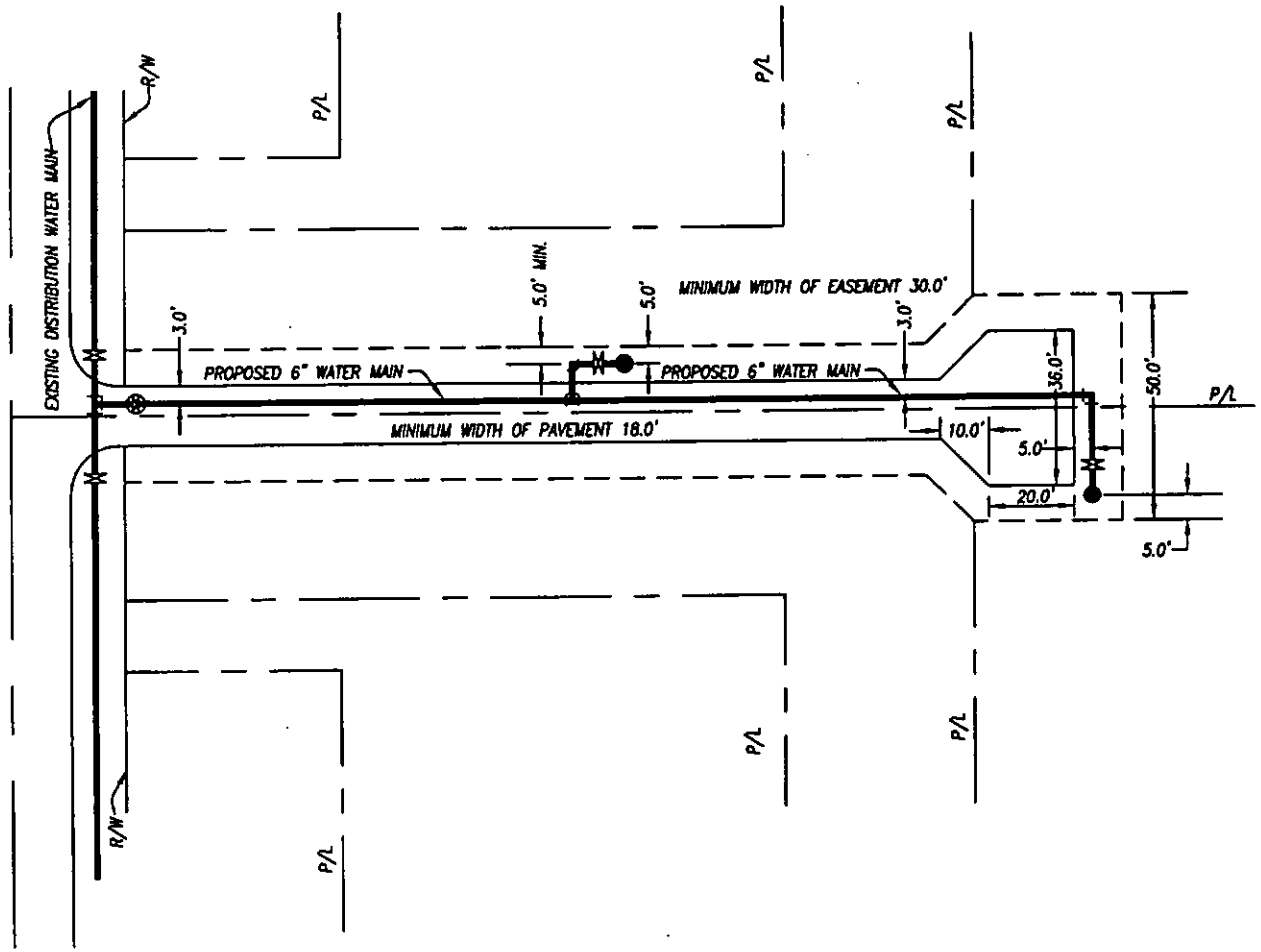

TYPICAL ACCESS DRIVE SECTION

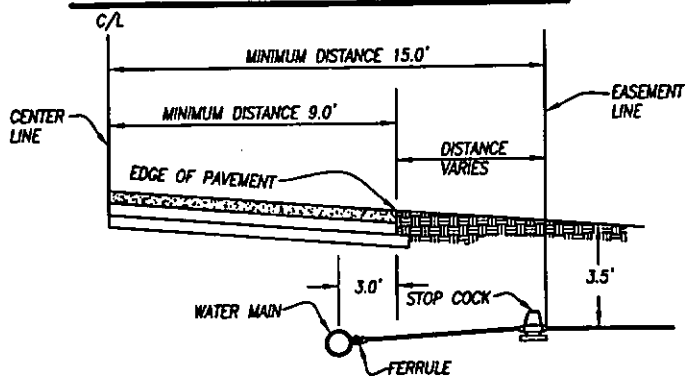

REQUIREMENTS FOR PRIVATE DEVELOPMENTS ON PANHANDLE LOTS		DATE 10/26/96
CINCINNATI WATER WORKS ENGINEERING DIVISION		
APPROVED Paul E. Torres	STANDARD DRAWING 105-7	

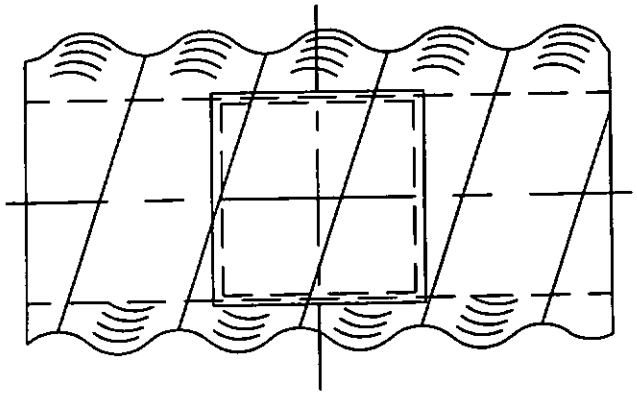

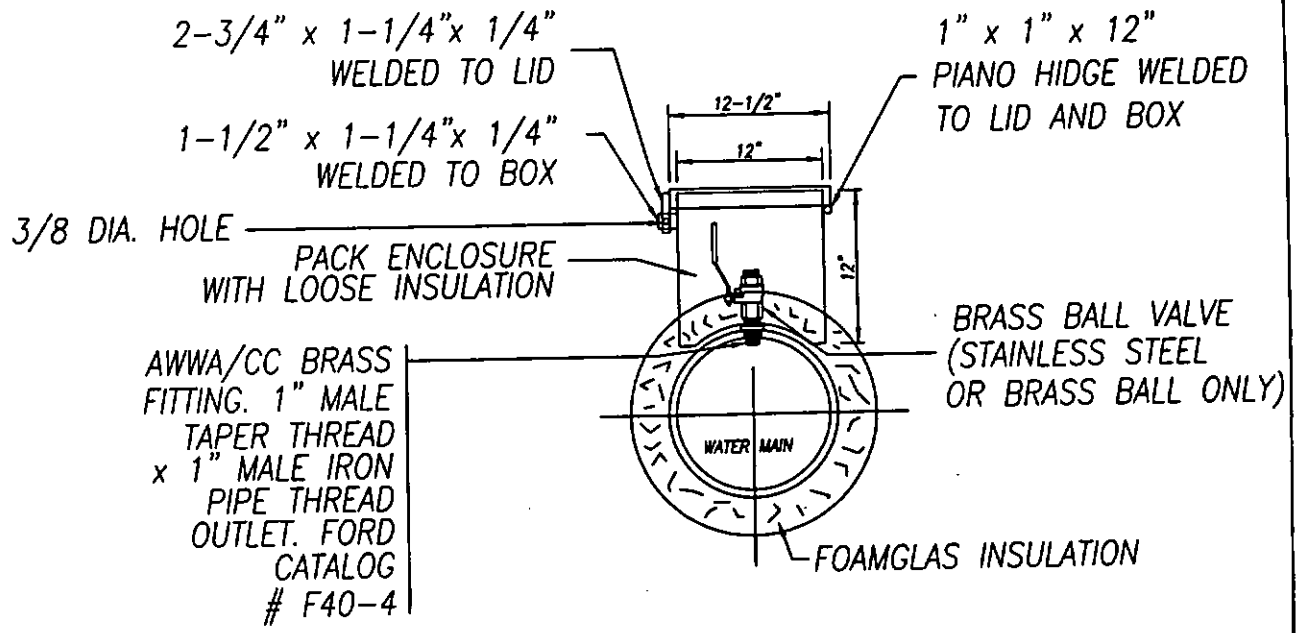

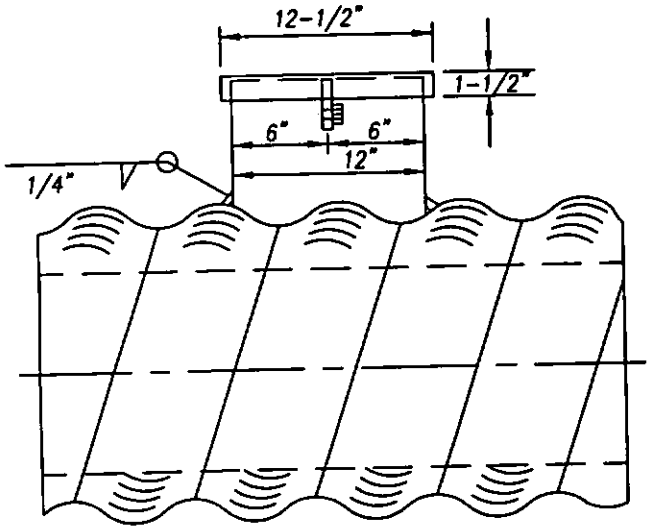

ALL MATERIAL FOR
BOX - 12 GA. MILD STEEL
A-36 HOT ROLLED.
ALL MATERIALS TO BE
HOT DIPPED GALVANIZED.

NOTE:

1. BOX TO BE WELDED TO NESTABLE CORRUGATED METAL PIPE PRIOR TO HOT DIP GALVANIZING.
2. BRASS BALL VALVES TO BE 150 lbs. S.W.P. WITH 3" HANDLES, STAINLESS STEEL OR BRASS BALL, BUNA-N-SEATS, CONFORMING TO ASTM 62.

AIR RELEASE ASSEMBLY STANDARD FOR WATER MAINS ON BRIDGES		
CINCINNATI WATER WORKS ENGINEERING DIVISION		DATE 11/23/06
APPROVED Paul E. Torman	STANDARD DRAWING 105-8	

BACKFILL CROSS SECTION	METHOD DESIGNATION	FOR NOMINAL PIPE SIZES	PIPE AREA	BALANCE OF BACKFILL
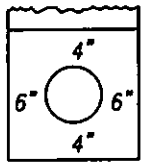	A	UNDER 12"	EMBEDMENT MATERIAL	GRANULAR MATERIAL
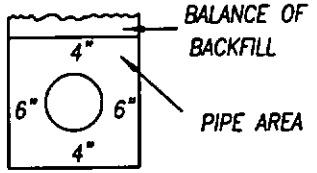	B	UNDER 12"	EMBEDMENT MATERIAL	COARSE FILL
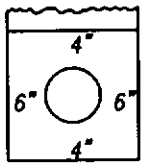	A	12" & 16"	EMBEDMENT MATERIAL	GRANULAR MATERIAL
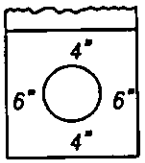	B	12" & 16"	EMBEDMENT MATERIAL	COARSE FILL
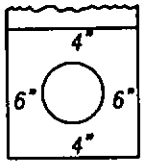	A	20" & OVER	EMBEDMENT MATERIAL	GRANULAR MATERIAL

TYPICAL BACKFILL REQUIREMENT

CINCINNATI WATER WORKS
ENGINEERING DIVISION

DATE 11/23/96

APPROVED Paul E. Torres

STANDARD DRAWING 106-1

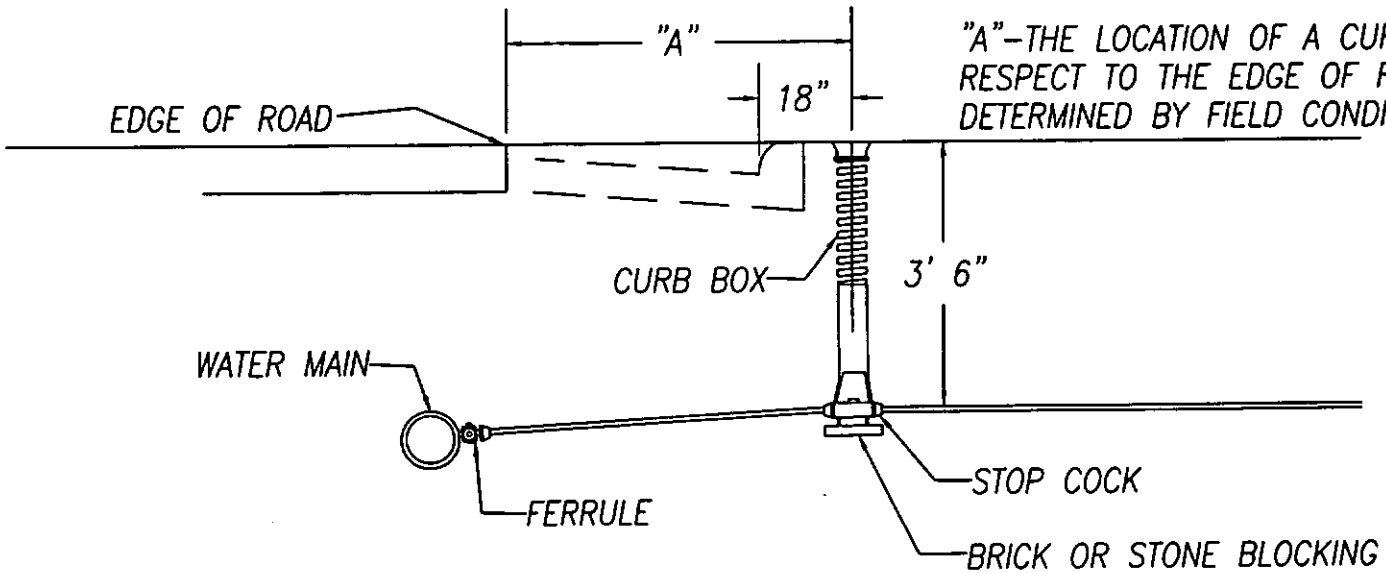

"A"–THE LOCATION OF A CURB BOX WITH RESPECT TO THE EDGE OF ROAD IS DETERMINED BY FIELD CONDITIONS.

STANDARD SERVICE BRANCH INSTALLATION WITH CURB BOX		
CINCINNATI WATER WORKS ENGINEERING DIVISION		DATE 10/19/96
APPROVED Paul E. Tomes	STANDARD DRAWING 107–1	

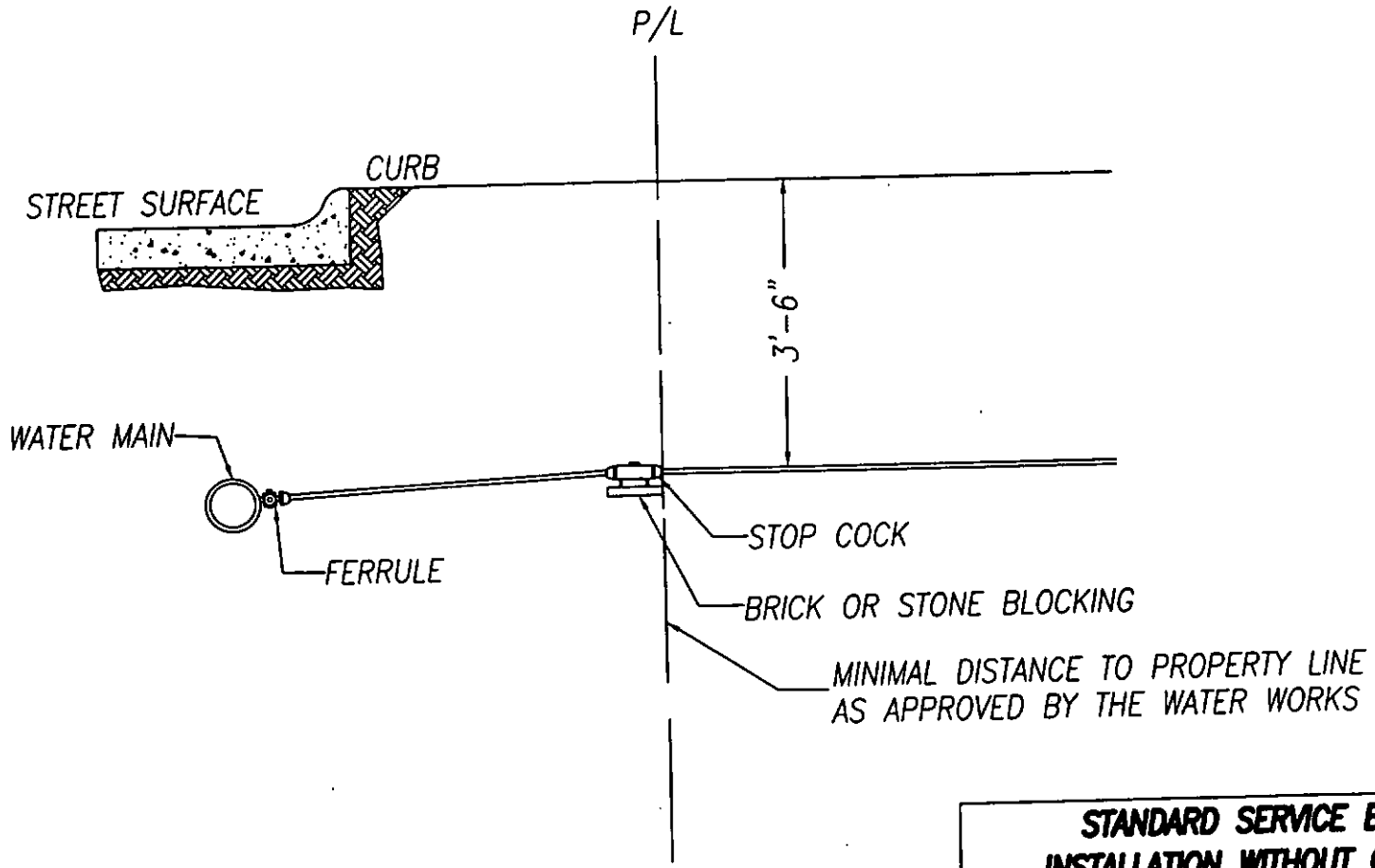

STANDARD SERVICE BRANCH INSTALLATION WITHOUT CURB BOX

CINCINNATI WATER WORKS
ENGINEERING DIVISION

DATE 10/19/96

APPROVED Paul E. Tomes

STANDARD DRAWING 107-2

CONSTRUCTION SPECIFICATIONS:

PIT CONSTRUCTION DETAILS:

1) METER PIT FLOOR SHALL BE 6" CONCRETE WITH 42 LB. ROAD MESH INSTALLED. THE FLOOR, AT ITS SHALLOWEST POINT MUST BE A MINIMUM OF 6", SLOPED TOWARD THE DRAIN OR SUMP PUMP LOCATION. FLOOR SLAB MUST ALSO HAVE WATER STOP INSTALLED.

B) METER PIT WALLS SHALL BE 8" CONCRETE WITH 5/8" DIAMETER STEEL REINFORCING RODS 18" CENTERED HORIZONTALLY AND VERTICALLY. REINFORCING STEEL TO BE ANGLED AND EXTEND 18" CENTERED INTO TOP SLAB.

C) METER PIT TOP SLAB SHALL BE 8" CONCRETE WITH 5/8" DIAMETER REINFORCING RODS, 6" ON CENTER-SHORT SPAN AND 18" ON CENTER-LONG SPAN. REINFORCING STEEL IN TOP SLAB SHALL BE LOCATED IN THE BOTTOM PORTION OF THE SLAB, 2" FROM THE SURFACE. 5/8" REINFORCING STEEL TO BE 2' LONG IN TOP OF SLAB DIAGONALLY AT CORNER OF OPENINGS. TOP SLAB SHALL BE SET TO FINISHED GRADE.

CONCRETE CONSTRUCTION

ALL CONCRETE USED IN CONSTRUCTION OF METER PIT WALLS, FLOORS, AND REINFORCED SLABS SHALL BE COMPOSED OF ONE PART CEMENT, TWO PARTS SAND, AND THREE PARTS AGGREGATE BY WEIGHT AND A MAXIMUM WATER CEMENT RATIO OF 0.50. BEFORE CONCRETE IS PLACED, THE FORMS , REINFORCEMENT STEEL, WATER STOPS, AND ANCHOR BOLTS SHALL BE RIGIDLY SECURED IN PROPER POSITION. ALL DIRT, MUD, WATER, DEBRIS AND OTHER FOREIGN MATERIAL SHALL BE REMOVED FROM THE SPACE TO BE OCCUPIED BY THE CONCRETE. CONCRETE SHALL BE DEPOSITED AND COMPACTED IN THE WALL SLABS BEFORE ANY REINFORCING STEEL IS PLACED IN THE SLAB AREA AND SHALL SETTLE AT LEAST 2 HOURS BEFORE THE SLAB CONCRETE IS POURED. CONCRETE SHALL BE PROTECTED FROM LOSS OF MOISTURE FOR A CURING PERIOD OF AT LEAST 7 DAYS.

GREATER CINCINNATI WATER WORKS 12/23/03	MATERIAL AND CONSTRUCTION SPECIFICATIONS		
	GREATER CINCINNATI WATER WORKS COMMERCIAL SERVICES DIVISION		
	APPROVED Paul Tomm	DATE 1/1/04	STANDARD DRAWING 108-1

REINFORCING STEEL

ALL REINFORCING STEEL SHALL BE FREE FROM DIRT, OIL, GREASE, OR AVOIDABLE, LOOSE RUST WHEN PLACED IN CONCRETE. REINFORCING STEEL SHALL BE SECURELY HELD IN PLACE DURING THE CONCRETE POURING OPERATION. IN NO CASE SHALL REINFORCING STEEL BE DRIVEN OR FORCED INTO CONCRETE AFTER IT HAS TAKEN ITS INITIAL SET.

WATERPROOFING

THE EXTERIOR SIDE OF PIT WALLS SHALL BE WATERPROOFED WITH TWO COATS OF ONE OF THE FOLLOWING MATERIALS APPLIED IN ACCORDANCE WITH THE MANUFACTURERS RECOMMENDATIONS. THOROSEAL; U.S.S. CHEMICAL TARMASTIC #102; KOPPERS BITUMASTIC SUPER SERVICE BLACK; DAMCHEX; AMERCOAT #78; SEALTIGHT MEL-ROL AND MEL-PRIME PRIMER OR APPROVED EQUAL. VOIDS BETWEEN PIPE AND WALL SHALL BE GROUTED WITH A HYDRAULIC CEMENT SUCH AS WATERPLUG OR APPROVED EQUAL.

DRAIN

EACH PIT SHALL BE DRAINED BY MEANS OF A 4" DRAIN LEADING TO A GRAVEL FILLED SUMP 3'X3'X3'. THE PIT SHALL BE SLOPED TO A FLOOR DRAIN PLACED IN A CORNER OPPOSITE THE LID. THE FLOOR DRAIN CASTING SHALL HAVE A 4" OUTLET AND A RAISED OR BEEHIVE DOME GRATE SIMILAR TO WADE #1634; JOSAM #7324; OR AN APPROVED EQUAL.

PIT LIDS

PITS NOT SUBJECT TO PARKING OR TRAFFIC SHALL BE CONSTRUCTED USING BILCO J-1AL (24"X24"), JD-2AL (48"X48") AND HAVE A FACTORY DRILLED 1-3/4" HOLE IN THE TOP.

PITS CONSTRUCTED IN PARKING AREAS SHALL HAVE A GUARD POST SET IN THE GROUND AT EACH CORNER OF THE ROOF SLAB, OR HAVE THE ROOF SLAB RAISED AT LEAST 6" ABOVE GROUND LEVEL TO PREVENT PARKING ON THE PIT.

PITS SUBJECT TO HEAVY TRAFFIC LOADS SHALL BE EQUIPPED WITH LIDS AS FOLLOWS: BILCO -1AL-H-20(24"X24"), J-D-2AL-H-20 (48"X48"),JD-3AL-H-20 (48"X72").

(CONTINUED ON NEXT PAGE)

GREATER CINCINNATI WATER WORKS 12/23/03	MATERIAL AND CONSTRUCTION SPECIFICATIONS		
	GREATER CINCINNATI WATER WORKS COMMERCIAL SERVICES DIVISION		
	APPROVED Paul Tomes	DATE 1/1/04	STANDARD DRAWING 108-1A

PIT LIDS (CONTINUED)

ALL BILCO LIDS SHALL BE EQUIPPED WITH STAINLESS STEEL HARDWARE AND MUST HAVE A 25 YEAR WARRANTY. LIDS SHALL BE CENTERED LENGTHWISE OVER THE DOMESTIC METER.

PIPES, METERS AND FITTINGS

ALL METERS SHALL BE PURCHASED FROM THE GCWW. SERVICE BRANCHES 3/4" THROUGH 2" SHALL BE SOFT ANNEALED TYPE "K" COPPER CONFORMING TO ASTM-B88, FROM THE MAIN TO THE WATER METER. ONLY COMPLETE ROLLS OF 60' OR 100' TYPE "K" COPPER MAY BE USED ON 3/4" AND 1" BRANCHES. AT NO TIME SHALL COPPER BE RUN THROUGH ANY CONDUIT. CONNECTIONS BETWEEN PIPE 3/4" OR 1" SHALL BE BY FLARED FITTING. CONNECTIONS BETWEEN PIPE 1 1/2" AND 2" SHALL BE WITH SILVER SOLDER OR FLARED FITTING. VALVES, FITTINGS, TEST TEES AND DETECTOR CHECK TRIM SHALL BE **"LOW LEAD" GCWW APPROVED BRASS.** SERVICE BRANCHES LARGER THAN 2" SHALL BE EITHER TYPE "K" COPPER OR DUCTILE IRON FROM THE MAIN TO THE METER SETTING OUTLET VALVE. DUCTILE IRON PIPE SHALL CONFORM TO CINCINNATI SPECIFICATION #40-110-91(CLASS 55) OR THE LATEST REVISION THEREOF AND SHALL BE INSPECTED BY THE CINCINNATI WATER WORKS ENGINEERING DIVISION.

INSULATION COUPLINGS

AN INSULATING COUPLING MUST BE INSTALLED ON THE HOUSE SIDE OF THE CORPORATION STOP ON ALL WATER SERVICE BRANCHES 3/4" THROUGH AND INCLUDING 2".

CURB BOXES/ROADWAY BOXES AND TELESCOPES

A GCWW APPROVED CURB BOX MUST BE INSTALLED OVER THE CORPORATION STOP ON ALL 3/4" AND 1" SERVICE LINE INSTALLATIONS AND SET TO ROUGH GRADE. IN THE INSTANCE WHERE A CORPORATION STOP WILL BE UNDER A PAVED AREA, A ROADWAY BOX MUST BE INSTALLED ON A 3/4" AND 1" SERVICE LINE INSTALLATION. ROADWAY BOXES MUST BE INSTALLED OVER THE CORPORATION STOP ON 1 1/2" AND 2" SERVICE LINE INSTALLATIONS AND SET TO ROUGH GRADE. (SEE E-476-M OR W-477-M FOR CURB BOX/ROADWAY BOX SPECIFICATIONS.)

(CONTINUED ON NEXT PAGE)

GREATER CINCINNATI WATER WORKS 12/23/03	**MATERIAL AND CONSTRUCTION SPECIFICATIONS**		
	GREATER CINCINNATI WATER WORKS COMMERCIAL SERVICES DIVISION		
	APPROVED	DATE 5/12/06	STANDARD DRAWING 108-1B

CURB BOXES/ROADWAY BOXES AND TELESCOPES: (CONTINUED)

A VALVE BOX MUST BE INSTALLED OVER THE CORPORATION STOP ON ALL 4" AND LARGER SERVICE LINE INSTALLATIONS. (SEE E-125-M OR E-125-MX FOR VALVE BOX SPECIFICATIONS) IRON TELESCOPES MUST BE USED IN TRAFFIC AREAS. PLASTIC TELESCOPES MAY BE INSTALLED IN GRASS AREAS. CONCRETE BRICKS MUST BE USED UNDER THE IRON TELESCOPE AND IRON VALVE BOX. OAK BLOCKS MAY BE USED UNDER THE PLASTIC TELESCOPE AND PLASTIC VALVE BOX.

REMOVABLE METAL LADDER

THE REMOVABLE METAL LADDER SHALL BE AN APPROVED OSHA TYPE 1 INDUSTRIAL-HEAVY 250 POUND RATED LADDER THAT MEETS THE AMERICAN NATIONAL STANDARD SAFETY CODE FOR PORTABLE METAL LADDERS. ANSI A 14.2 - (LATEST REVISION). THE LADDER MUST REACH FROM THE PIT FLOOR AND EXTEND INTO THE PIT OPENING.

METER BOX ENCLOSURE/OUTSIDE SETTING

ALL WATER METER SETTINGS (5/8" - 2") IN AN OUTSIDE METER BOX MUST BE INSTALLED WITH A SONOCO POLYMER METER BOX ENCLOSURE OR AN APPROVED EQUAL. FORD METER BOX METAL ENCLOSURES (CASTING) AND ARMORCAST LIDS OR AN APPROVED EQUAL ARE INDICATED ON SPECIFIC STANDARD DRAWINGS. SETTING MUST BE CENTERED IN BOX, 15" TO 19" BELOW GRADE.

HYDROSTATIC TESTING OF SERVICE BRANCHES

BRANCHES MORE THAN 300 FEET IN LENGTH BETWEEN CURB STOP AND METER SETTING MUST BE HYDROSTATICALLY TESTED. BRANCHES LESS THAN 300 FEET WILL BE INSPECTED IN ACCORDANCE WITH STANDARD INSPECTION PROCEDURES. THE HYDROSTATIC TEST, AS WELL AS THE STANDARD BRANCH INSPECTION, MUST BE WITNESSED BY A GCWW REPRESENTATIVE. THE HYDROSTATIC TESTING SHALL BE AT A PRESSURE 50 PSI GREATER THAN THE EXISTING STATIC PRESSURE IN THE WATER MAIN, MAINTAINED FOR 5 MINUTES, WITH NO PRESSURE LOSS.

NO BACKFILL OF ANY PORTION OF THE LINE MAY OCCUR UNTIL THE INSPECTION AND HYDROSTATIC TESTING IS COMPLETE. IT MAY BE NECESSARY, AT TIMES, TO BACKFILL A PORTION OF THE TRENCH BEFORE THE ENTIRE BRANCH IS INSTALLED.

(CONTINUED ON NEXT PAGE)

GREATER CINCINNATI WATER WORKS 12/23/03	MATERIAL AND CONSTRUCTION SPECIFICATIONS		
	GREATER CINCINNATI WATER WORKS COMMERCIAL SERVICES DIVISION		
	APPROVED Paul Tomas	DATE 1/1/04	STANDARD DRAWING 108-1C

HYDROSTATIC TESTING OF SERVICE BRANCHES (CONTINUED)

THE GCWW INSPECTOR ON SITE MAY AUTHORIZE THE BACKFILL AFTER INSPECTING THE PORTION OF THE BRANCH TO BE COVERED. IN SUCH CASES, THE HYDROSTATIC TEST SHALL BE COMPLETED ON EACH SECTION BEFORE BACKFILLING.

THE FOLLOWING PROCEDURE WILL BE USED FOR THE TEST:

A) THE SERVICE SHALL BE INSTALLED IN ACCORDANCE WITH GCWW REGULATIONS. IT SHALL BE THE CERTIFIED PERSON'S RESPONSIBILITY TO CALL THE GCWW TO ARRANGE FOR AN INSPECTION OF THE BRANCH. AN INSPECTION WILL BE MADE BY THE GCWW INSPECTOR AT THE TIME OF THE HYDROSTATIC TEST.

B) AFTER COMPLETING INSTALLATION, THE BRANCH SHALL BE FILLED WITH WATER AT WATER MAIN PRESSURE. THE CERTIFIED PERSON WILL CONNECT THE HYDROSTATIC TEST EQUIPMENT TO THE LINE. A PRESSURE GAUGE APPROPRIATE FOR THE PRESSURE BEING MEASURED, AND A BALL VALVE, MUST BE INSTALLED AT THE OUTLET END OF THE LINE. AFTER THE EQUIPMENT IS CONNECTED, THE CURB STOP WILL BE SHUT OFF, ISOLATING THE PRESSURE IN THE LINE. THE CERTIFIED PERSON WILL THEN INCREASE THE LINE PRESSURE 50 PSI GREATER THAN THE NORMAL STATIC PRESSURE AT THE WATER MAIN. THE BALL VALVE WILL THEN BE CLOSED SO AS TO ISOLATE THE LINE FROM THE HYDROSTATIC TEST EQUIPMENT. THE GCWW INSPECTOR WILL MONITOR THE PRESSURE GAUGE FOR A PERIOD OF 5 MINUTES. THERE SHALL BE NO ALLOWABLE PRESSURE LOSS DURING THIS PERIOD.

GREATER CINCINNATI WATER WORKS 12/23/03	MATERIAL AND CONSTRUCTION SPECIFICATIONS		
	GREATER CINCINNATI WATER WORKS COMMERCIAL SERVICES DIVISION		
	APPROVED Paul Tomes	DATE 1/1/04	STANDARD DRAWING 108-1D

AMR SYSTEM INSTALLATIONS ON ***NEW*** SERVICES:

METER PITS OR FROST PROOF BOXES SHALL BE SET AS CLOSE AS PRACTICAL TO THE PROPERTY LINE. IN THE INSTANCE WHERE A METER IS TO BE INSTALLED IN A FROST PROOF BOX, THE APPROPRIATE FORD METER BOX ENCLOSURE AND COVER MUST BE INSTALLED. SEE SPECIFIC DRAWING PERTAINING TO METER SIZE. OUTER LIDS MUST BE ARMORCAST A6-449 OR 459 DEPENDING ON METER SIZE.

GCWW PERSONNEL OR AUTHORIZED AGENT WILL INSTALL 5/8" THROUGH 1" METERS, WIRE AND METER INTERFACE UNIT IN FORD METER BOX SETTINGS. GCWW PERSONNEL OR AUTHORIZED AGENT WILL INSTALL ALL MIU'S.

IN THE UNUSUAL EVENT THAT A METER IS INSTALLED INSIDE A BUILDING, A HOLE MUST BE DRILLED THROUGH THE FOUNDATION OR WALL 36" TO 60" ABOVE THE FINISHED GRADE. MIU WILL BE INSTALLED AT THIS LOCATION. 3/4" CONDUIT MUST BE RUN FROM THE METER SETTING TO THE HOLE. 5/8" - 2" METERS REQUIRE A 1/4" HOLE WHILE 3" OR LARGER METERS REQUIRE A 3/4" HOLE. WIRE MUST BE RUN THROUGH THE CONDUIT WITH A MINIMUM OF 1 FOOT OF EXCESS WIRE SECURED ON THE INLET VALVE AND A MINIMUM OF 1 FOOT OF EXCESS WIRE OUTSIDE OF THE FOUNDATION OR WALL. AFTER RUNNING THE WIRE, THE HOLE MUST BE SEALED WITH FLEXIBLE SEALANT.

GCWW PERSONNEL OR AUTHORIZED AGENT WILL CONNECT ALL CABLE.

GREATER CINCINNATI WATER WORKS 12/23/03	AUTOMATIC METER READING SYSTEM (AMR) STANDARDS		
	GREATER CINCINNATI WATER WORKS COMMERCIAL SERVICES DIVISION		
	APPROVED Paul Tomes	DATE 1/1/04	STANDARD DRAWING 108-1E

BACKFLOW

ALL BACKFLOW DEVICES MUST BE NO SMALLER THAN THE SIZE OF THE METER. ALL BACKFLOW DEVICES MUST BE TESTED AT THE TIME OF INSTALLATION AND ONCE A YEAR THEREAFTER.

ABOVE GROUND BACKFLOW DEVICE ENCLOSURE

WHEN FROST PROOF PROTECTION IS NECESSARY, A HOTBOX OR APPROVED EQUAL MUST BE USED. THE DEPTH OF WATER INSIDE THE ENCLOSURE SHALL NOT EXCEED 6" DURING FULL FLOW OF THE BACKFLOW RELIEF VALVE DISCHARGE, NOR SHALL WATER STAND TO ANY DEPTH GREATER THAN 1/4" AFTER COMPLETION OF FULL FLOW.

ALL TEST COCKS, VALVE HANDLES OR HAND WHEELS SHALL BE WITHIN A MAXIMUM OF 24" OF ACCESS OPENING.

HINGED ACCESS PANELS SHALL BE SECURELY RESTRAINED IN THE OPEN AND CLOSED POSITIONS SO AS TO AVOID INJURY. HINGED ACCESS TO THE BACKFLOW PREVENTER SHALL BE LOCKABLE.

GREATER CINCINNATI WATER WORKS 12/23/03	BACKFLOW DEVICE SPECIFICATIONS		
	GREATER CINCINNATI WATER WORKS COMMERCIAL SERVICES DIVISION		
	APPROVED Paul Tomes	DATE 1/1/04	STANDARD DRAWING 108-1F

METER SIZE (IN INCHES)	METER TYPE	LAYING LENGTH (IN INCHES)
5/8	POSITIVE DISPLACEMENT	7 1/2
3/4	POSITIVE DISPLACEMENT	9
1	POSITIVE DISPLACEMENT	10 3/4
1 1/2	POSITIVE DISPLACEMENT	13
2	POSITIVE DISPLACEMENT	17
2	TURBINE	17
3	COMPOUND	24
3	TURBINE	24
4	COMPOUND	29
4	TURBINE	29
4	FIRE PROTECTION ASSEMBLY	33
6	COMPOUND	36
6	TURBINE	36
6	FIRE PROTECTION ASSEMBLY	45
8	TURBINE	42
8	FIRE PROTECTION ASSEMBLY	53
10	TURBINE	48
10	FIRE PROTECTION ASSEMBLY	68
12	TURBINE	68
16	TURBINE	68
20	TURBINE	68

LAYING LENGTH INCLUDES STRAINER AND SPACER

GREATER CINCINNATI WATER WORKS 12/23/03

WATER METER LAYING LENGTHS

GREATER CINCINNATI WATER WORKS
COMMERCIAL SERVICES DIVISION

APPROVED	DATE	STANDARD DRAWING
Paul Toma	1/1/04	108-1G

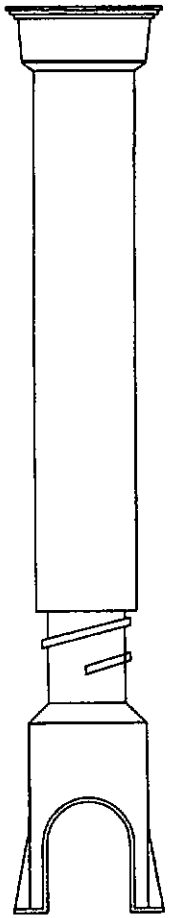

COMPLETE ASSEMBLY

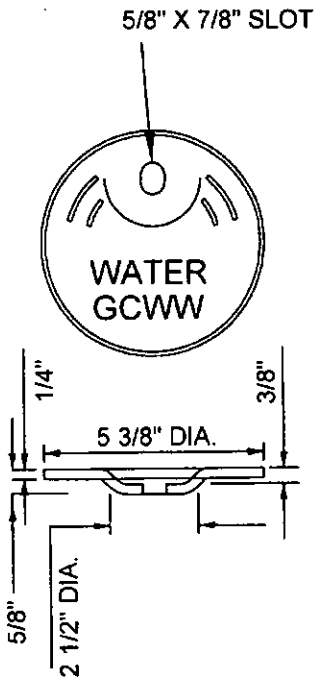

CAST IRON LID

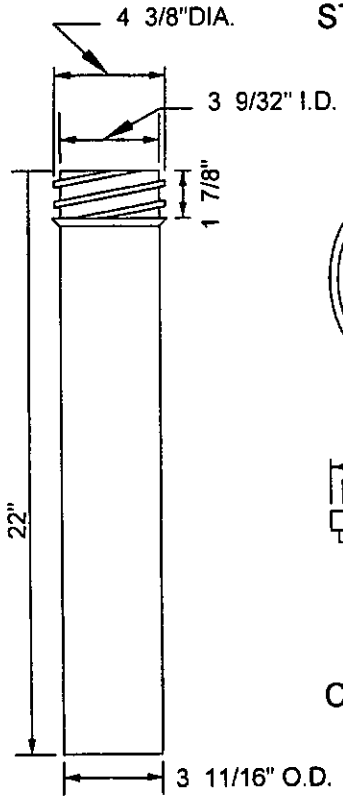

TOP

(THREAD ELIMINATED ON SLIP STYLE) (PLASTIC)

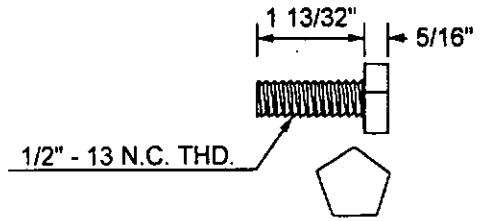

STANDARD PENTAGON HEAD BRASS BOLT

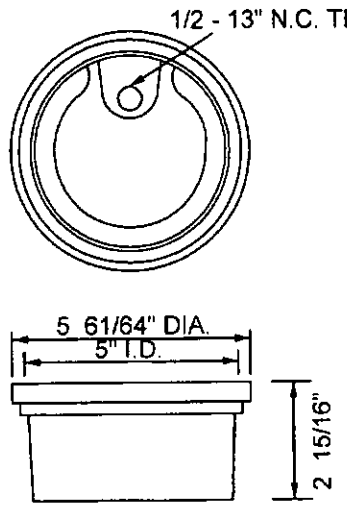

CAST IRON RING

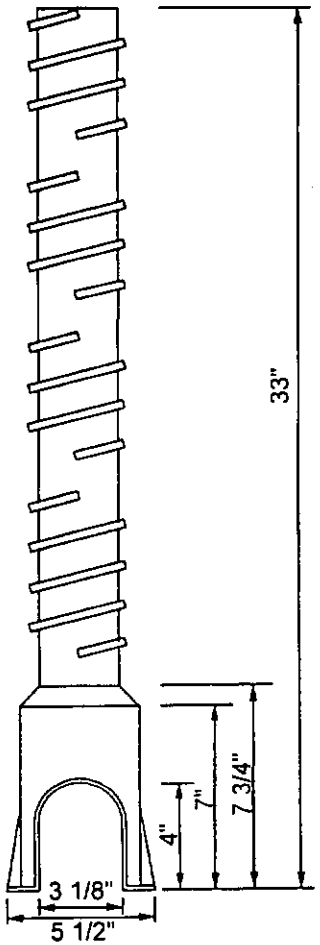

BOTTOM (PLASTIC)

GREATER CINCINNATI WATER WORKS 12/23/03	**CURB BOX** CAST IRON LID & RING AND PLASTIC TOP & BOTTOM		
	GREATER CINCINNATI WATER WORKS COMMERCIAL SERVICES DIVISION		
	APPROVED Paul Turner	DATE 1/1/04	STANDARD DRAWING 108-2

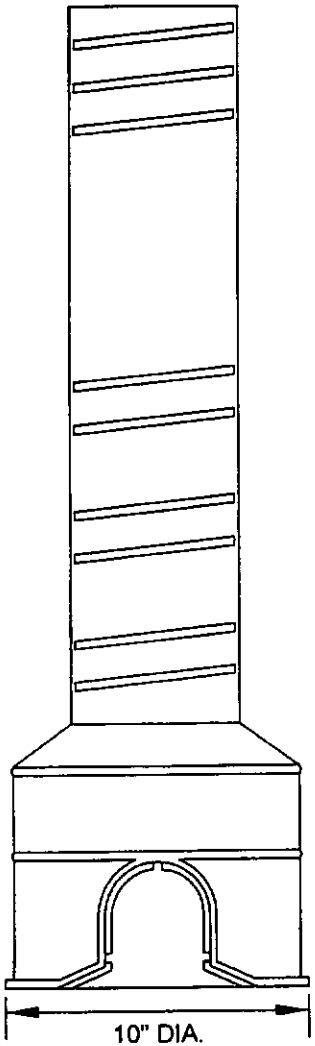

BOTTOM

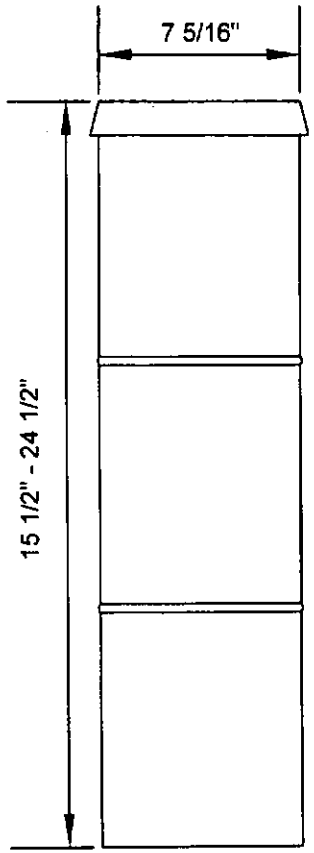

TOP

(THREAD ELIMINATED ON SLIP STYLE)

CAST IRON LID

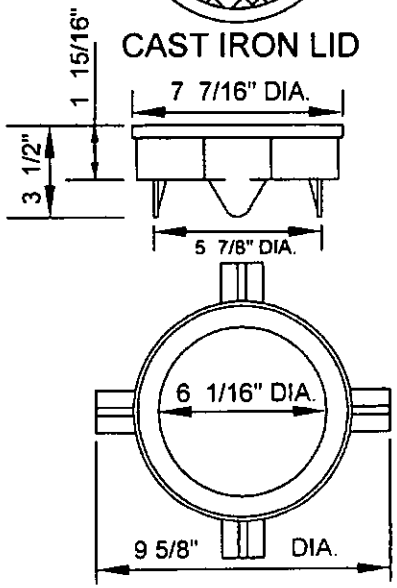

CAST IRON RING

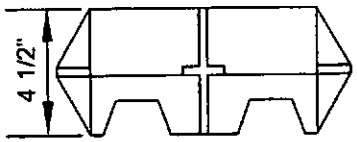

GREATER CINCINNATI WATER WORKS 12/23/03

ROADWAY BOX

CAST IRON LID & RING AND PLASTIC TOP & BOTTOM

GREATER CINCINNATI WATER WORKS
COMMERCIAL SERVICES DIVISION

APPROVED	DATE	STANDARD DRAWING
Paul Jones	1/1/04	108-2A

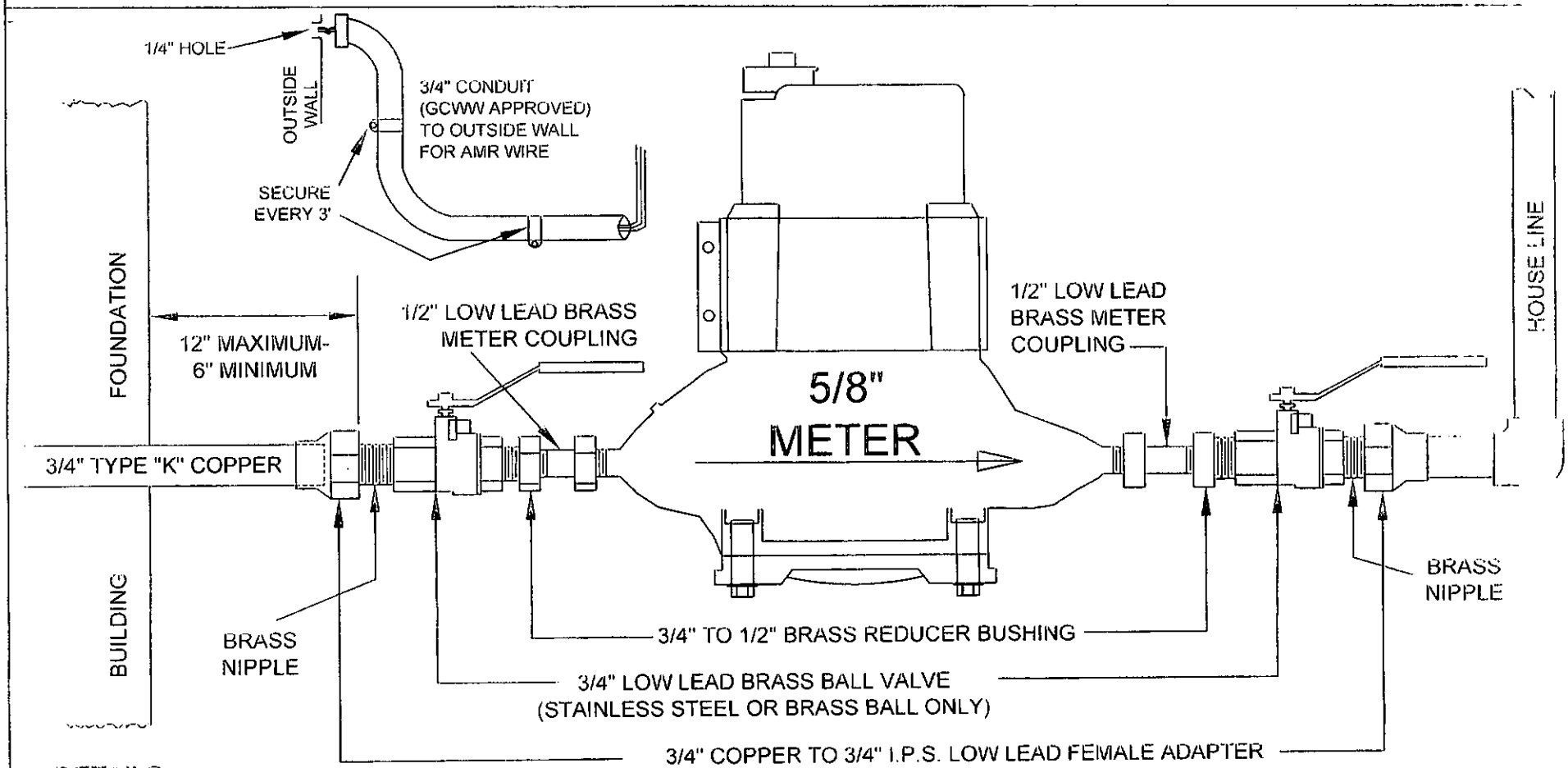

DETAILS

A) NO METER SHALL BE SET MORE THAN 36" NOR LESS THAN 12" FROM THE FLOOR. METER MUST BE INSTALLED HORIZONTALLY.

B) LOW LEAD BRASS BALL VALVES TO BE 150 LBS. S.W.P. WITH 3" HANDLES, STAINLESS STEEL OR BRASS BALL, BUNA-N-SEATS, CONFORMING TO ASTM B62 AND NSF 61.

C) LAYING LENGTH OF 5/8" METER IS 7 1/2".

D) METER MUST BE SEALED BY WATER WORKS PERSONNEL OR AUTHORIZED AGENT.

E) ANY ELECTRICAL GROUND WIRE ON THE SERVICE LINE MUST BE LOCATED BETWEEN THE INLET VALVE AND THE STREET.

F) THIS SETTING IS REQUIRED WHEN AN INSIDE METER REDUCTION IS APPROVED, OR BRANCH REPLACEMENT OCCURS.

G) A 1/4" HOLE MUST BE DRILLED THROUGH THE FOUNDATION/WALL AND AFTER RUNNING WIRE, SEALED WITH A FLEXIBLE SEALANT.

H) THE 3/4" CONDUIT SHALL BEGIN WITHIN 6" OF THE METER AND END WITHIN 6" OF THE FOUNDATION.

I) WIRE SHALL BE SUPPLIED BY THE GCWW BUT INSTALLED BY THE CONTRACTOR. THERE MUST BE 1 FOOT OF EXCESS WIRE AT THE INLET VALVE AND 1 FOOT OF EXCESS WIRE OUTSIDE OF THE FOUNDATION.

J) SEE 108-1B FOR DETAILS.

GREATER CINCINNATI WATER WORKS 12/23/03

5/8" AMR
INSIDE METER COUPLING SETTING

GREATER CINCINNATI WATER WORKS
COMMERCIAL SERVICES DIVISION

APPROVED	DATE	STANDARD DRAWING
	5-12-06	108-3

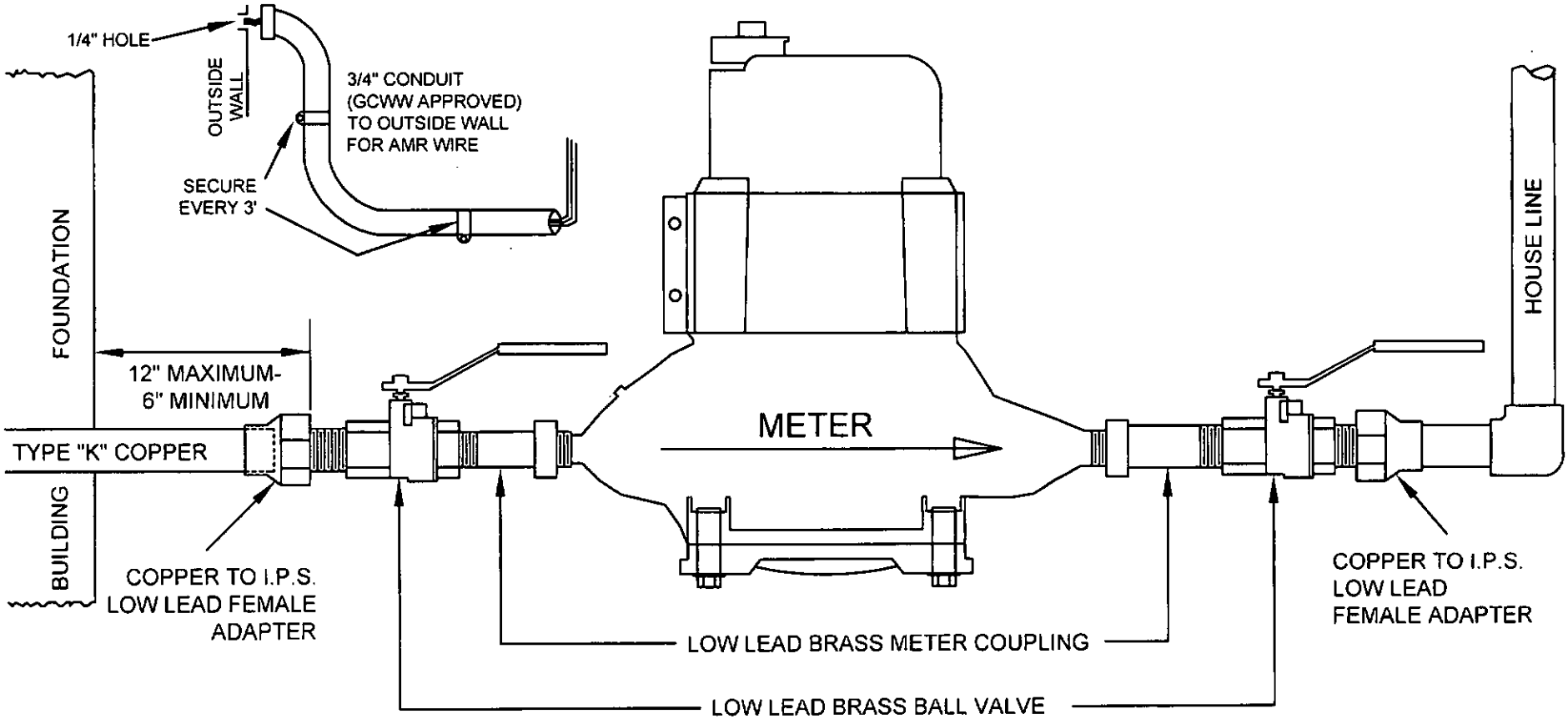

DETAILS

A) NO METER SHALL BE SET MORE THAN 36" NOR LESS THAN 12" FROM THE FLOOR. METER MUST BE INSTALLED HORIZONTALLY.
B) LOW LEAD BRASS BALL VALVES TO BE 150 LBS. SWP WITH 3" HANDLES, STAINLESS STEEL OR BRASS BALL, BUNA-N-SEATS, CONFORMING TO ASTM B62 AND NSF 61. VALVES MUST BE THE SAME SIZE AS THE BRANCH.
C) LAYING LENGTH OF METERS; 3/4" METER IS 9", 1" METER IS 10 3/4".
D) METER MUST BE SEALED BY WATER WORKS PERSONNEL OR AUTHORIZED AGENT.
E) ANY ELECTRICAL GROUND WIRE ON THE SERVICE LINE MUST BE LOCATED BETWEEN THE INLET VALVE AND THE STREET.
F) THIS SETTING IS REQUIRED WHEN AN INSIDE METER REDUCTION IS APPROVED OR BRANCH REPLACEMENT OCCURS.
G) A 1/4" HOLE MUST BE DRILLED THROUGH THE FOUNDATION/WALL AND AFTER RUNNING WIRE, SEALED WITH A FLEXIBLE SEALANT.
H) A 3/4" CONDUIT SHALL BEGIN WITHIN 6" OF THE METER AND END WITHIN 6" OF THE FOUNDATION/WALL.
I) WIRE SHALL BE SUPPLIED BY THE GCWW BUT INSTALLED BY THE CONTRACTOR. THERE MUST BE 1' OF EXCESS WIRE AT THE INLET VALVE AND 1' OF EXCESS WIRE OUTSIDE OF THE FOUNDATION/WALL.
J) SEE 108-1B FOR DETAILS.

GREATER CINCINNATI WATER WORKS 12/23/03	**3/4" AND 1" AMR INSIDE METER COUPLING SETTING**		
	GREATER CINCINNATI WATER WORKS COMMERCIAL SERVICES DIVISION		
	APPROVED	DATE 5-12-06	STANDARD DRAWING 108-3A

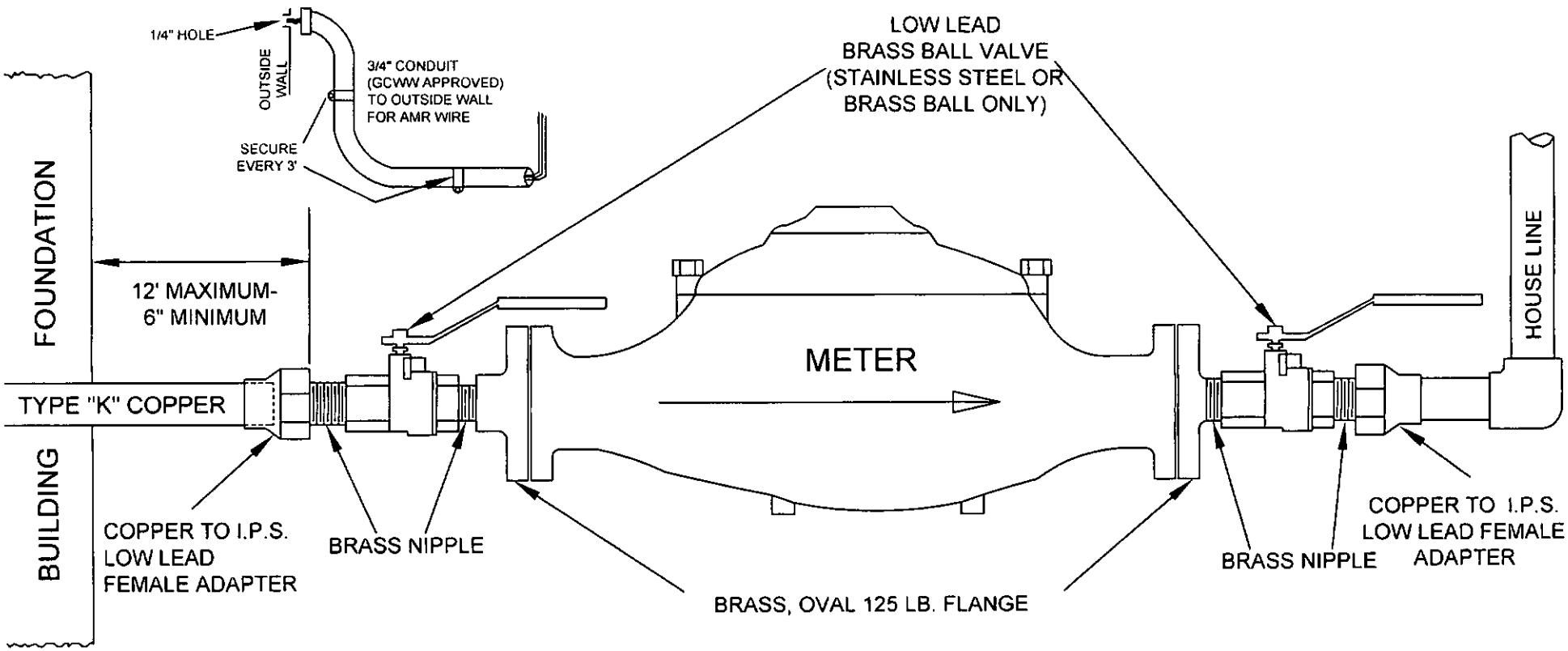

DETAILS

A) NO METER SHALL BE SET MORE THAN 36" NOR LESS THAN 12" FROM THE FLOOR. METER MUST BE INSTALLED HORIZONTALLY.
B) LOW LEAD BRASS BALL VALVES TO BE 150 LBS. S.W.P. WITH 3" HANDLES, STAINLESS STEEL OR BRASS BALL, BUNA-N-SEATS, CONFORMING TO ASTM B62 NAD NSF 61.
C) LAYING LENGTH OF METERS; 1 1/2" METER IS 13", 2" METER IS 17".
D) METER MUST BE SEALED BY WATER WORKS PERSONNEL OR AUTHORIZED AGENT.
E) ANY ELECTRICAL GROUND WIRE ON THE SERVICE LINE MUST BE LOCATED BETWEEN THE INLET VALVE AND THE STREET.
F) IT IS REQUIRED TO USE THIS SETTING WHEN AN INSIDE METER REDUCTION IS APPROVED, OR BRANCH REPLACEMENT OCCURS, PROVIDED BALL VALVES (AS SPECIFIED BELOW) ARE USED.
G) A ROADWAY BOX MUST BE INSTALLED OVER THE CURB STOP.
H) WHEN A METER SMALLER THAN THE BRANCH SIZE IS USED, THE PIPE REDUCER SHALL BE LOCATED WITHIN 4" OF THE INLET VALVE.
I) WIRE SHALL BE SUPPLIED BY THE GCWW BUT INSTALLED BY THE CONTRACTOR. THERE MUST BE 1' OF EXCESS WIRE AT THE INLET VALVE AND 1' OF EXCESS WIRE OUTSIDE OF THE FOUNDATION.
J) CONDUIT SHALL EXTEND WITHIN 6" OF METER AND OUTSIDE WALL.
K) A 1/4" HOLE MUST BE DRILLED THROUGH THE WALL AND FILLED WITH FLEXIBLE SEALANT.
L) SEE 108-1B FOR DETAILS.

GREATER CINCINNATI WATER WORKS 12/23/03	**1 1/2" AND 2" AMR INSIDE METER FLANGED SETTING**		
	GREATER CINCINNATI WATER WORKS COMMERCIAL SERVICES DIVISION		
	APPROVED	DATE 5-12-06	STANDARD DRAWING 108-3B

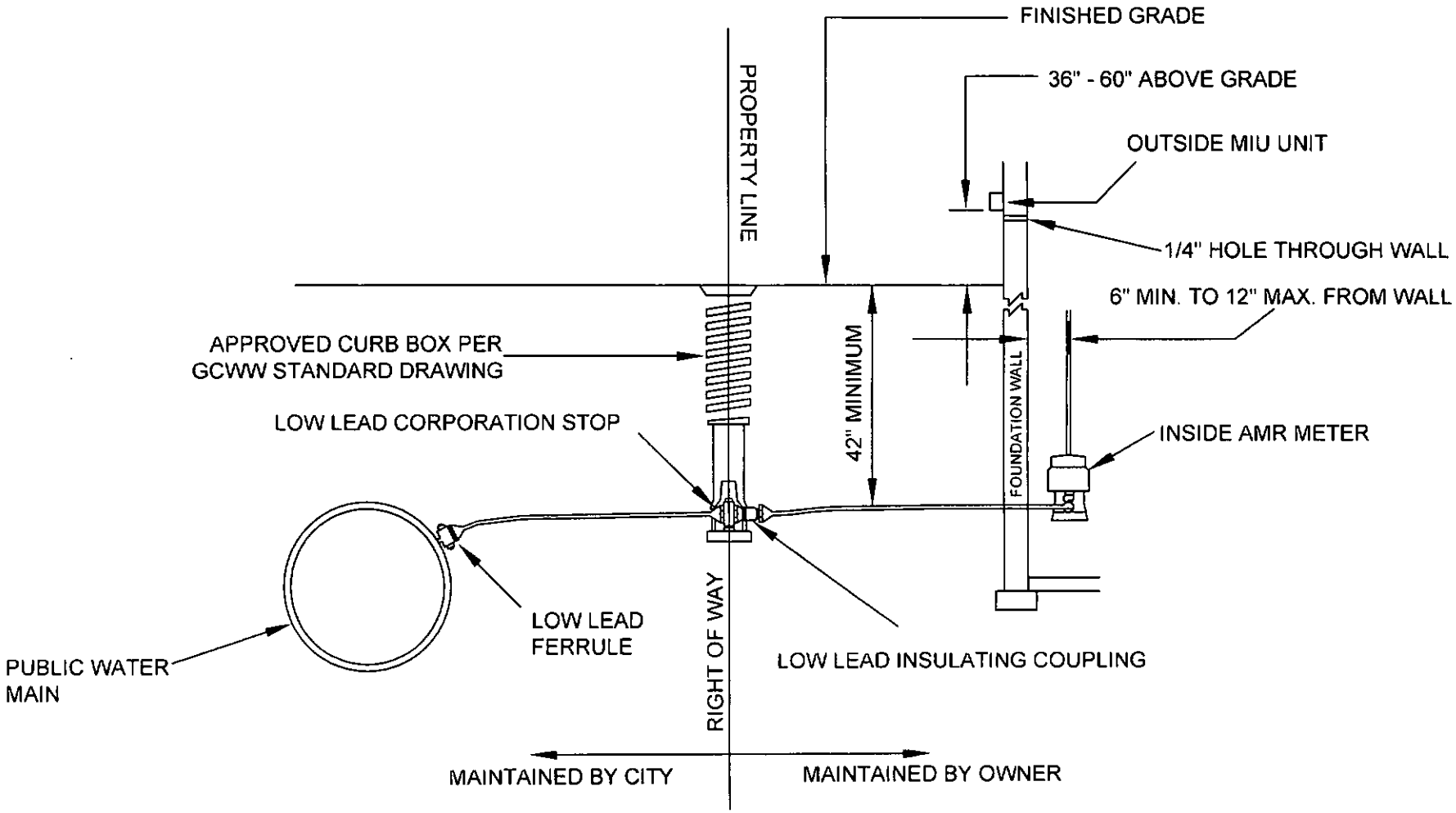

DETAILS

A) SEE 108-1B FOR MATERIAL & CONSTRUCTION SPECIFICATIONS.
B) SEE 108-3 FOR METER COUPLING SETTING DETAILS FOR 5/8" METERS.
C) SEE 108-3A FOR METER COUPLING SETTING DETAILS FOR 3/4" & 1" METERS.
E) SEE 108-3B FOR METER COUPLING SETTING DETAILS FOR 1 1/2" & 2" METERS.
F) INSULATING COUPLING TO BE INSTALLED ON HOUSE SIDE OF CORPORATION STOP.
G) A 1/4" HOLE MUST BE DRILLED THROUGH BUILDING FOUNDATION OR WALL AND FILLED WITH FLEXIBLE SEALANT.

GREATER CINCINNATI WATER WORKS 12/23/03	**INSIDE AMR 5/8" - 2" METER SETTING**		
	GREATER CINCINNATI WATER WORKS COMMERCIAL SERVICES DIVISION		
	APPROVED	DATE 5-12-06	STANDARD DRAWING 108-4

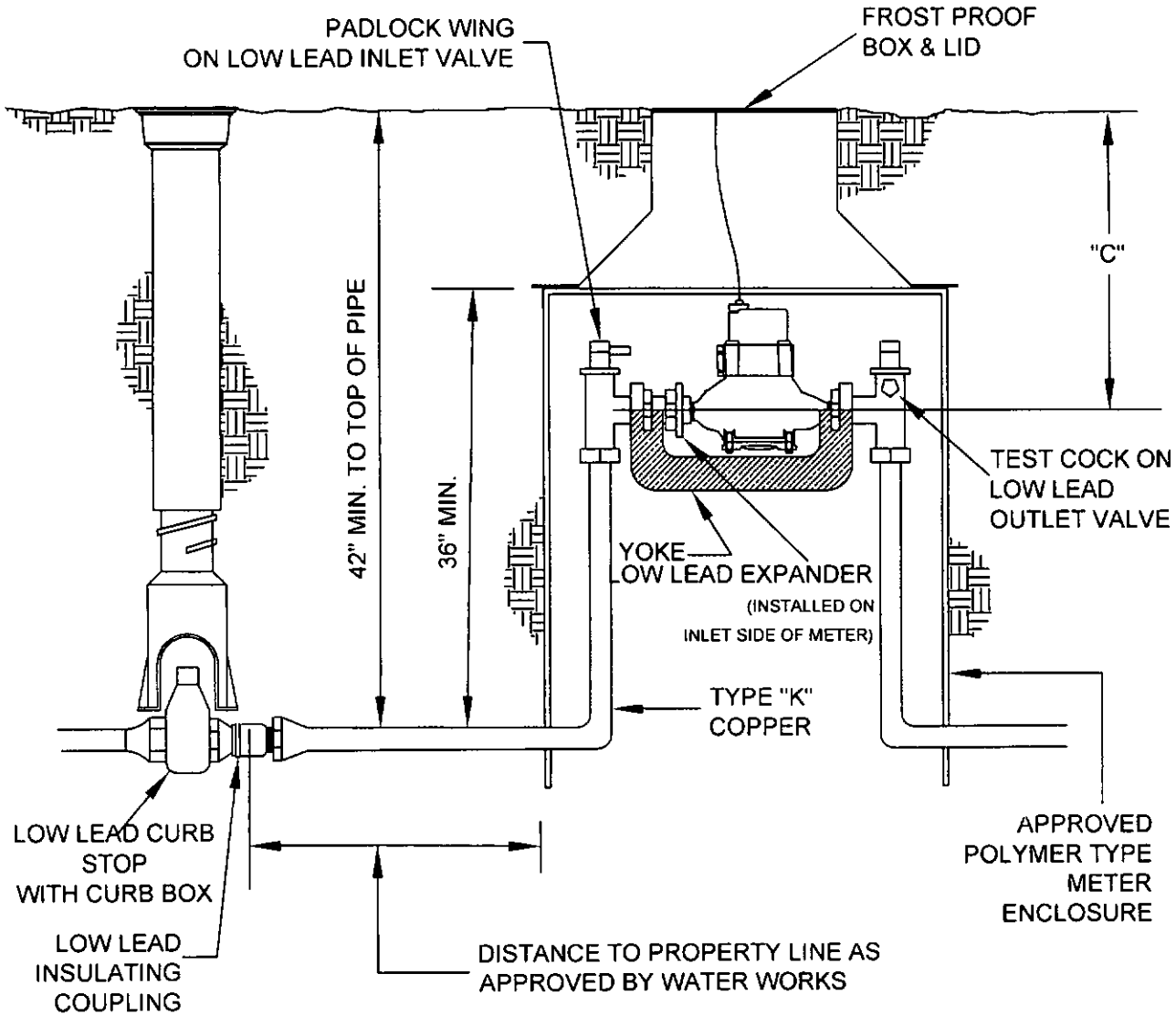

DETAILS

A) SEE 108-1B & 108-1C FOR MATERIAL & CONSTRUCTION SPECIFICATIONS.

B) METER TO BE SET AT RIGHT ANGLES TO RIGHT OF WAY AND MUST BE LEVEL AND CENTERED WITH YOKE VALVES UPRIGHT. METER TO BE 15" -19" BELOW FINISHED GRADE.

C) FROST PROOF SETTING IN AN EMBANKMENT MAY REQUIRE A RETAINING WALL.

D) WHEN A METER SMALLER THAN THE BRANCH SIZE IS USED, AN AY McDONALD 74602Y REDUCING YOKE VALVE SHALL BE INSTALLED. OR IF A SILVER SOLDER REDUCING FITTING IS USED, IT SHALL BE LOCATED ON THE RISER WITHIN 4" OF THE INLET VALVE.

E) METER ENCLOSURE COVER TO BE FORD METER BOX #FW-3 OR AN AY McDONALD 74-M3W. THE OUTER LID MUST BE ARMORCAST A6-449 GCWW LID OR AN APPROVED EQUAL.

F) HEAVY DUTY OUTER LIDS ARE REQUIRED IN PAVED OR TRAVELED AREAS.

G) STOP BOX OR ROADWAY BOX MUST BE INSTALLED.

METER SIZE	METER ENCLOSURE DIAMETER	"C"
5/8"	20"	15" TO 19"
3/4"	20"	15" TO 19"

GREATER CINCINNATI WATER WORKS 12/23/03

OUTSIDE AMR METER BOX SETTING FOR 5/8" & 3/4" METERS

GREATER CINCINNATI WATER WORKS
COMMERCIAL SERVICES DIVISION

APPROVED	DATE	STANDARD DRAWING
Joe Sutter	5-12-06	108-5

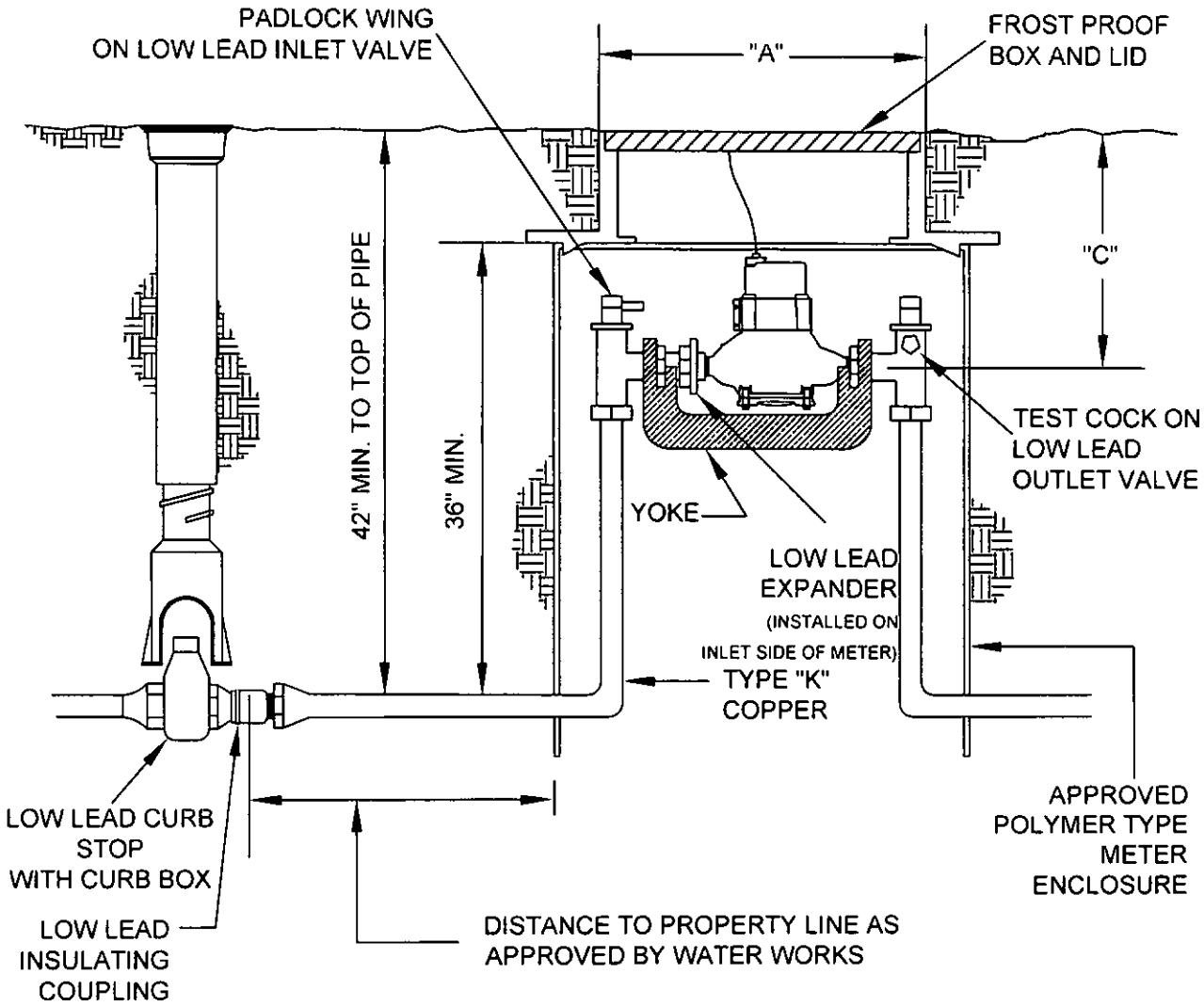

DETAILS

A) SEE 108-1B & 108-1C FOR MATERIAL & CONSTRUCTION SPECIFICATIONS.

B) METER TO BE SET AT RIGHT ANGLES TO RIGHT OF WAY AND MUST BE LEVEL AND CENTERED WITH YOKE VALVES UPRIGHT. METER TO BE 15" -19" BELOW FINISHED GRADE.

C) FROST PROOF SETTING IN AN EMBANKMENT MAY REQUIRE A RETAINING WALL.

D) WHEN A METER SMALLER THAN THE BRANCH SIZE IS USED, AN AY McDONALD 74602Y REDUCING YOKE VALVE SHALL BE INSTALLED. OR IF A SILVER SOLDER REDUCING FITTING IS USED, IT SHALL BE LOCATED ON THE RISER WITHIN 4" OF THE INLET VALVE.

E) METER ENCLOSURE COVER TO BE FORD METER BOX #24 MONITOR COVER OR AN AY McDONALD 74-M3W. THE OUTER LID MUST BE ARMORCAST A6-459 GCWW LID OR AN APPROVED EQUAL.

F) HEAVY DUTY OUTER LIDS ARE REQUIRED IN PAVED OR TRAVELED AREAS.

G) STOP BOX OR ROADWAY BOX MUST BE INSTALLED.

METER SIZE	METER ENCLOSURE DIAMETER	"A"	"C"
1"	24"	20 3/4"	15" TO 19"

GREATER CINCINNATI WATER WORKS 12/23/03

OUTSIDE AMR METER BOX SETTING FOR 1" METERS

GREATER CINCINNATI WATER WORKS
COMMERCIAL SERVICES DIVISION

APPROVED	DATE	STANDARD DRAWING
Joe Sotto	5-12-06	108-5A

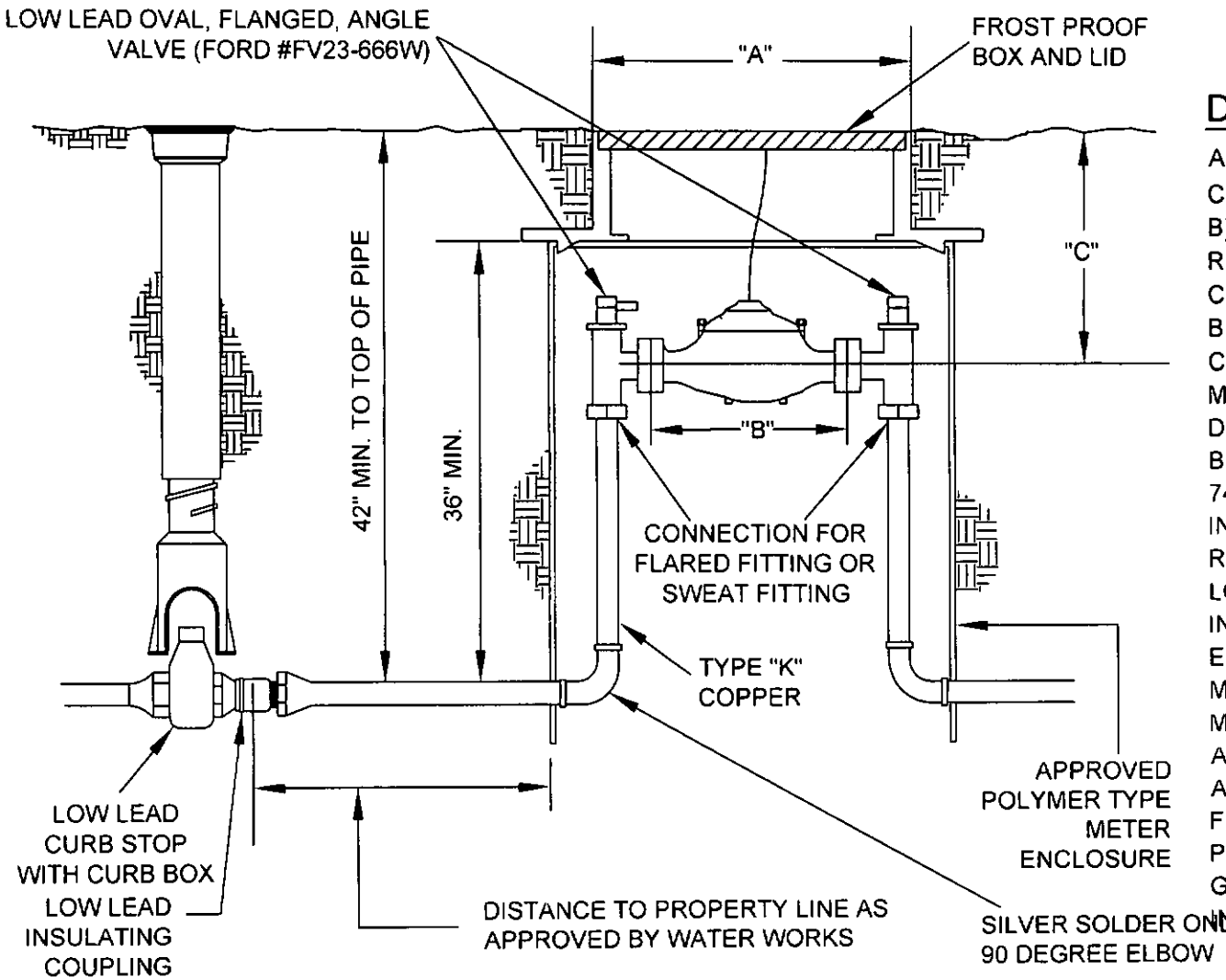

DETAILS

A) SEE 108-1B & 108-1C FOR MATERIAL & CONSTRUCTION SPECIFICATIONS.
B) METER TO BE SET AT RIGHT ANGLES TO RIGHT OF WAY AND MUST BE LEVEL AND CENTERED WITH VALVES UPRIGHT. METER TO BE 15" -19" BELOW FINISHED GRADE.
C) FROST PROOF SETTING IN AN EMBANKMENT MAY REQUIRE A RETAINING WALL.
D) WHEN A METER SMALLER THAN THE BRANCH SIZE IS USED, AN AY McDONALD 74602Y REDUCING YOKE VALVE SHALL BE INSTALLED. OR IF A SILVER SOLDER REDUCING FITTING IS USED, IT SHALL BE LOCATED ON THE RISER WITHIN 4" OF THE INLET VALVE.
E) METER ENCLOSURE COVER TO BE FORD METER BOX #24 MONITOR COVER OR AN AY McDONALD 74-M3W. THE OUTER LID MUST BE ARMORCAST A6-459 GCWW LID OR AN APPROVED EQUAL.
F) HEAVY DUTY OUTER LIDS ARE REQUIRED IN PAVED OR TRAVELED AREAS.
G) STOP BOX OR ROADWAY BOX MUST BE INSTALLED.

METER SIZE	METER ENCLOSURE DIAMETER	"A"	"B"	"C"
1 1/2"	24"	20 3/4"	13"	15" TO 19"
2"	30"	20 3/4"	17"	15" TO 19"

GREATER CINCINNATI WATER WORKS 12/23/03

OUTSIDE AMR METER BOX SETTING FOR 1 1/2" AND 2" METERS

GREATER CINCINNATI WATER WORKS
COMMERCIAL SERVICES DIVISION

APPROVED | DATE 5-12-06 | STANDARD DRAWING 108-5B

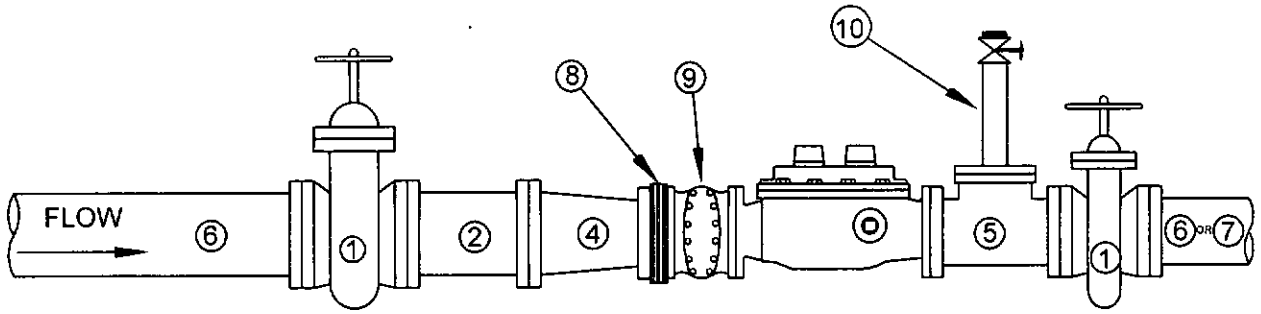

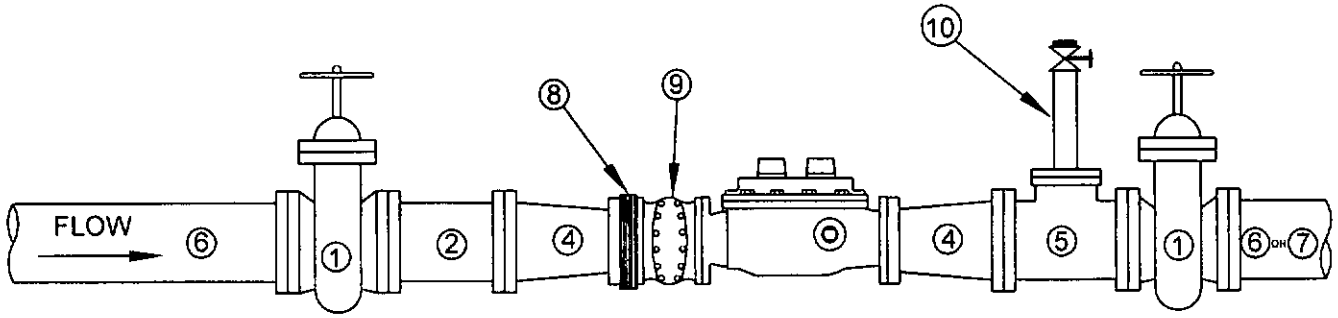

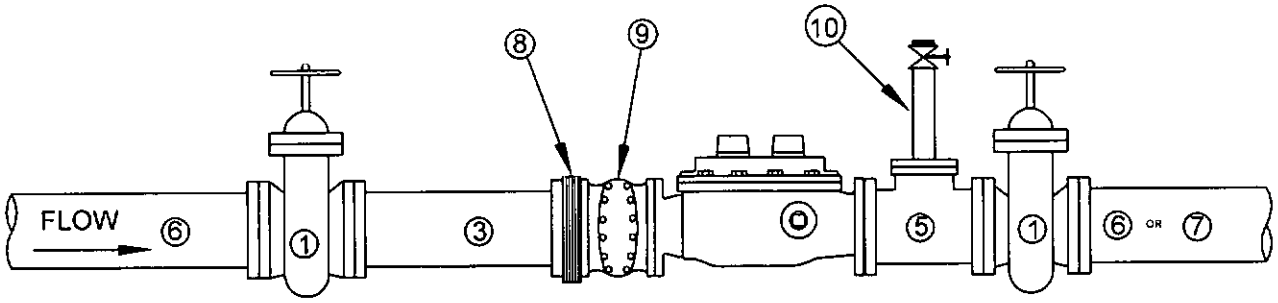

TEST TEE DETAIL

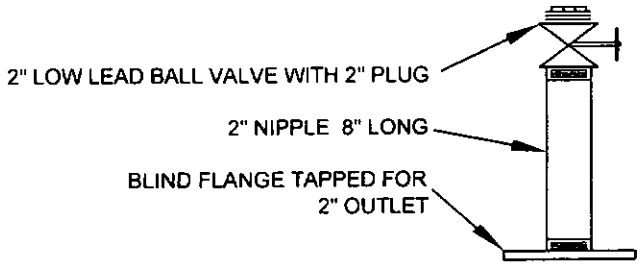

DETAILS:

1) OS & Y FLANGED GATE VALVE WITH WHEEL OPERATOR. INLET VALVE MUST BE ANCHORED THROUGH WALL.

2) FLANGED SPOOL 6" LONG WITH 1/2" TAPPED OUTLET

3) FLANGED SPOOL 12" LONG WITH 1/2" TAPPED OUTLET

4) FLANGED REDUCING SPOOL

5) FLANGED TEST TEE

6) FLANGED BY PLAIN END ADAPTER 3' OR 6' LONG

7) FLANGED BY MECHANICAL JOINT ADAPTER, OPTIONAL

8) SPACER (PROVIDED WITH METER) MUST BE INSTALLED SIDEWAYS

9) STRAINER (PROVIDED WITH METER) MUST BE INSTALLED SIDEWAYS.

10) TEST TEE (SEE DETAIL)

11) STAINLESS STEEL BOLTS, WASHERS AND NUTS MUST BE USED FOR ALL CONNECTIONS IN METER SETTING

GREATER CINCINNATI WATER WORKS
12/23/03

PIPING ARRANGEMENT
DOMESTIC METERS 3" & LARGER

GREATER CINCINNATI WATER WORKS
COMMERCIAL SERVICES DIVISION

APPROVED	DATE	STANDARD DRAWING
	5-12-06	108-6

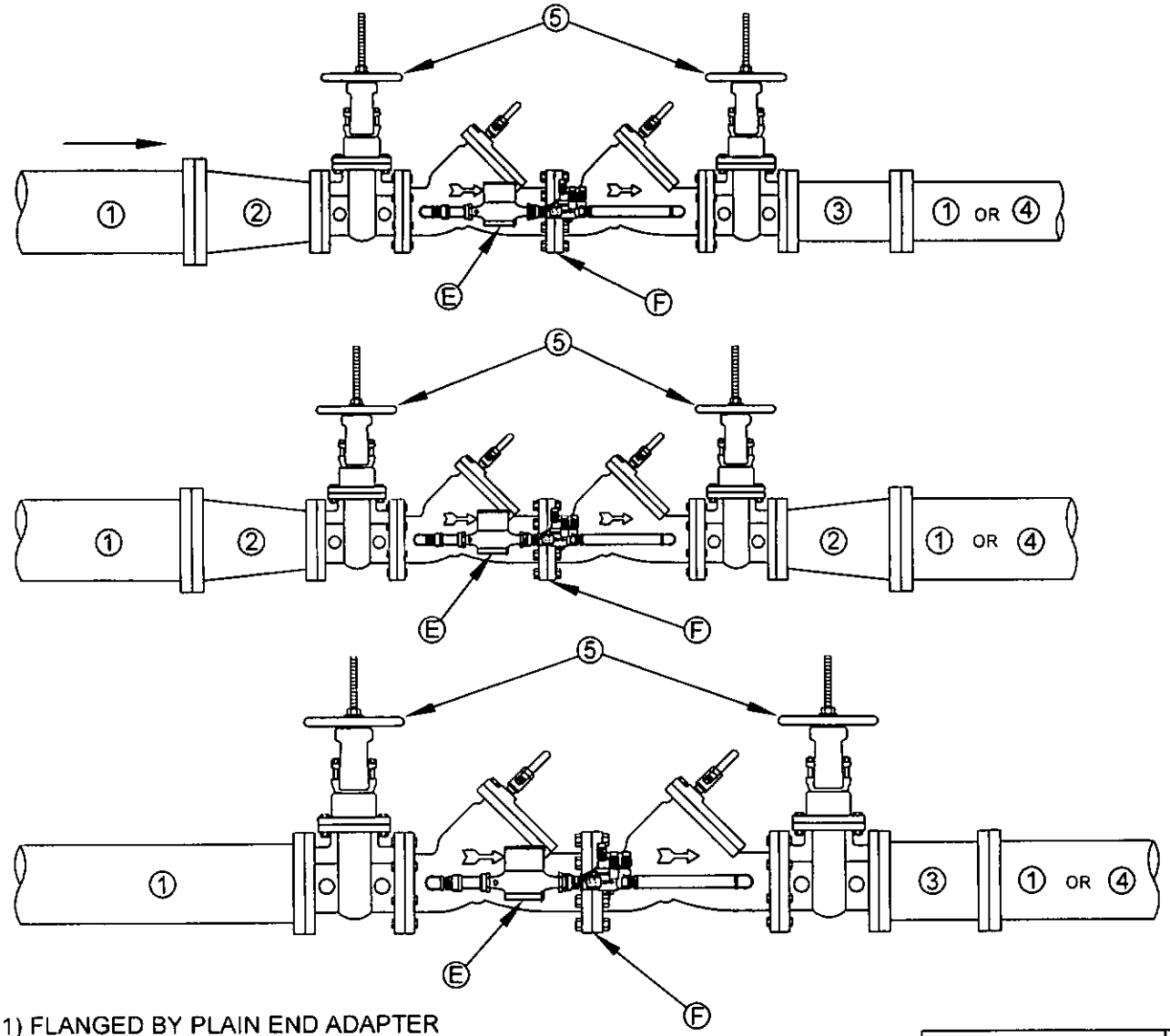

1) FLANGED BY PLAIN END ADAPTER

2) FLANGED REDUCING SPOOL

3) FLANGED SPOOL, 12" LONG

4) FLANGED BY MECHANICAL JOINT (OPTIONAL)

5) VALVES MUST BE OS & Y

DETAILS:

A) ANY PUMPER CONNECTION MUST BE INSTALLED ON SIDE OPPOSITE METER ASSEMBLY AND DOWNSTREAM OF OUTLET VALVE.

B) IF A PUMPER CONNECTION IS USED IN A PIT, THE SPOOL "3" MAY BE ELIMINATED.

C) IF A PUMPER CONNECTION IS NOT USED IN A PIT, THE DUCTILE IRON SPOOL "3" SHALL BE INSTALLED DIRECTLY TO THE DOWNSTREAM SIDE OF THE OUTLET VALVE.

D) IF A POST INDICATOR IS USED ON ANY VALVE WITHIN A PIT, IT MUST BE A TYPE THAT WILL ATTACH TO THE WHEEL OPERATOR AND ALLOW OPERATION OF THE VALVE FROM INSIDE THE PIT. THE BASE OF THE POST INDICATOR SHALL NOT OBSTRUCT THE PIT OPENING.

E) METER TO BE PURCHASED FROM AND INSTALLED BY GCWW.

F) DOUBLE CHECK DETECTOR CHECK AS APPROVED BY GCWW.

GREATER CINCINNATI WATER WORKS
12/23/03

PIPING ARRANGEMENT

DOUBLE CHECK DETECTOR CHECK ASSEMBLY

GREATER CINCINNATI WATER WORKS
COMMERCIAL SERVICES DIVISION

APPROVED	DATE	STANDARD DRAWING
	5-12-06	108-7

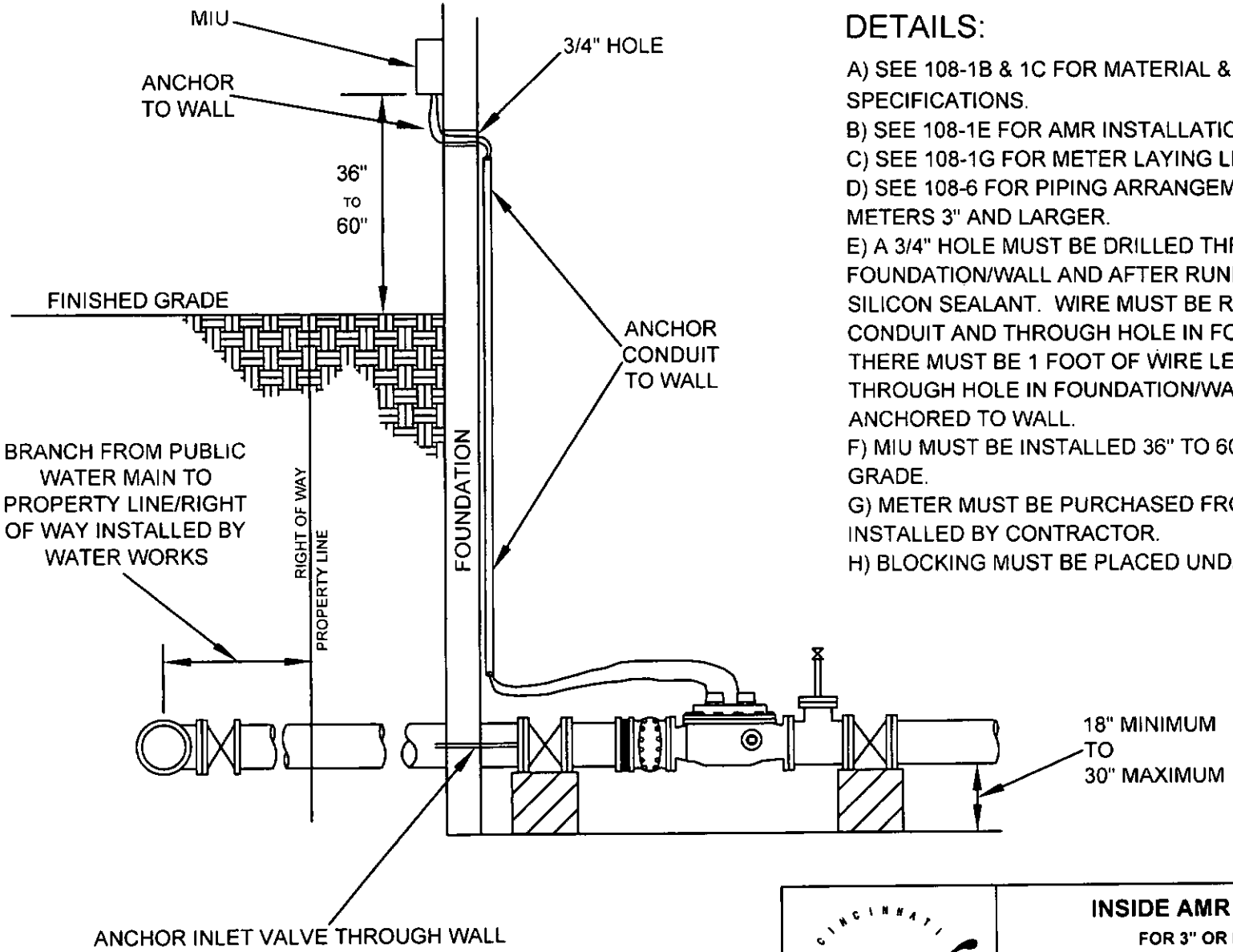

DETAILS:

A) SEE 108-1B & 1C FOR MATERIAL & CONSTRUCTION SPECIFICATIONS.
B) SEE 108-1E FOR AMR INSTALLATION DETAILS.
C) SEE 108-1G FOR METER LAYING LENGTH REQUIREMENTS.
D) SEE 108-6 FOR PIPING ARRANGEMENTS FOR DOMESTIC METERS 3" AND LARGER.
E) A 3/4" HOLE MUST BE DRILLED THROUGH BUILDING FOUNDATION/WALL AND AFTER RUNNING WIRE, FILLED WITH SILICON SEALANT. WIRE MUST BE RUN THROUGH 3/4" CONDUIT AND THROUGH HOLE IN FOUNDATION/WALL. THERE MUST BE 1 FOOT OF WIRE LEFT AT METER AND THROUGH HOLE IN FOUNDATION/WALL. CONDUIT SHALL BE ANCHORED TO WALL.
F) MIU MUST BE INSTALLED 36" TO 60" ABOVE FINISHED GRADE.
G) METER MUST BE PURCHASED FROM GCWW AND INSTALLED BY CONTRACTOR.
H) BLOCKING MUST BE PLACED UNDER VALVES.

GREATER CINCINNATI WATER WORKS 12/23/03

INSIDE AMR METER SETTING
FOR 3" OR LARGER METERS

GREATER CINCINNATI WATER WORKS
COMMERCIAL SERVICES DIVISION

APPROVED	DATE	STANDARD DRAWING
	5-12-06	108-8

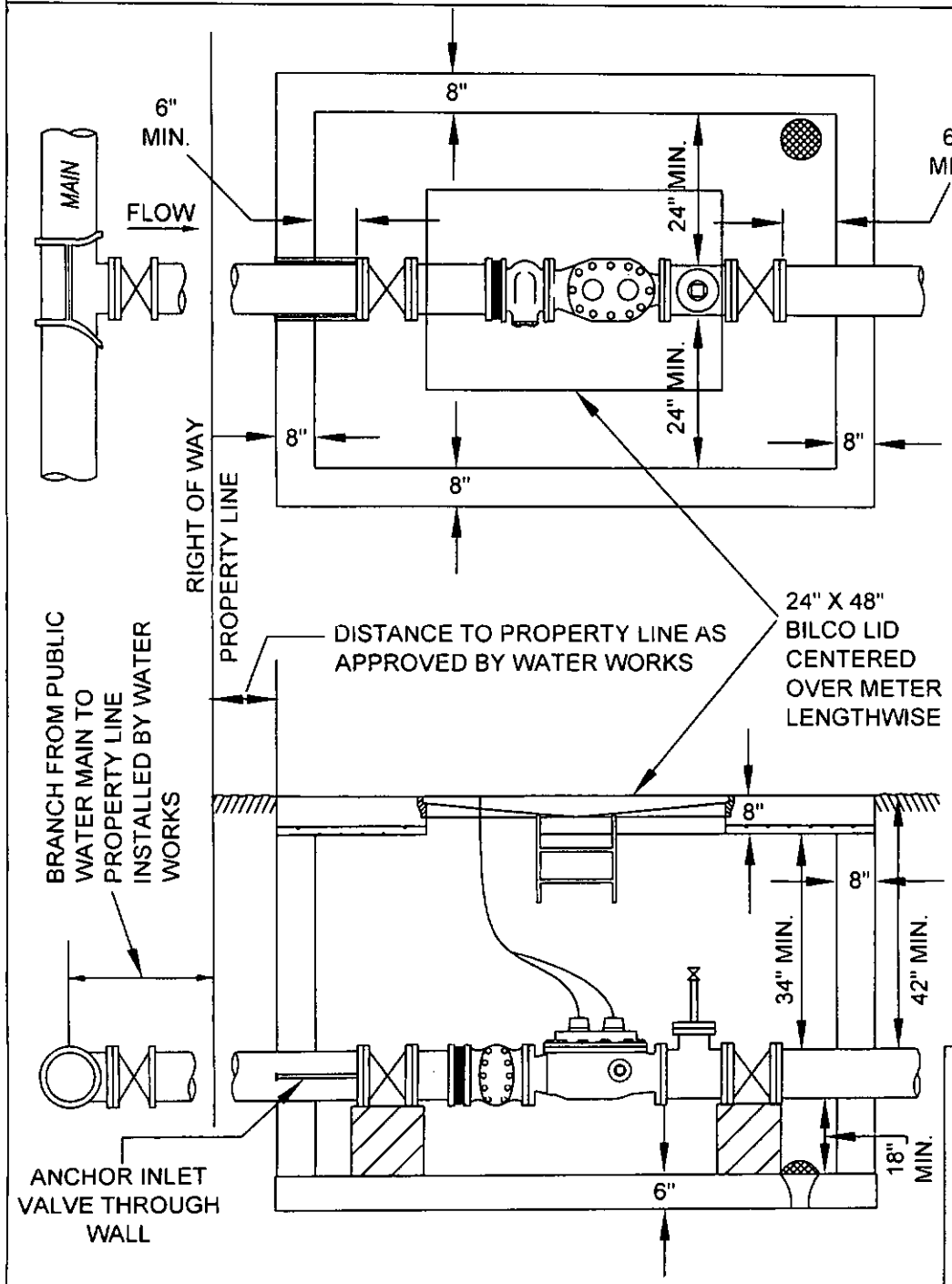

DETAILS:

A) SEE 108-1, 108-1A, 108-1B & 108-1C FOR MATERIAL AND CONSTRUCTION SPECIFICATIONS.

B) SEE 108-1E FOR AMR INSTALLATION DETAILS.

C) SEE 108-1G FOR METER LAYING LENGTH REQUIREMENTS.

D) SEE 108-6 FOR PIPING ARRANGEMENTS FOR DOMESTIC METERS 3" AND LARGER.

E) BLOCKING MUST BE PLACED UNDER VALVES.

F) METER MUST BE PURCHASED FROM GCWW AND INSTALLED BY CONTRACTOR.

G) A FACTORY DRILLED 1 ¾" HOLE MUST BE DRILLED IN THE BILCO LID IF THE PIT IS LOCATED IN AN UNPAVED AREA.

H) LID MUST BE CENTERED LENGTHWISE OVER THE METER.

I) TEST TEE (SEE DETAIL 108-6)

GREATER CINCINNATI WATER WORKS 12/23/03

OUTSIDE AMR METER SETTING

FOR 3" OR LARGER METERS

GREATER CINCINNATI WATER WORKS

COMMERCIAL SERVICES DIVISION

APPROVED	DATE	STANDARD DRAWING
	5-12-06	108-8A

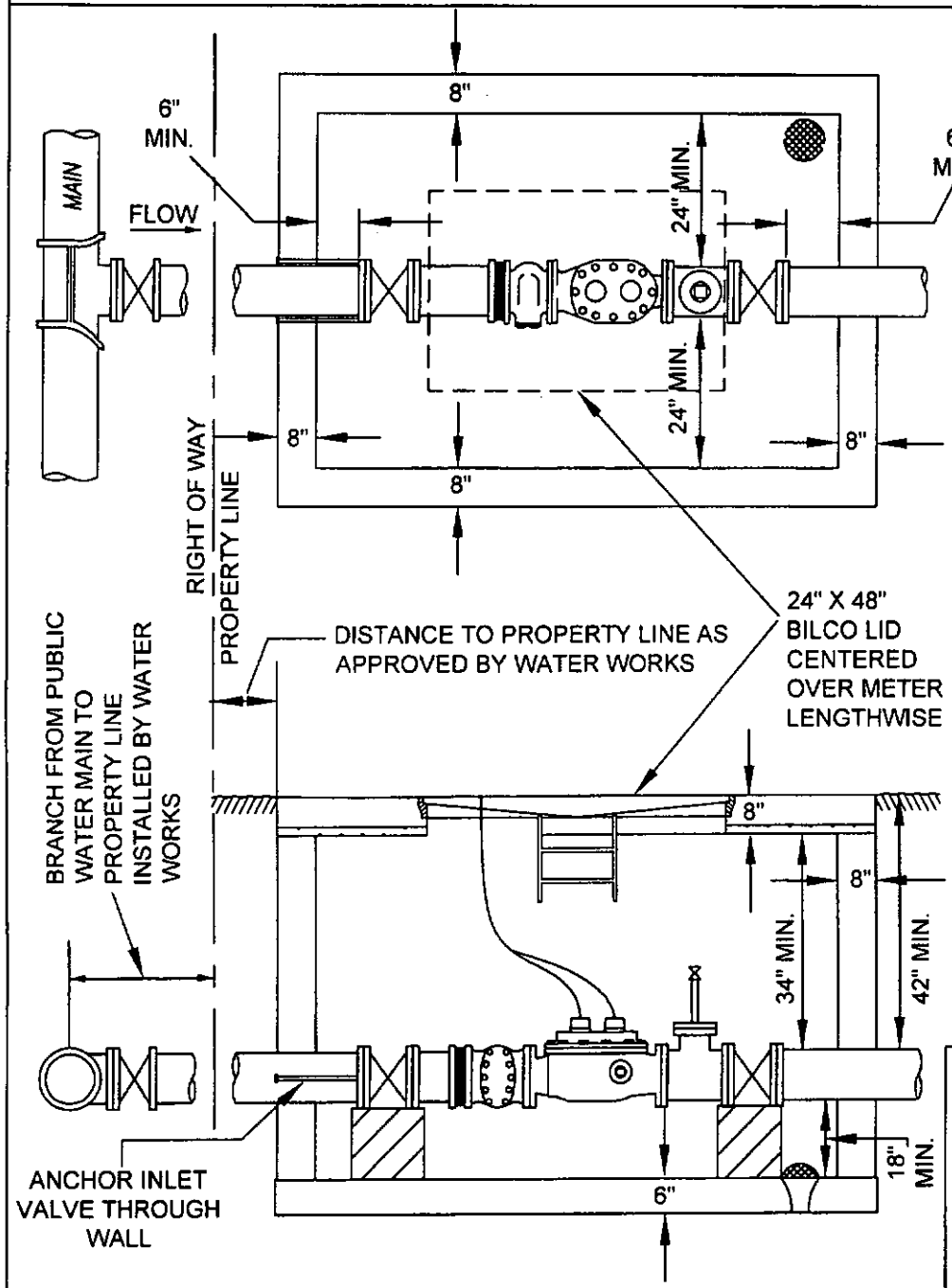

DETAILS:

A) SEE 108-1, 108-1A, 108-1B & 108-1C FOR MATERIAL AND CONSTRUCTION SPECIFICATIONS.

B) SEE 108-1E FOR AMR INSTALLATION DETAILS.

C) SEE 108-1G FOR METER LAYING LENGTH REQUIREMENTS.

D) SEE 108-6 FOR PIPING ARRANGEMENTS FOR DOMESTIC METERS 3" AND LARGER.

E) BLOCKING MUST BE PLACED UNDER VALVES.

F) METER MUST BE PURCHASED FROM GCWW AND INSTALLED BY CONTRACTOR.

G) A FACTORY DRILLED 1 ¾" HOLE MUST BE DRILLED IN THE BILCO LID IF THE PIT IS LOCATED IN AN UNPAVED AREA.

H) LID MUST BE CENTERED LENGTHWISE OVER THE METER.

GREATER CINCINNATI WATER WORKS 12/23/03

OUTSIDE AMR METER SETTING

FOR 3" OR LARGER METERS

GREATER CINCINNATI WATER WORKS

COMMERCIAL SERVICES DIVISION

APPROVED	DATE	STANDARD DRAWING
Paul Jones	1/1/04	108-8A

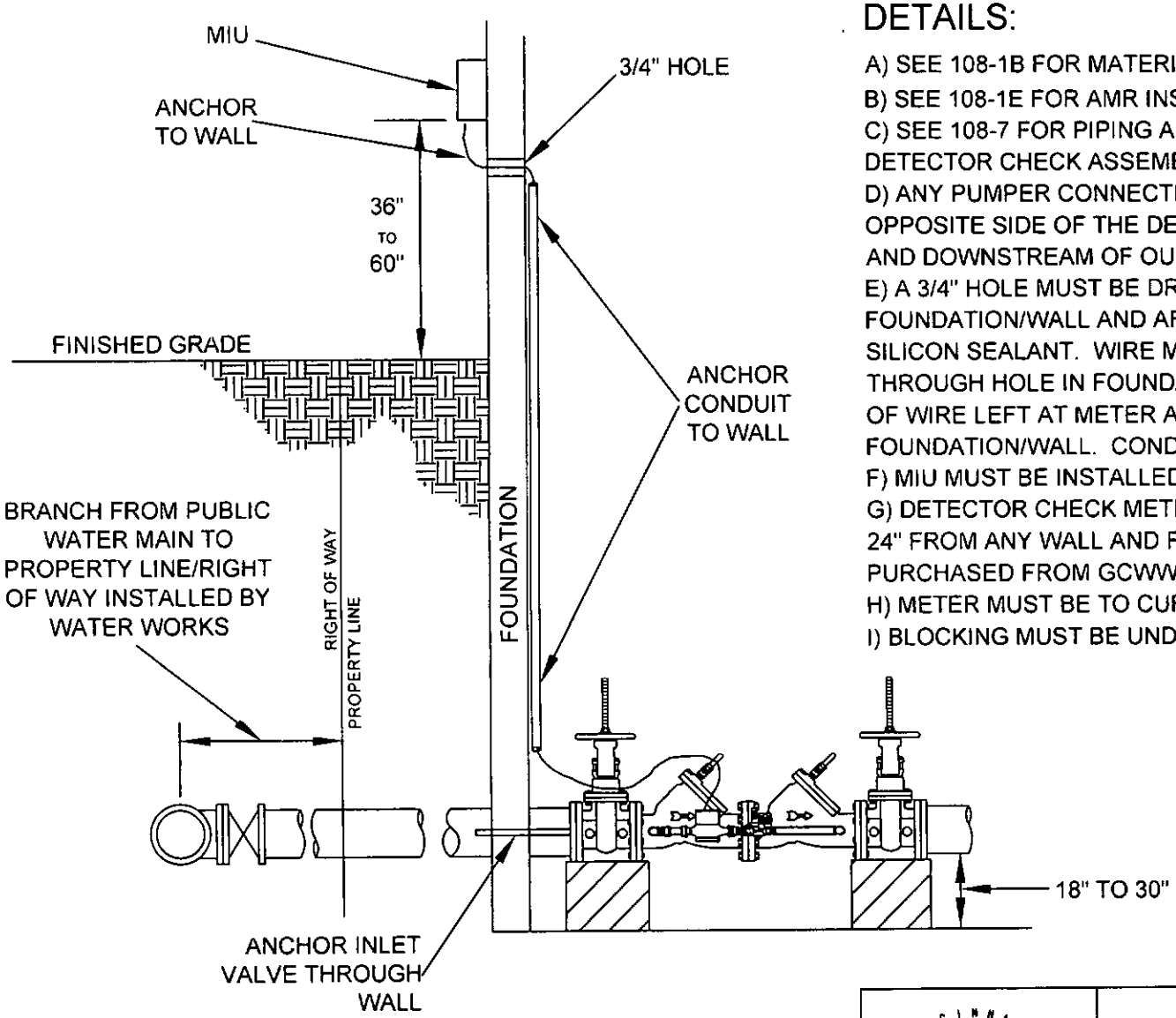

DETAILS:

A) SEE 108-1B FOR MATERIAL & CONSTRUCTION SPECIFICATIONS.
B) SEE 108-1E FOR AMR INSTALLATION DETAILS.
C) SEE 108-7 FOR PIPING ARRANGEMENTS FOR DOUBLE CHECK DETECTOR CHECK ASSEMBLY.
D) ANY PUMPER CONNECTION MUST BE INSTALLED ON THE OPPOSITE SIDE OF THE DETECTOR CHECK METER ASSEMBLY AND DOWNSTREAM OF OUTLET VALVE.
E) A 3/4" HOLE MUST BE DRILLED THROUGH BUILDING FOUNDATION/WALL AND AFTER RUNNING WIRE, FILLED WITH SILICON SEALANT. WIRE MUST BE RUN THROUGH 3/4" CONDUIT THROUGH HOLE IN FOUNDATION/WALL. THERE MUST BE 1 FOOT OF WIRE LEFT AT METER AND THROUGH HOLE IN FOUNDATION/WALL. CONDUIT SHALL BE ANCHORED TO WALL.
F) MIU MUST BE INSTALLED 36" TO 60" ABOVE FINISHED GRADE.
G) DETECTOR CHECK METER MUST BE INSTALLED A MINIMUM OF 24" FROM ANY WALL AND FACING INTO THE ROOM. METER TO BE PURCHASED FROM GCWW AND INSTALLED BY CONTRACTOR.
H) METER MUST BE TO CURRENT GCWW SPECIFICATIONS.
I) BLOCKING MUST BE UNDER VALVES.

GREATER CINCINNATI WATER WORKS 12/23/03

INSIDE AMR DOUBLE CHECK DETECTOR CHECK VALVE SETTING

GREATER CINCINNATI WATER WORKS
COMMERCIAL SERVICES DIVISION

APPROVED	DATE	STANDARD DRAWING
	5-12-06	108-8B

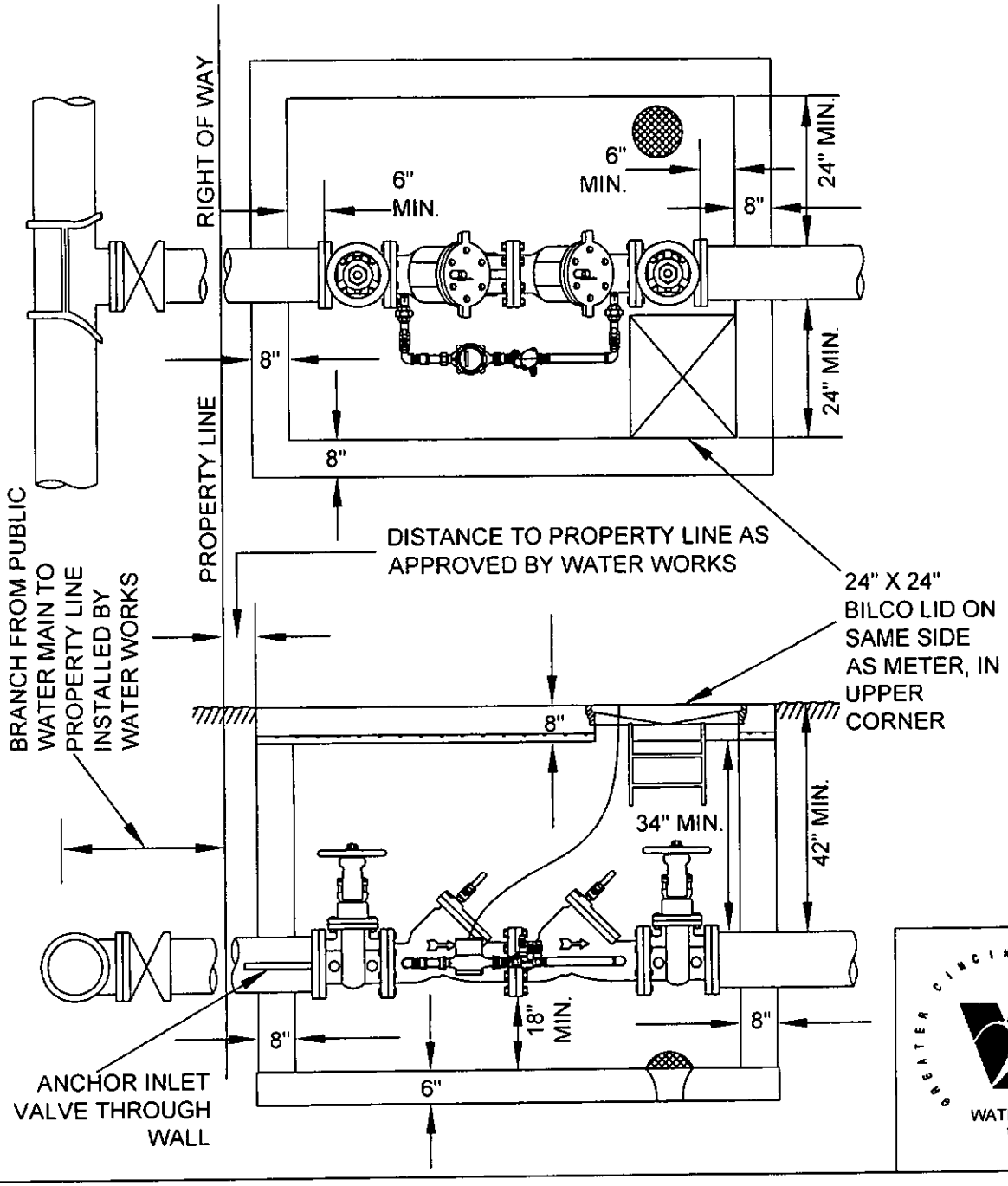

DETAILS:

A) SEE 108-1, 108-1A, 108-1B & 108-1C FOR MATERIAL AND CONSTRUCTION SPECIFICATIONS.

B) SEE 108-7 FOR PIPING ARRANGEMENT.

C) SEE 108-1E FOR AMR INSTALLATION SPECIFICATIONS.

D) PUMPER CONNECTION MUST BE INSTALLED ON OPPOSITE SIDE OF DETECTOR CHECK METER ASSEMBLY AND DOWNSTREAM OF THE OUTLET VALVE.

E) METER MUST BE PURCHASED FROM GCWW AND INSTALLED BY CONTRACTOR.

F) BLOCKING MUST BE UNDER VALVES.

G) A FACTORY DRILLED 1 ¾" HOLE MUST BE DRILLED IN THE BILCO LID IF THE PIT IS LOCATED IN AN UNPAVED AREA.

H) LID SHALL BE LOCATED IN CORNER ON THE SAME SIDE AS METER.

GREATER CINCINNATI WATER WORKS 12/23/03

OUTSIDE AMR DOUBLE CHECK DETECTOR CHECK VALVE SETTING

GREATER CINCINNATI WATER WORKS
COMMERCIAL SERVICES DIVISION

APPROVED	DATE	STANDARD DRAWING
	5-12-06	108-8C

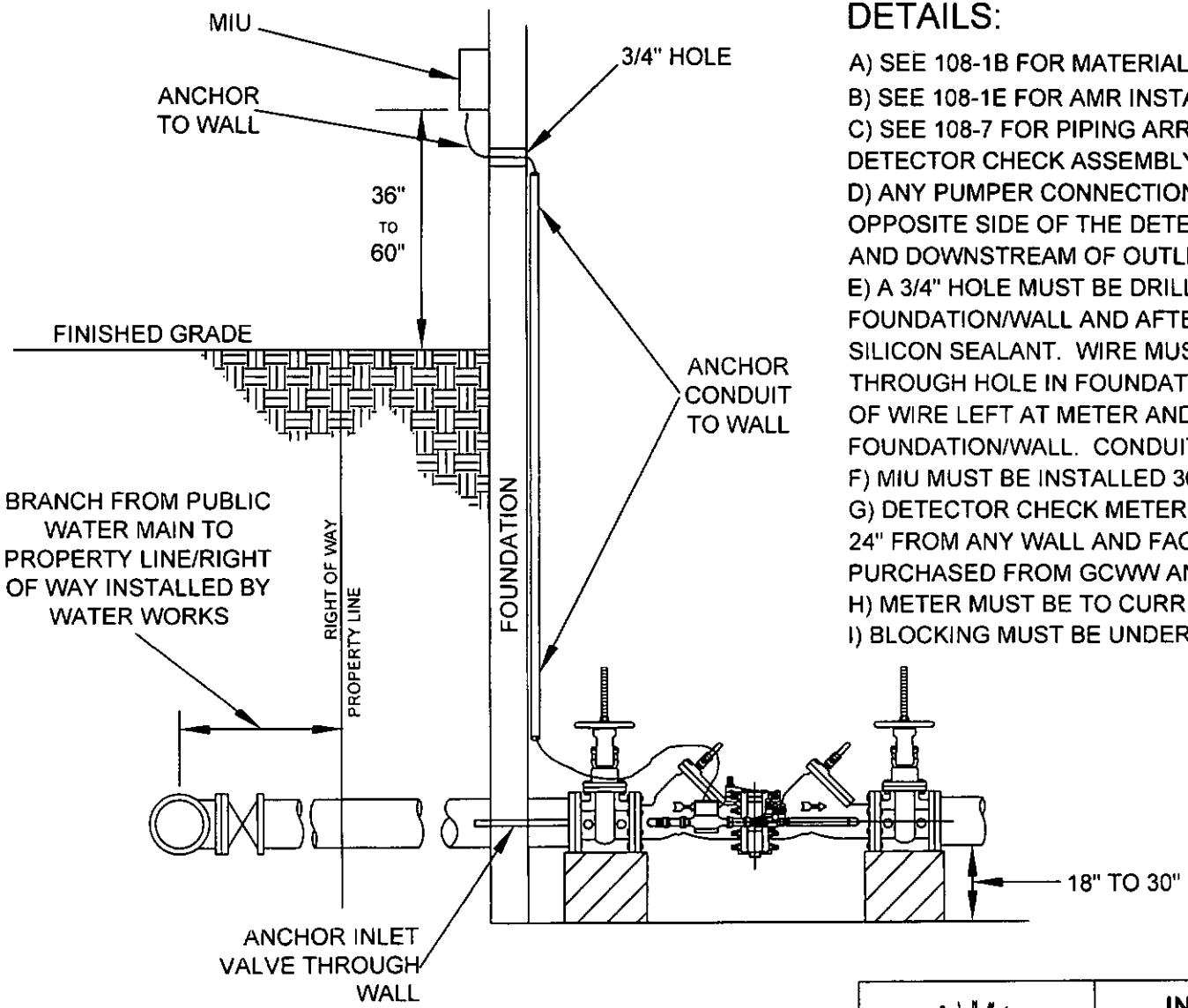

DETAILS:

A) SEE 108-1B FOR MATERIAL & CONSTRUCTION SPECIFICATIONS.
B) SEE 108-1E FOR AMR INSTALLATION DETAILS.
C) SEE 108-7 FOR PIPING ARRANGEMENTS FOR DOUBLE CHECK DETECTOR CHECK ASSEMBLY.
D) ANY PUMPER CONNECTION MUST BE INSTALLED ON THE OPPOSITE SIDE OF THE DETECTOR CHECK METER ASSEMBLY AND DOWNSTREAM OF OUTLET VALVE.
E) A 3/4" HOLE MUST BE DRILLED THROUGH BUILDING FOUNDATION/WALL AND AFTER RUNNING WIRE, FILLED WITH SILICON SEALANT. WIRE MUST BE RUN THROUGH 3/4" CONDUIT THROUGH HOLE IN FOUNDATION/WALL. THERE MUST BE 1 FOOT OF WIRE LEFT AT METER AND THROUGH HOLE IN FOUNDATION/WALL. CONDUIT SHALL BE ANCHORED TO WALL.
F) MIU MUST BE INSTALLED 36" TO 60" ABOVE FINISHED GRADE.
G) DETECTOR CHECK METER MUST BE INSTALLED A MINIMUM OF 24" FROM ANY WALL AND FACING INTO THE ROOM. METER TO BE PURCHASED FROM GCWW AND INSTALLED BY CONTRACTOR.
H) METER MUST BE TO CURRENT GCWW SPECIFICATIONS.
I) BLOCKING MUST BE UNDER VALVES.

GREATER CINCINNATI WATER WORKS 12/23/03

INSIDE EMR REDUCED PRESSURE DETECTOR CHECK VALVE SETTING

GREATER CINCINNATI WATER WORKS
COMMERCIAL SERVICES DIVISION

APPROVED	DATE	STANDARD DRAWING
	5-12-06	108-8D

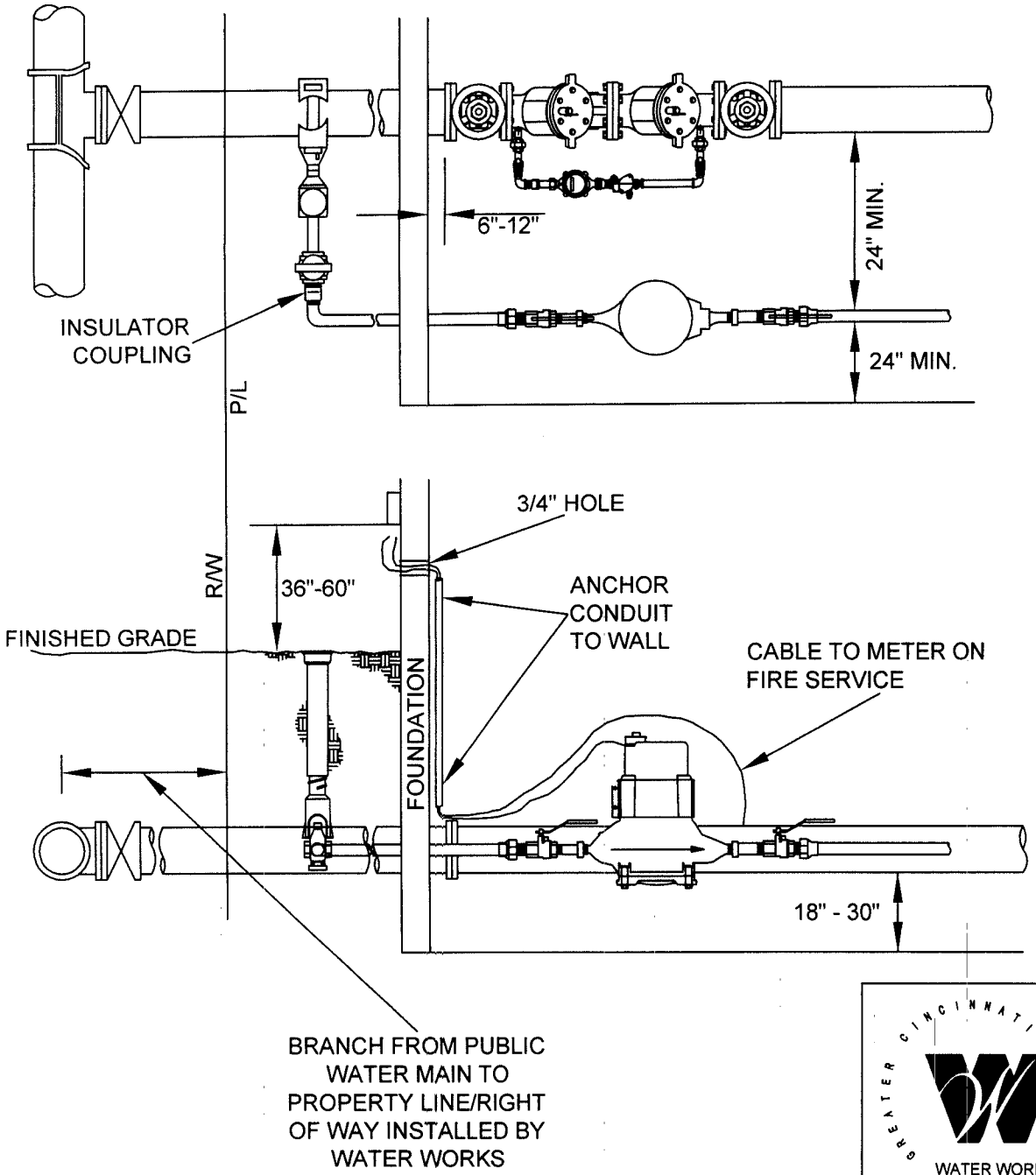

DETAILS:

A) SEE 108-1B FOR MATERIAL AND CONSTRUCTION SPECIFICATIONS AND 108-1E FOR AMR SPECIFICATIONS.
B) SEE 108-3A FOR INSIDE METER SETTING DETAILS.
C) SEE 108-7 DETAILS PIPING ARRANGEMENT ON DETECTOR CHECK VALVE ASSEMBLY.
D) AN INSULATOR COUPLING MUST BE INSTALLED ON THE HOUSE SIDE OF THE CURB STOP.
E) 24" MINIMUM CLEARANCE SHALL BE MAINTAINED BETWEEN DOMESTIC METER AND DETECTOR CHECK VALVE ASSEMBLY AND A MINIMUM OF 24" FROM ANY WALL. METER TO BE PURCHASED FROM GCWW AND INSTALLED BY CONTRACTOR.
F) ANY PUMPER CONNECTION MUST BE INSTALLED ON OPPOSITE SIDE OF DETECTOR CHECK METER ASSEMBLY AND DOWNSTREAM OF OUTLET VALVE.
G) BLOCKING MUST BE UNDER OS & Y VALVES.
H) A 3/4" HOLE MUST BE DRILLED THROUGH BUILDING FOUNDATION/WALL AND AFTER RUNNING WIRE, FILLED WITH SILICON SEALANT. WIRE MUST BE RUN THROUGH 3/4" CONDUIT THROUGH HOLE IN FOUNDATION/WALL. THERE MUST BE 1 FOOT OF WIRE LEFT AT METER AND THROUGH HOLE IN FOUNDATION/WALL. CONDUIT SHALL BE ANCHORED TO WALL.

GREATER CINCINNATI WATER WORKS 12/23/03	**INSIDE AMR DUAL SERVICE SETTING** FOR 3/4" & 1" DOMESTIC METER		
	GREATER CINCINNATI WATER WORKS COMMERCIAL SERVICES DIVISION		
	APPROVED	DATE 09/18/06	STANDARD DRAWING 108-9

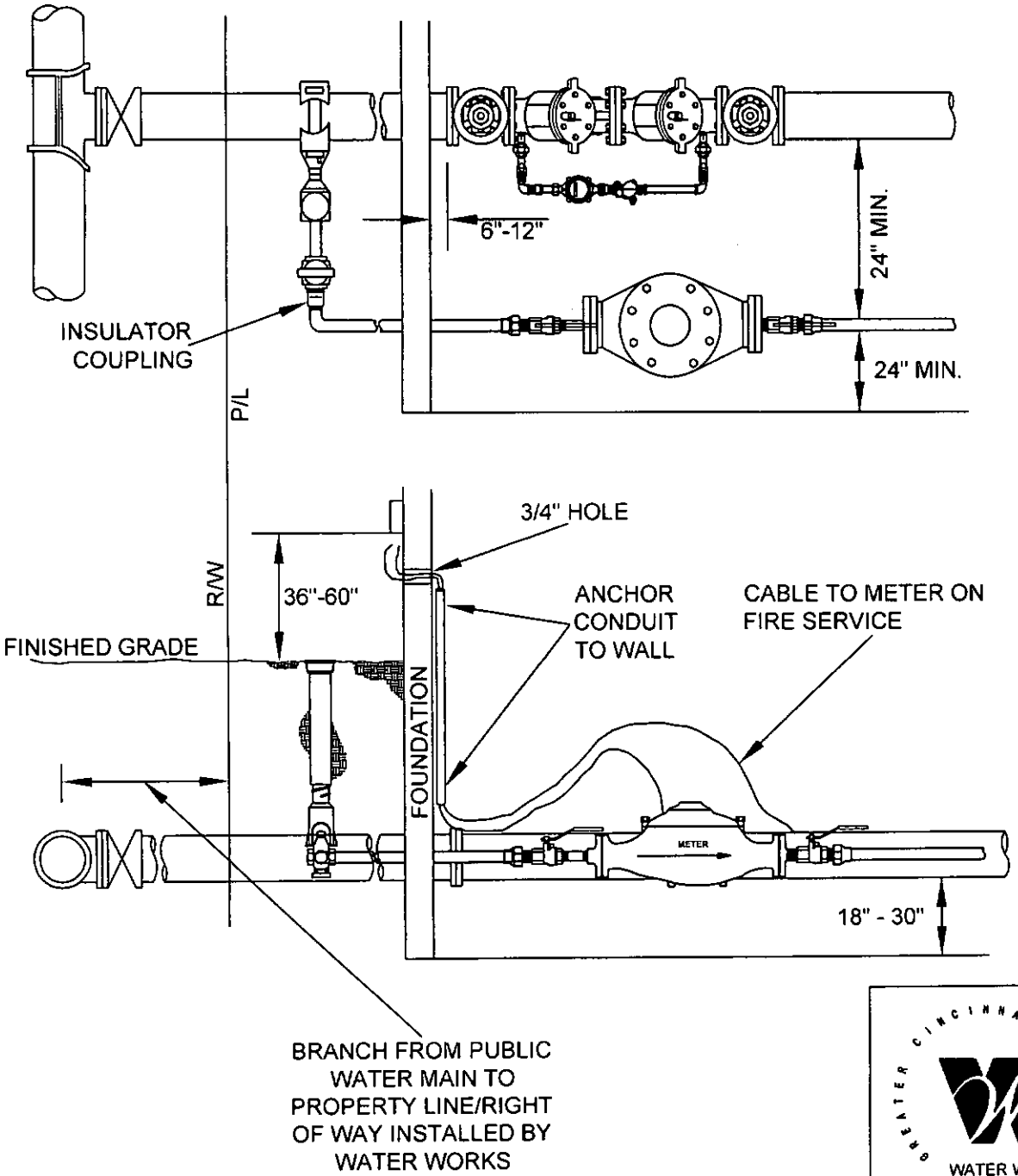

DETAILS:

A) SEE 108-1B FOR MATERIAL AND CONSTRUCTION SPECIFICATIONS AND 108-1E FOR AMR SPECIFICATIONS.
B) SEE 108-3B FOR INSIDE METER SETTING DETAILS.
C) SEE 108-7 FOR PIPING ARRANGEMENT ON DETECTOR CHECK VALVE ASSEMBLY.
D) AN INSULATOR COUPLING MUST BE INSTALLED ON THE HOUSE SIDE OF THE CURB STOP.
E) 24" MINIMUM CLEARANCE SHALL BE MAINTAINED BETWEEN DOMESTIC METER AND DETECTOR CHECK VALVE ASSEMBLY AND A MINIMUM OF 24" FROM ANY WALL. METER TO BE PURCHASED FROM GCWW AND INSTALLED BY CONTRACTOR.
F) ANY PUMPER CONNECTION MUST BE INSTALLED ON OPPOSITE SIDE OF DETECTOR CHECK METER ASSEMBLY AND DOWNSTREAM OF OUTLET VALVE.
G) A ROADWAY BOX MUST BE INSTALLED OVER DOMESTIC CORPORATION STOP.
H) BLOCKING MUST BE UNDER OS & Y VALVES.
I) A 3/4" HOLE MUST BE DRILLED THROUGH BUILDING FOUNDATION/WALL AND AFTER RUNNING WIRE, FILLED WITH SILICON SEALANT. WIRE MUST BE RUN THROUGH 3/4" CONDUIT THROUGH HOLE IN FOUNDATION/WALL. THERE MUST BE 1 FOOT OF WIRE LEFT AT METER AND THROUGH HOLE IN FOUNDATION/WALL. CONDUIT SHALL BE ANCHORED TO WALL.

GREATER CINCINNATI WATER WORKS 12/10/03	**INSIDE AMR DUAL SERVICE SETTING** FOR 1 1/2" & 2" DOMESTIC METER		
	GREATER CINCINNATI WATER WORKS COMMERCIAL SERVICES DIVISION		
	APPROVED	DATE 5-12-06	STANDARD DRAWING 108-9A

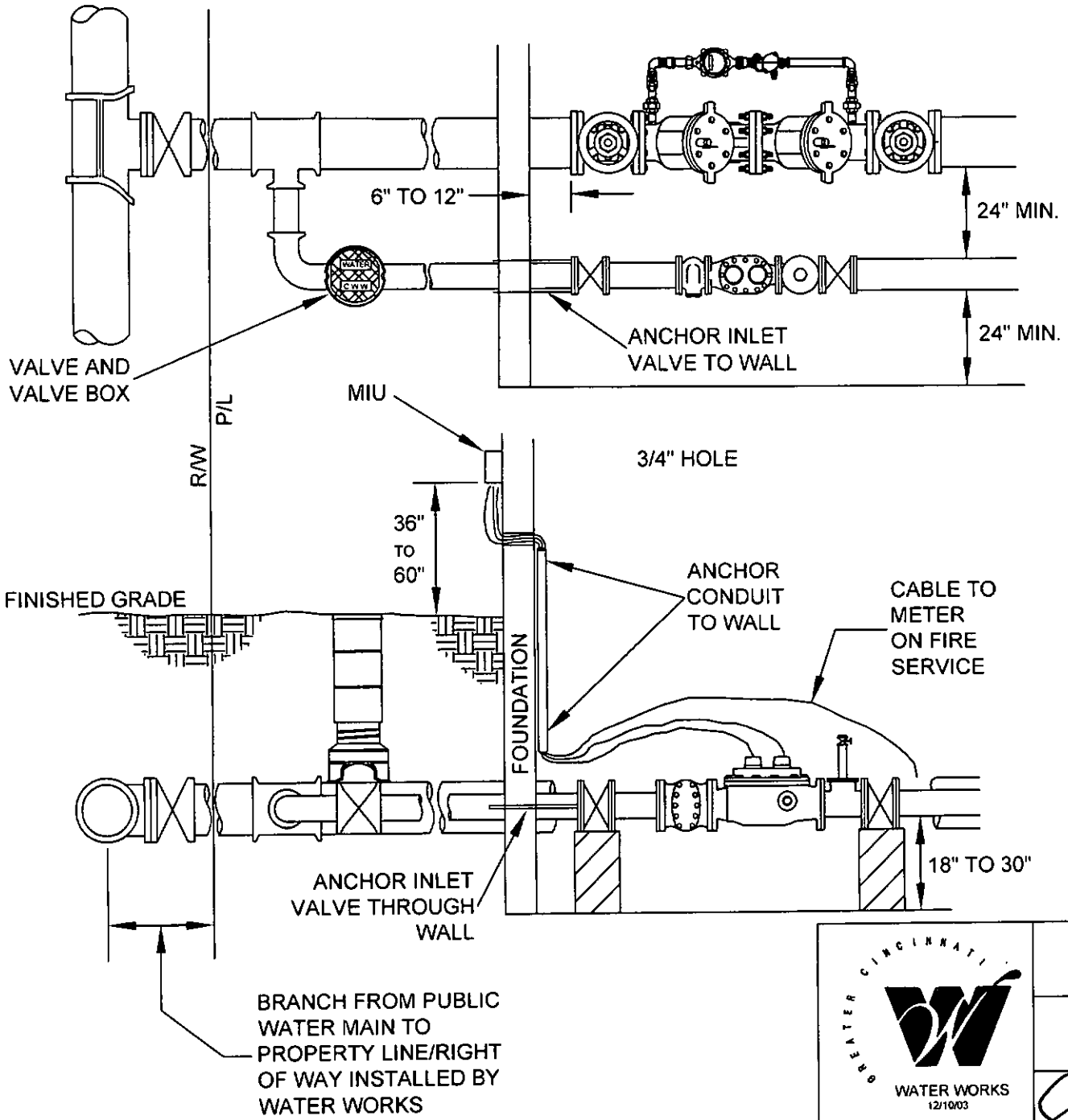

DETAILS:

A) SEE 108-1B FOR MATERIAL AND CONSTRUCTION SPECIFICATIONS AND 108-1E FOR AMR SPECIFICATIONS.
B) SEE 108-6 FOR PIPING ARRANGEMENT ON DOMESTIC METER.
C) SEE 108-7 FOR PIPING ARRANGEMENT ON DETECTOR CHECK VALVE ASSEMBLY.
D) 24" MINIMUM CLEARANCE SHALL BE MAINTAINED BETWEEN DOMESTIC METER AND DOUBLE DETECTOR CHECK VALVE ASSEMBLY AND A MINIMUM OF 24" FROM ANY WALL. DC METER SHALL BE INSTALLED ON THE SIDE OPPOSITE OF THE DOMESTIC METER. METER TO BE PURCHASED FROM GCWW AND INSTALLED BY CONTRACTOR.
E) ANY PUMPER CONNECTION MUST BE INSTALLED ON OPPOSITE SIDE OF DOUBLE DETECTOR CHECK METER ASSEMBLY AND DOWNSTREAM OF OUTLET VALVE.
F) A VALVE BOX COMPLETE MUST BE INSTALLED ON THE DOMESTIC BRANCH.
G) BLOCKING MUST BE UNDER OS & Y VALVES.
H) A 3/4" HOLE MUST BE DRILLED THROUGH BUILDING FOUNDATION/WALL AND AFTER RUNNING WIRE, FILLED WITH SILICON SEALANT. WIRE MUST BE RUN THROUGH 3/4" CONDUIT THROUGH HOLE IN FOUNDATION/WALL. THERE MUST BE 1 FOOT OF WIRE LEFT AT METER AND THROUGH HOLE IN FOUNDATION/WALL. CONDUIT SHALL BE ANCHORED TO WALL.

GREATER CINCINNATI WATER WORKS
12/10/03

INSIDE AMR DUAL SERVICE SETTING
FOR 3" OR LARGER DOMESTIC METER

GREATER CINCINNATI WATER WORKS
COMMERCIAL SERVICES DIVISION

APPROVED	DATE	STANDARD DRAWING
	5-12-06	108-10

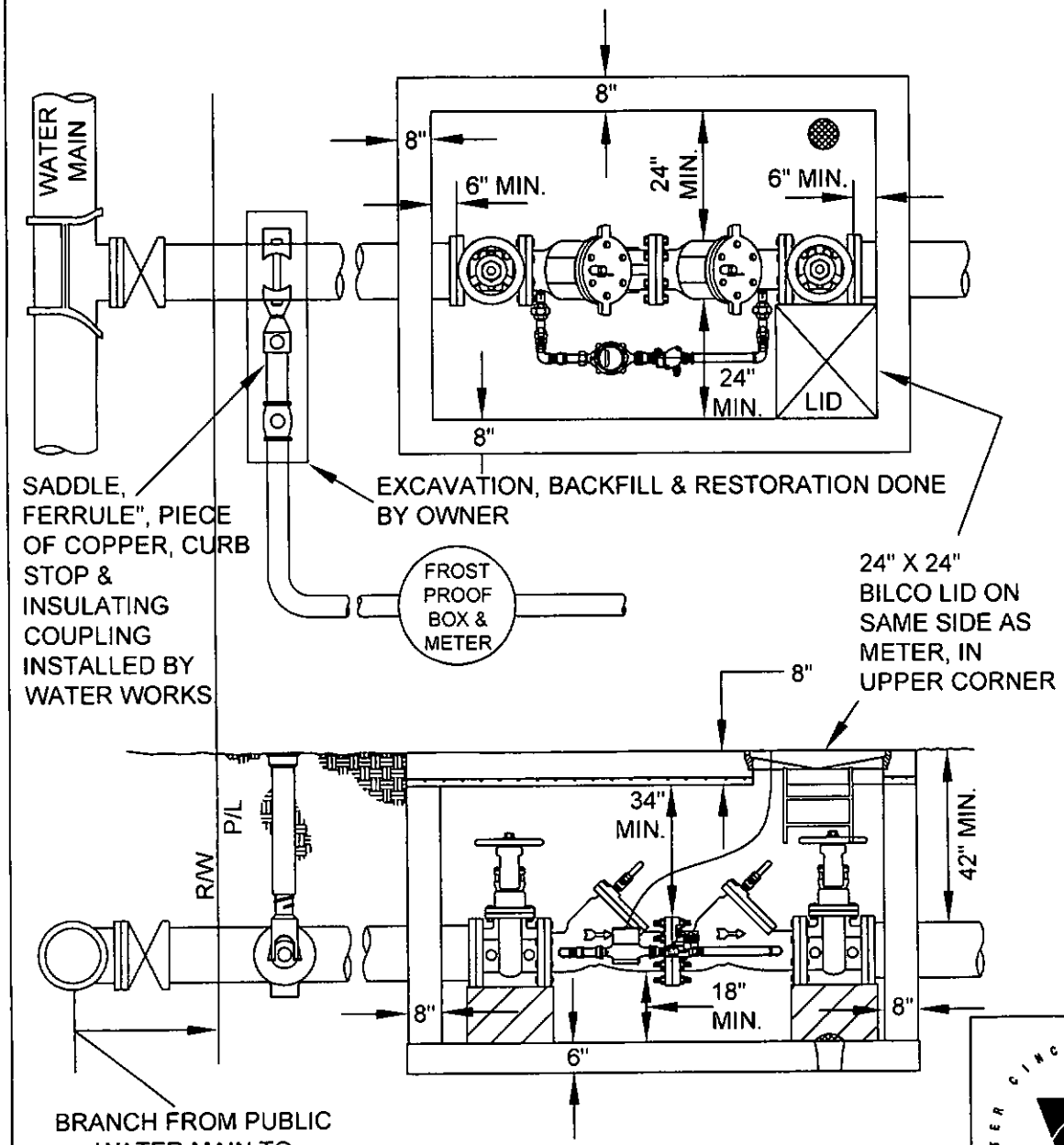

DETAILS:

A) SEE 108-1, 108-1A, 108-1B & 108-1C FOR MATERIAL & CONSTRUCTION SPECIFICATIONS.
B) SEE 108-1E FOR AMR INSTALLATION SPECIFICATIONS.
C) SEE 108-5 FOR 5/8" AND 3/4" METER SETTINGS; 108-5A FOR 1" METER SETTINGS; 108-5B FOR 1 1/2" AND 2" METER SETTING SPECIFICATIONS.
D) SEE 108-7 FOR DETAILS PIPING ARRANGEMENT FOR DOUBLE CHECK DETECTOR CHECK VALVE ASSEMBLY.
E) A CURB BOX MUST BE INSTALLED ON A 3/4" AND 1" DOMESTIC BRANCH AND A TELESCOPE BOX MUST BE INSTALLED ON A 1 1/2" AND 2" DOMESTIC BRANCH.
F) ANY PUMPER CONNECTION MUST BE INSTALLED ON OPPOSITE SIDE OF DOUBLE DETECTOR CHECK METER ASSEMBLY AND DOWNSTREAM OF OUTLET VALVE.
G) BLOCKING MUST BE UNDER OS & Y VALVES.
H) A FACTORY DRILLED 1-3/4" HOLE MUST BE DRILLED IN THE BILCO LID IF THE PIT IS LOCATED IN AN UNPAVED AREA.

GREATER CINCINNATI WATER WORKS 12/23/03

OUTSIDE AMR DUAL SERVICE SETTING
FOR 2" AND SMALLER DOMESTIC METERS

GREATER CINCINNATI WATER WORKS
COMMERCIAL SERVICES DIVISION

APPROVED	DATE	STANDARD DRAWING
	5-12-06	108-11

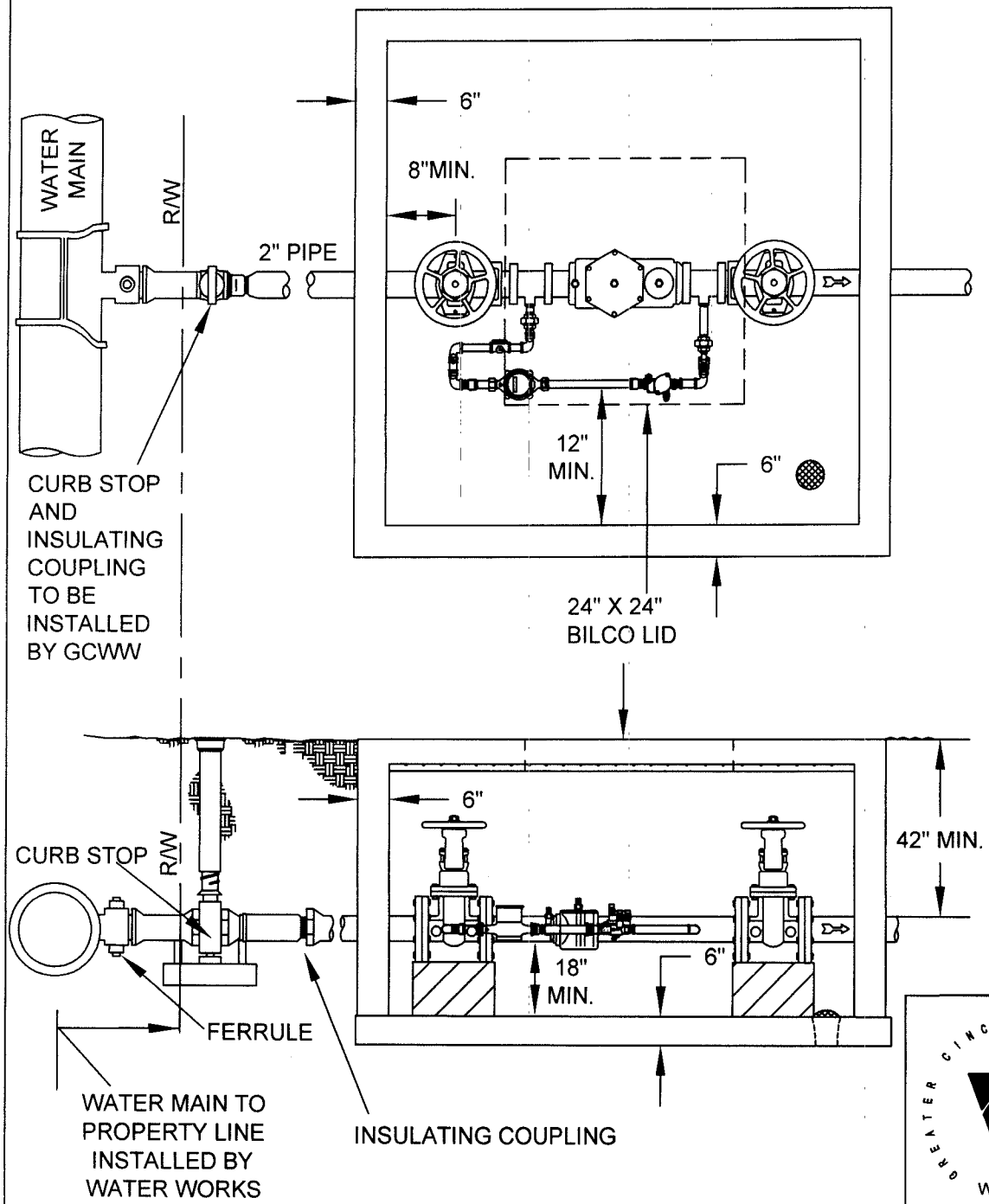

DETAILS:

A) PIT MUST BE KOI CONCRETE PRODUCTS 5 X 5 X 5 CATCH BASIN (OR APPROVED EQUAL) WITH ACCOMPANYING FLOOR. SEE 108-1, 1A, 1B & 1C FOR TOP SLAB, MATERIAL AND CONSTRUCTION SPECIFICATIONS. MUST INCLUDE APPROVED LADDER.

B) SEE 108-7A FOR DCDA PIPING ARRANGEMENT DETAILS.

C) A ROADWAY BOX MUST BE INSTALLED ON THE CURB STOP.

D) ANY PUMPER CONNECTION MUST BE INSTALLED DOWNSTREAM OF OUTLET VALVE AND OUTSIDE OF THE METER PIT.

E) BLOCKING MUST BE UNDER OS & Y VALVES.

F) DETECTOR CHECK METER MUST BE A MINIMUM OF 18" FROM THE FLOOR.

G) CURB STOP AND INSULATOR COUPLING TO BE INSTALLED BY GCWW.

GREATER CINCINNATI WATER WORKS
12/23/03

OUTSIDE AMR SERVICE SETTING
FOR 2" OR SMALLER
DOUBLE CHECK DETECTOR CHECK ASSEMBLY

GREATER CINCINNATI WATER WORKS
COMMERCIAL SERVICES DIVISION

APPROVED	DATE	STANDARD DRAWING
	09/18/06	108-11A

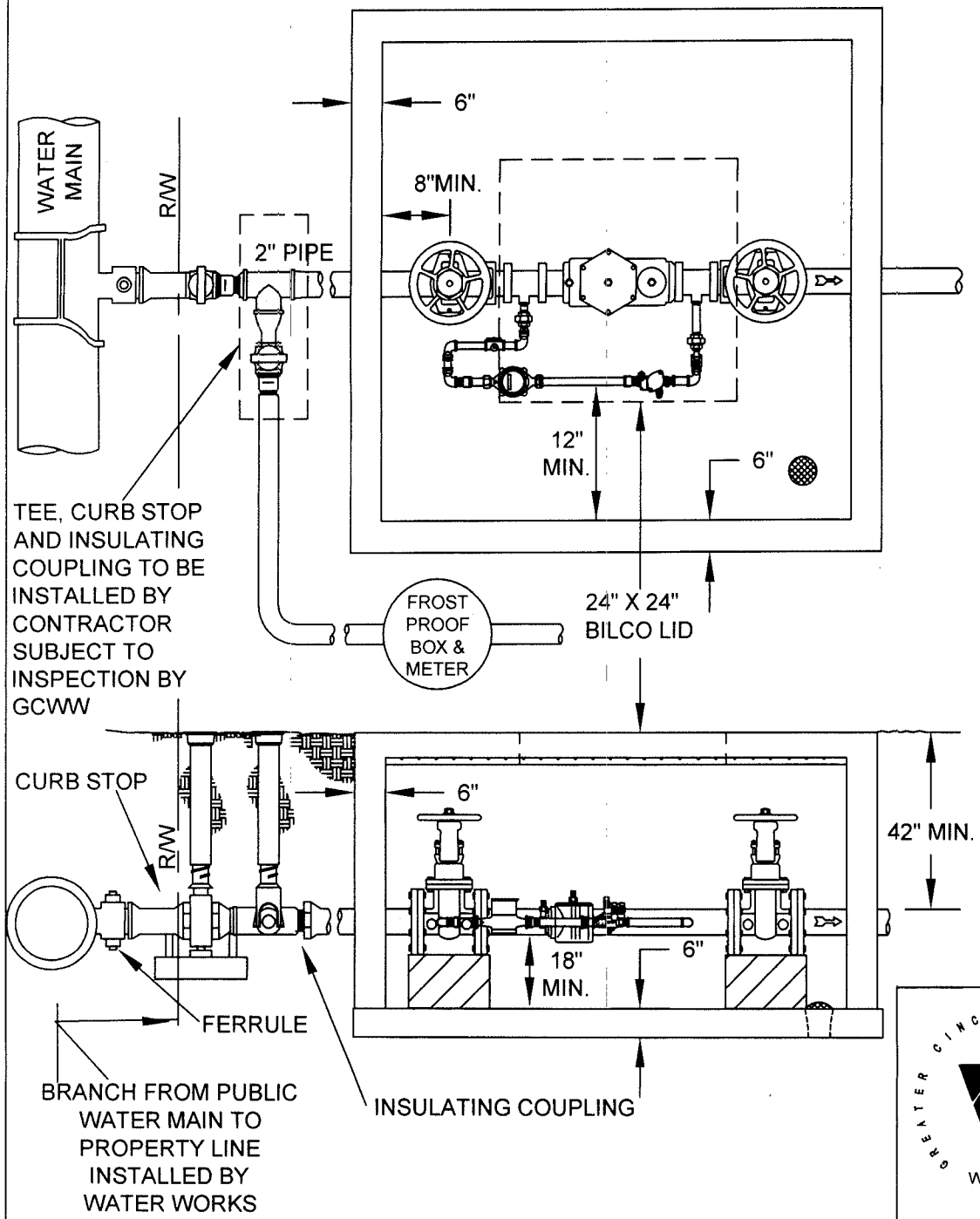

DETAILS:

A) PIT MUST BE KOI CONCRETE PRODUCTS 5 X 5 X 5 CATCH BASIN (OR APPROVED EQUAL) WITH ACCOMPANYING FLOOR. SEE 108-1, 1A, 1B & 1C FOR TOP SLAB, MATERIAL AND CONSTRUCTION SPECIFICATIONS.

B) SEE 108-5,5A & 5B FOR DOMESTIC METER SETTING SPECIFICATIONS AND 108-7A FOR DCDA PIPING ARRANGEMENT DETAILS.

C) A CURB BOX MUST BE INSTALLED ON $\frac{3}{4}$" AND 1" BRANCHES AND A ROADWAY BOX MUST BE INSTALLED ON 1.5" AND 2" BRANCHES.

D) ANY PUMPER CONNECTION MUST BE INSTALLED DOWNSTREAM OF OUTLET VALVE AND OUTSIDE OF THE METER PIT.

E) BLOCKING MUST BE UNDER OS & Y VALVES.

F) DETECTOR CHECK METER MUST BE A MINIMUM OF 12" FROM THE SIDE WALL AND 18" FROM THE FLOOR.

G) CURB STOP AND INSULATING COUPLING TO BE INSTALLED BY GCWW. FLARED OR SILVER SOLDERED TEE AND DOMESTIC CURB STOP TO BE INSTALLED BY CONTRACTOR.

GREATER CINCINNATI WATER WORKS
12/23/03

OUTSIDE AMR DUAL SERVICE SETTING FOR 2" OR SMALLER DOUBLE CHECK DETECTOR CHECK ASSEMBLY

GREATER CINCINNATI WATER WORKS
COMMERCIAL SERVICES DIVISION

APPROVED	DATE	STANDARD DRAWING
	09/18/06	108-11B

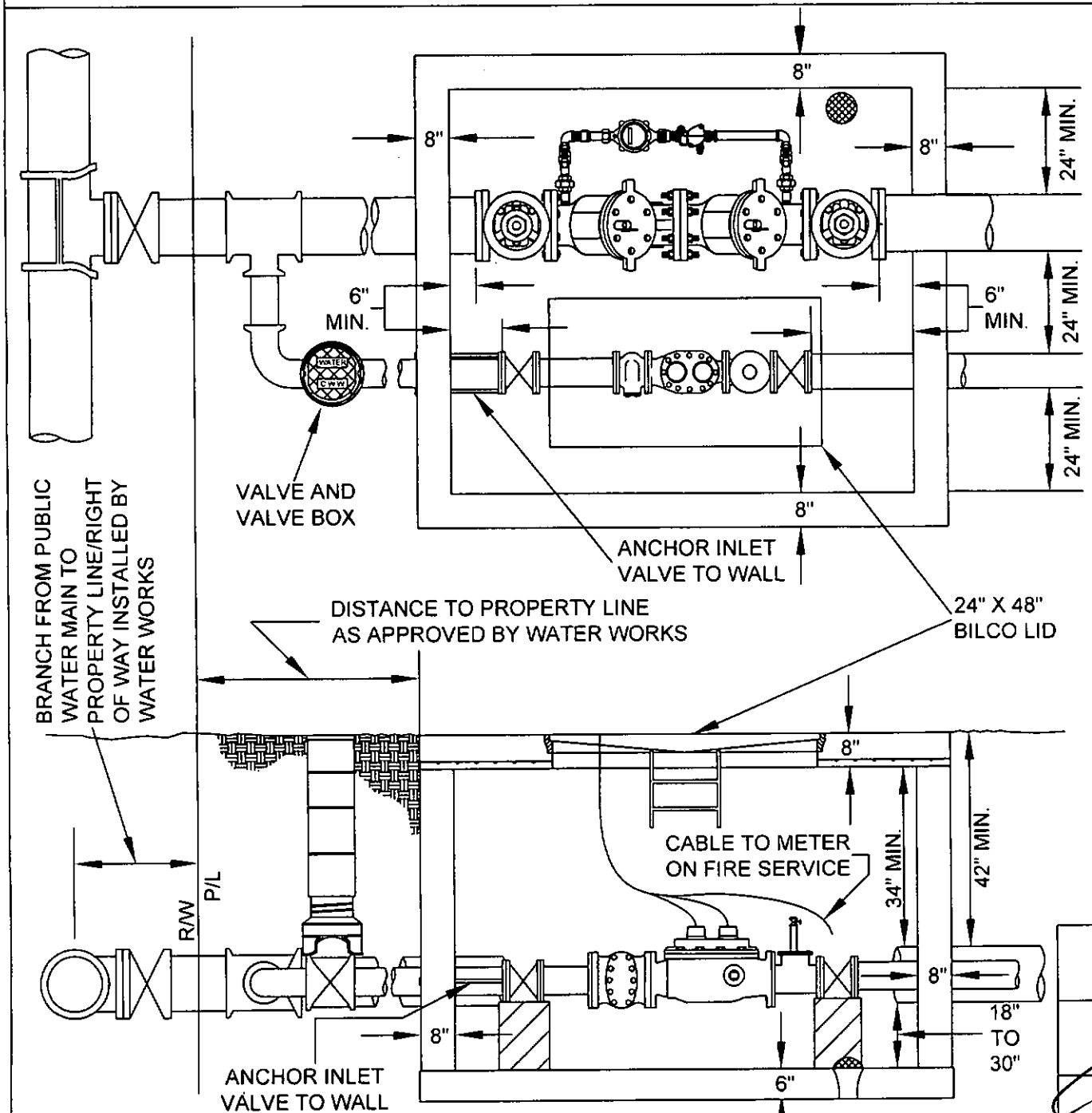

DETAILS:

A) SEE 108-1, 1B & 1C FOR MATERIAL AND CONSTRUCTION SPECIFICATIONS AND 108-1E FOR AMR SPECIFICATIONS.

B) SEE 108-6 FOR PIPING ARRANGEMENT ON DOMESTIC METER.

C) SEE 108-7 FOR PIPING ARRANGEMENT ON DETECTOR CHECK VALVE ASSEMBLY.

D) 24" MINIMUM CLEARANCE SHALL BE MAINTAINED BETWEEN METER AND DOUBLE DETECTOR CHECK VALVE ASSEMBLY AND A MINIMUM OF 24" FROM ANY WALL. DC METER MUST BE INSTALLED ON THE SIDE OPPOSITE FROM DOMESTIC METER.

E) ANY PUMPER CONNECTION MUST BE INSTALLED ON OPPOSITE SIDE OF DOUBLE DETECTOR CHECK ASSEMBLY AND DOWNSTREAM OF OUTLET VALVE.

F) A VALVE BOX MUST INSTALLED ON THE DOMESTIC BRANCH.

G) BLOCKING MUST BE UNDER VALVES.

H) A FACTORY DRILLED 1 ¾" HOLE MUST BE DRILLED IN THE BILCO LID IF THE PIT IS LOCATED IN AN UNPAVED AREA.

I) LID MUST BE CENTERED LENGTHWISE OVER THE DOMESTIC METER.

GREATER CINCINNATI WATER WORKS
12/23/03

OUTSIDE AMR DUAL SERVICE SETTING
FOR 3" AND LARGER METERS

GREATER CINCINNATI WATER WORKS
COMMERCIAL SERVICES DIVISION

APPROVED	DATE	STANDARD DRAWING
	5-12-06	108-12

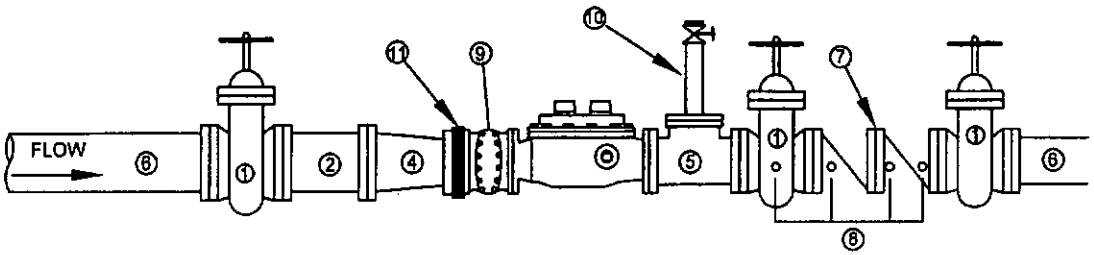

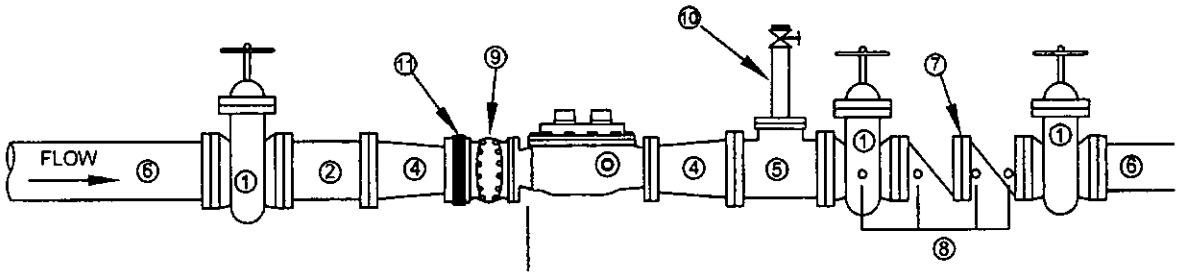

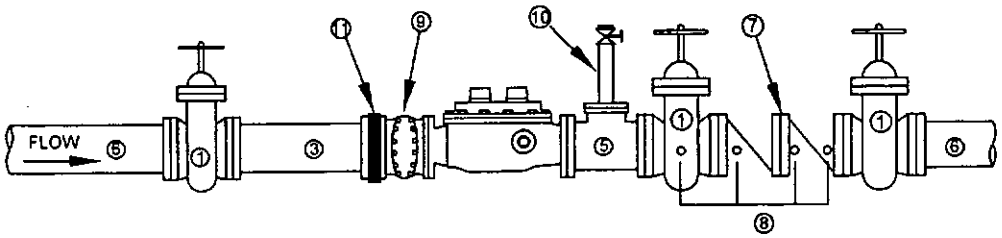

1) FLANGED GATE VALVE WITH WHEEL OPERATOR
2) FLANGED SPOOL 6" LONG WITH 1/2" TAPPED OUTLET
3) FLANGED SPOOL 12" LONG WITH 1/2" TAPPED OUTLET
4) FLANGED REDUCING SPOOL
5) FLANGED TEST TEE
6) FLANGED BY PLAIN END ADAPTER 3' OR 6' LONG
7) BACKFLOW PREVENTER (NO SMALLER THAN METER SIZE)
8) TEST COCKS
9) STRAINER
10) TEST TEE
11) SPACER

DETAILS:

A) TEST COCKS SHALL BE LOCATED AS FOLLOWS: a) INLET SIDE OF GATE VALVE IMMEDIATELY UPSTREAM OF BACKFLOW PREVENTER b) INLET SIDE OF UPSTREAM CHECK VALVE c) OUTLET SIDE OF DOWNSTREAM CHECK VALVE.

B) TEST COCK SIZES SHALL BE AS FOLLOWS: a) 1/4" FOR BACKFLOW PREVENTERS 2" AND SMALLER b) 1/2" FOR 3" AND 4" BACKFLOW PREVENTERS c) 3/4" FOR BACKFLOW PREVENTERS 6" AND LARGER.

C) IF A POST INDICATOR IS USED ON ANY VALVE WITHIN THE PIT, IT MUST BE A TYPE THAT WILL ATTACH TO THE WHEEL OPERATOR AND ALLOW OPERATION OF THE VALVE FROM INSIDE THE PIT, WHEN THE LOCK IS REMOVED.

D) SEE 108-6 FOR PIPING ARRANGEMENT OF DOMESTIC METERS 3" OR LARGER.

E) THAT PORTION OF THE SERVICE PIPING BETWEEN THE METER SETTING AND THE BACKFLOW PREVENTER SHALL BE VOID OF BRANCHES OR OUTLETS OF ANY KIND.

GREATER CINCINNATI WATER WORKS 12/23/03

PIPING ARRANGEMENT FOR DOMESTIC METERS 3" OR LARGER WITH BACKFLOW PREVENTER

GREATER CINCINNATI WATER WORKS
COMMERCIAL SERVICES DIVISION

APPROVED	DATE	STANDARD DRAWING
Paul Jones	1/1/04	108-13

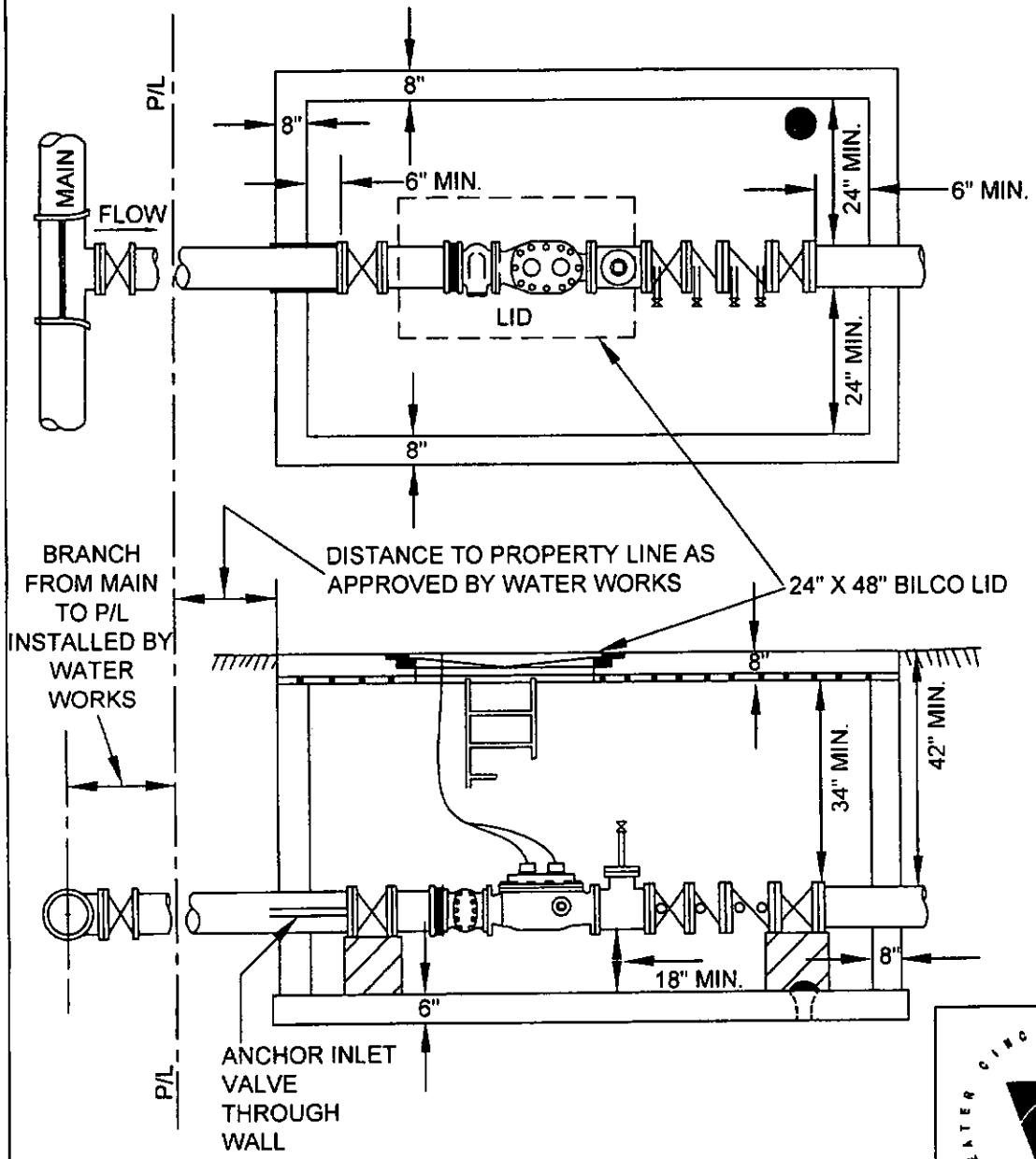

DETAILS:

A) LID MUST BE CENTERED LENGTHWISE OVER THE METER.

B) SEE 108-1, 1B & 1C FOR MATERIAL AND CONSTRUCTION SPECIFICATIONS AND 108-1E FOR AMR SPECIFICATIONS.

C) SEE 108-6 FOR PIPING ARRANGEMENT ON DOMESTIC METER.

D) REMOVABLE METAL LADDER TO REACH FROM PIT FLOOR TO PIT OPENING.

E) BACKFLOW PREVENTER SHALL BE NO SMALLER THAN METER SIZE.

F) A FACTORY DRILLED 1 ¾" HOLE MUST BE DRILLED IN THE BILCO LID IF THE PIT IS LOCATED IN AN UNPAVED AREA.

GREATER CINCINNATI WATER WORKS 12/23/03	**PIT-METER 3" OR LARGER WITH DOUBLE CHECK BACKFLOW PREVENTER**		
	GREATER CINCINNATI WATER WORKS COMMERCIAL SERVICES DIVISION		
	APPROVED Paul Tarna	DATE 1/1/04	STANDARD DRAWING 108-14

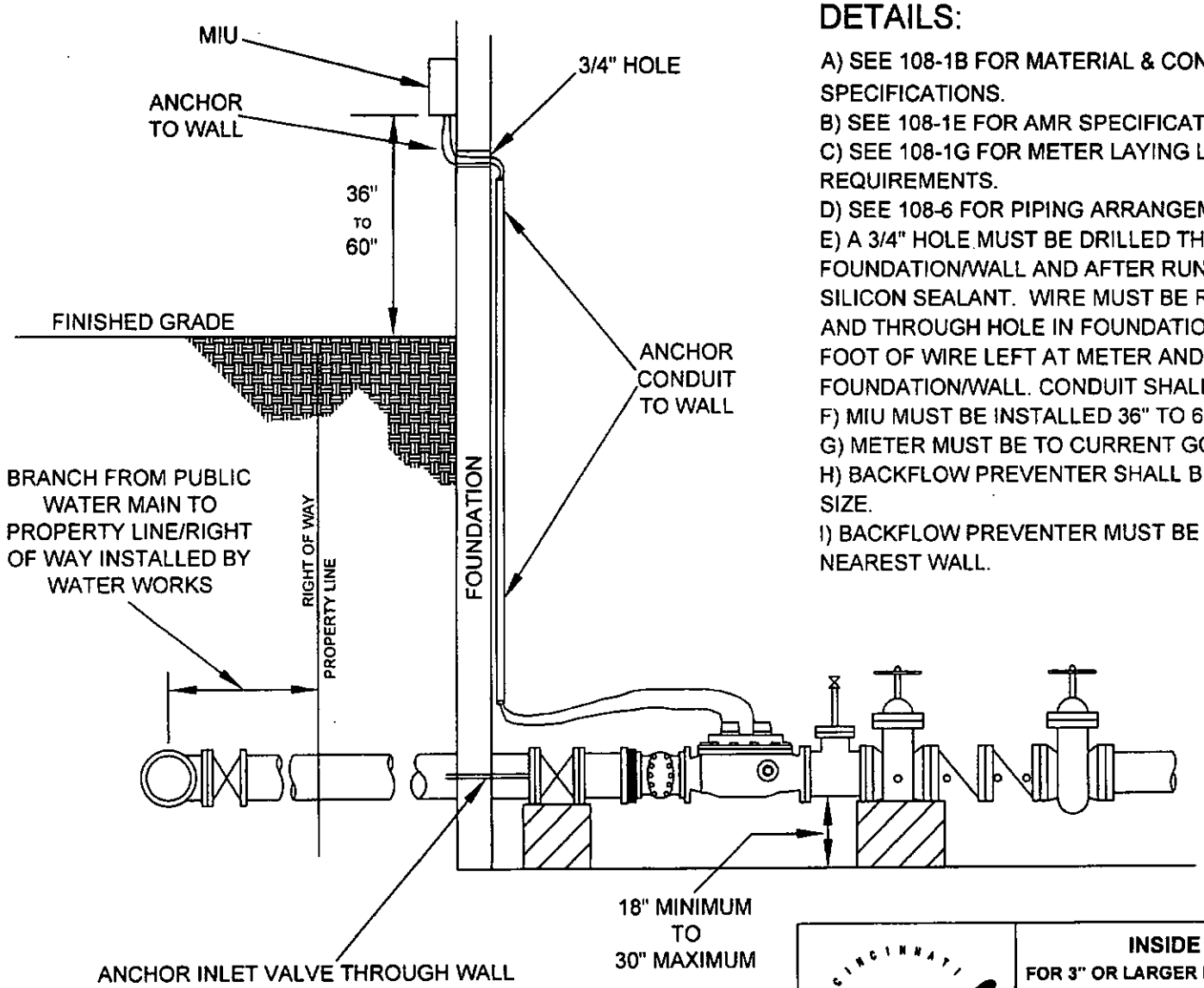

DETAILS:

A) SEE 108-1B FOR MATERIAL & CONSTRUCTION SPECIFICATIONS.
B) SEE 108-1E FOR AMR SPECIFICATIONS.
C) SEE 108-1G FOR METER LAYING LENGTH SPACE REQUIREMENTS.
D) SEE 108-6 FOR PIPING ARRANGEMENTS.
E) A 3/4" HOLE MUST BE DRILLED THROUGH BUILDING FOUNDATION/WALL AND AFTER RUNNING WIRE, FILLED WITH SILICON SEALANT. WIRE MUST BE RUN THROUGH 3/4" CONDUIT AND THROUGH HOLE IN FOUNDATION/WALL. THERE MUST BE 1 FOOT OF WIRE LEFT AT METER AND THROUGH HOLE IN FOUNDATION/WALL. CONDUIT SHALL BE ANCHORED TO WALL.
F) MIU MUST BE INSTALLED 36" TO 60" ABOVE FINISHED GRADE.
G) METER MUST BE TO CURRENT GCWW SPECIFICATIONS.
H) BACKFLOW PREVENTER SHALL BE NO SMALLER THAN METER SIZE.
I) BACKFLOW PREVENTER MUST BE AT LEAST 24" AWAY FROM NEAREST WALL.

GREATER CINCINNATI WATER WORKS 12/23/03	**INSIDE EMR METER SETTING** FOR 3" OR LARGER METERS WITH BACKFLOW PREVENTER		
	GREATER CINCINNATI WATER WORKS COMMERCIAL SERVICES DIVISION		
	APPROVED Paul Tomes	DATE 1/1/04	STANDARD DRAWING 108-15

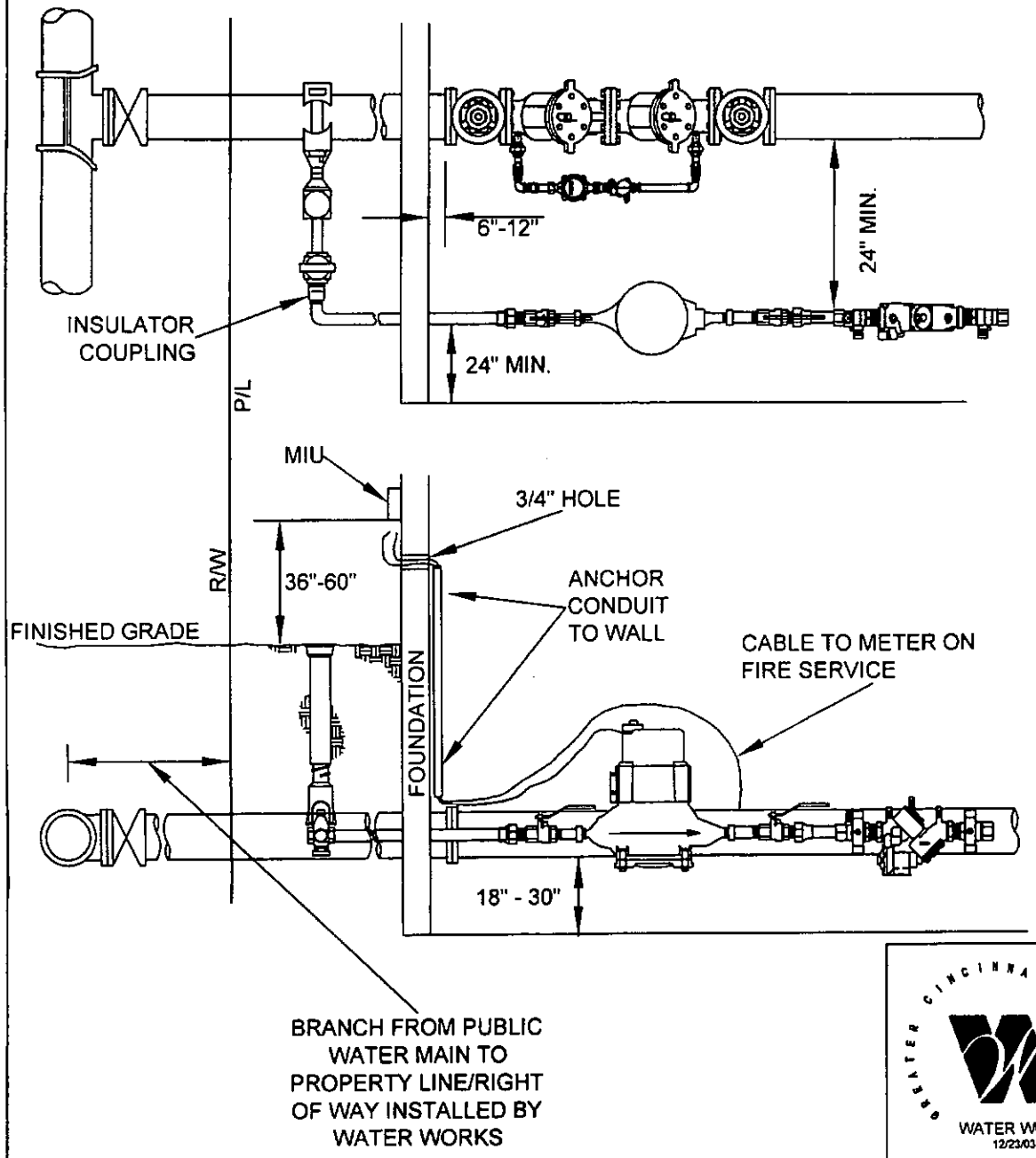

DETAILS:

A) SEE 108-1B FOR MATERIAL AND CONSTRUCTION SPECIFICATIONS AND 108-1E FOR AMR SPECIFICATIONS.
B) SEE 108-3A FOR INSIDE METER SETTING DETAILS.
C) SEE 108-7 PIPING ARRANGEMENT ON DETECTOR CHECK VALVE ASSEMBLY.
D) AN INSULATOR COUPLING MUST BE INSTALLED ON THE HOUSE SIDE OF THE CURB STOP.
E) 24" MINIMUM CLEARANCE SHALL BE MAINTAINED BETWEEN DOMESTIC METER AND DETECTOR CHECK VALVE ASSEMBLY AND A MINIMUM OF 24" FROM ANY WALL. METER TO BE PURCHASED FROM GCWW AND INSTALLED BY CONTRACTOR.
F) ANY PUMPER CONNECTION MUST BE INSTALLED ON OPPOSITE SIDE OF DETECTOR CHECK METER ASSEMBLY AND DOWNSTREAM OF OUTLET VALVE.
G) BLOCKING MUST BE UNDER OS & Y VALVES.
H) A 3/4" HOLE MUST BE DRILLED THROUGH BUILDING FOUNDATION/WALL AND AFTER RUNNING WIRE, FILLED WITH SILICON SEALANT. WIRE MUST BE RUN THROUGH 3/4" CONDUIT THROUGH HOLE IN FOUNDATION/WALL. THERE MUST BE 1 FOOT OF WIRE LEFT AT METER AND THROUGH HOLE IN FOUNDATION/WALL. CONDUIT SHALL BE ANCHORED TO WALL.

GREATER CINCINNATI WATER WORKS 12/23/03

INSIDE EMR DUAL SERVICE SETTING

FOR 3/4" & 1" DOMESTIC METER WITH BACKFLOW PREVENTER

GREATER CINCINNATI WATER WORKS
COMMERCIAL SERVICES DIVISION

APPROVED	DATE	STANDARD DRAWING
Paul Tomm	1/1/04	108-16

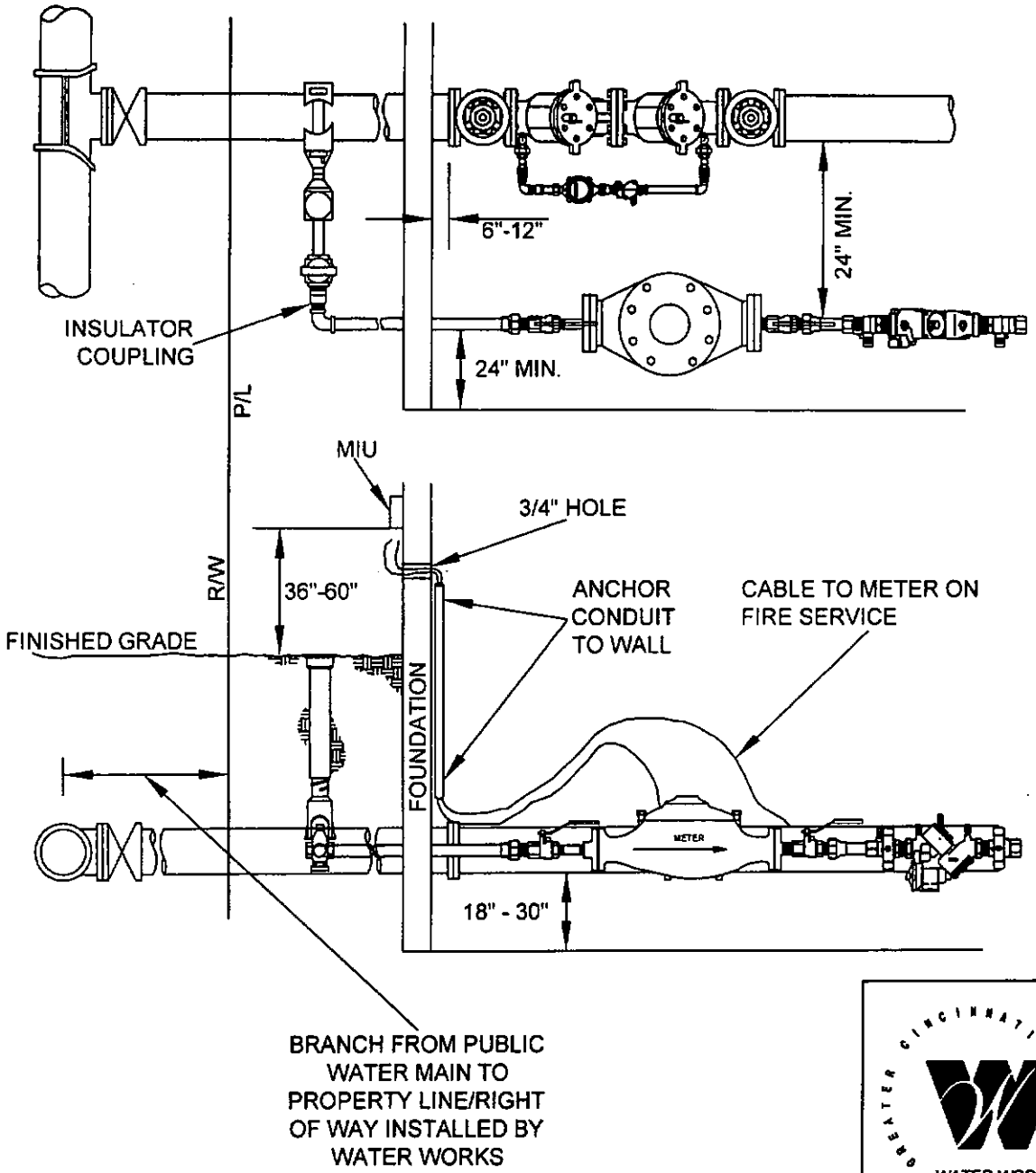

DETAILS:

A) SEE 108-1B FOR MATERIAL AND CONSTRUCTION SPECIFICATIONS.
B) SEE 108-3B FOR METER SETTING DETAILS.
C) SEE 108-7 FOR PIPING ARRANGEMENT ON DETECTOR CHECK VALVE ASSEMBLY.
D) AN INSULATOR COUPLING MUST BE INSTALLED ON THE HOUSE SIDE OF THE CURB STOP.
E) 24" MINIMUM CLEARANCE SHALL BE MAINTAINED BETWEEN DOMESTIC METER AND DETECTOR CHECK VALVE ASSEMBLY AND A MINIMUM OF 24" FROM ANY WALL. METER TO BE PURCHASED FROM GCWW AND INSTALLED BY CONTRACTOR.
F) ANY PUMPER CONNECTION MUST BE INSTALLED ON OPPOSITE SIDE OF DETECTOR CHECK METER ASSEMBLY AND DOWNSTREAM OF OUTLET VALVE.
G) A ROADWAY BOX MUST BE INSTALLED OVER DOMESTIC CORPORATION STOP.
H) BLOCKING MUST BE UNDER OS & Y VALVES.
I) A 3/4" HOLE MUST BE DRILLED THROUGH BUILDING FOUNDATION/WALL AND AFTER RUNNING WIRE, FILLED WITH SILICON SEALANT. WIRE MUST BE RUN THROUGH 3/4" CONDUIT THROUGH HOLE IN FOUNDATION/WALL. THERE MUST BE 1 FOOT OF WIRE LEFT AT METER AND THROUGH HOLE IN FOUNDATION/WALL. CONDUIT SHALL BE ANCHORED TO WALL.

GREATER CINCINNATI WATER WORKS 12/23/03

INSIDE EMR DUAL SERVICE SETTING
FOR 1 1/2" & 2" DOMESTIC METER WITH BACKFLOW PREVENTER

GREATER CINCINNATI WATER WORKS
COMMERCIAL SERVICES DIVISION

APPROVED	DATE	STANDARD DRAWING
Paul Tarna	1/1/04	108-17

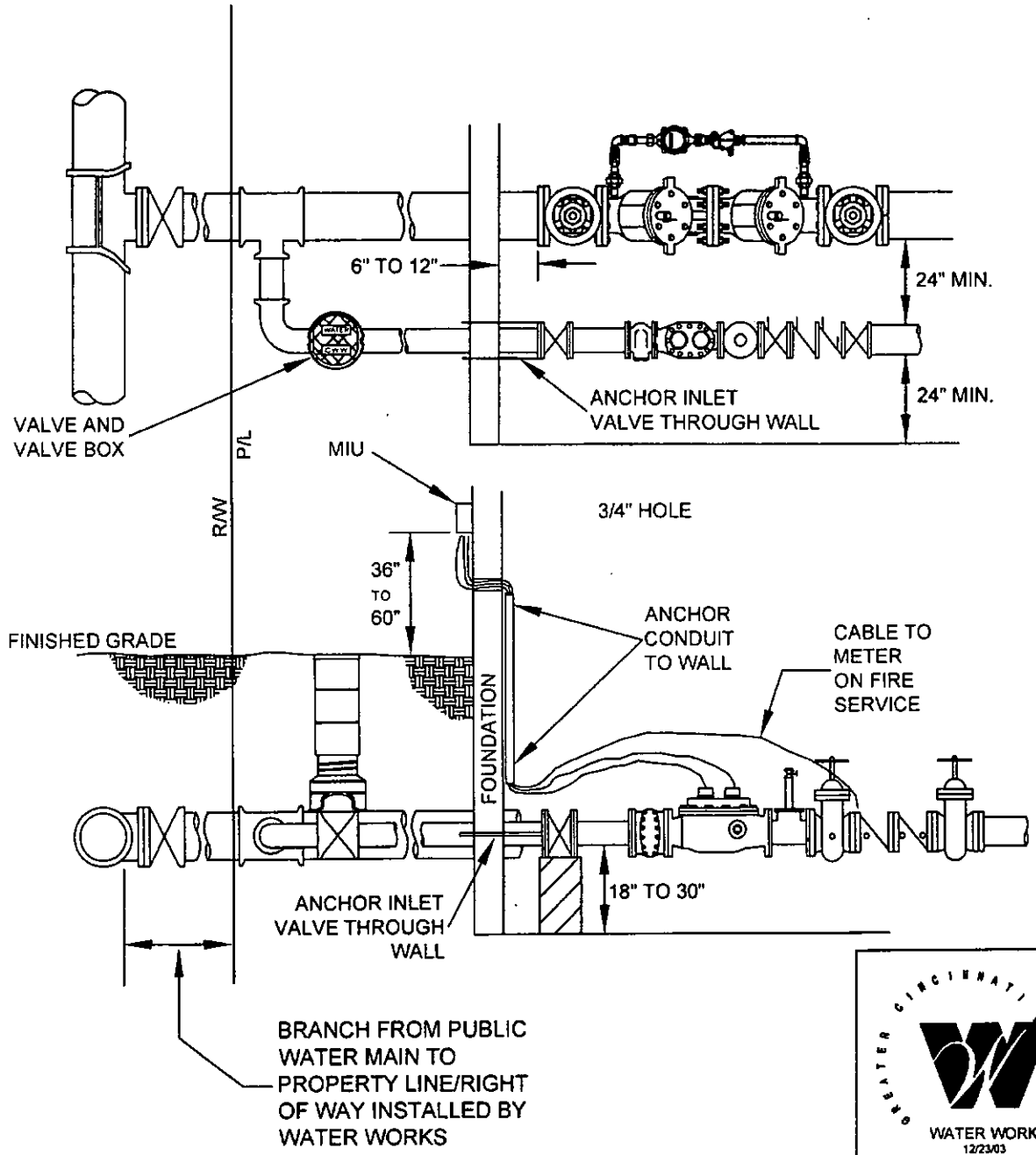

DETAILS:

A) SEE 108-1B FOR MATERIAL AND CONSTRUCTION SPECIFICATIONS AND 108-1E FOR AMR SPECIFICATIONS.
B) SEE 108-6 FOR PIPING ARRANGEMENT ON DOMESTIC METER.
C) SEE 108-7 FOR PIPING ARRANGEMENT ON DETECTOR CHECK VALVE ASSEMBLY.
D) 24" MINIMUM CLEARANCE SHALL BE MAINTAINED BETWEEN DOMESTIC METER AND DOUBLE DETECTOR CHECK VALVE ASSEMBLY AND A MINIMUM OF 24" FROM ANY WALL. DC METER SHALL BE INSTALLED ON THE SIDE OPPOSITE OF THE DOMESTIC METER. METER TO BE PURCHASED FROM GCWW AND INSTALLED BY CONTRACTOR.
E) ANY PUMPER CONNECTION MUST BE INSTALLED ON OPPOSITE SIDE OF DOUBLE DETECTOR CHECK METER ASSEMBLY AND DOWNSTREAM OF OUTLET VALVE.
F) A VALVE BOX COMPLETE MUST BE INSTALLED ON THE DOMESTIC BRANCH.
G) BLOCKING MUST BE UNDER VALVES.
H) BLOCKING MUST BE UNDER OS & Y VALVES.
I) A 3/4" HOLE MUST BE DRILLED THROUGH BUILDING FOUNDATION/WALL AND AFTER RUNNING WIRE, FILLED WITH SILICON SEALANT. WIRE MUST BE RUN THROUGH 3/4" CONDUIT THROUGH HOLE IN FOUNDATION/WALL. THERE MUST BE 1 FOOT OF WIRE LEFT AT METER AND THROUGH HOLE IN FOUNDATION/WALL. CONDUIT SHALL BE ANCHORED TO WALL.

GREATER CINCINNATI WATER WORKS 12/23/03	**INSIDE EMR DUAL SERVICE SETTING** FOR 3" OR LARGER DOMESTIC METER WITH BACKFLOW PREVENTER		
	GREATER CINCINNATI WATER WORKS COMMERCIAL SERVICES DIVISION		
	APPROVED	DATE 1/1/04	STANDARD DRAWING 108-18

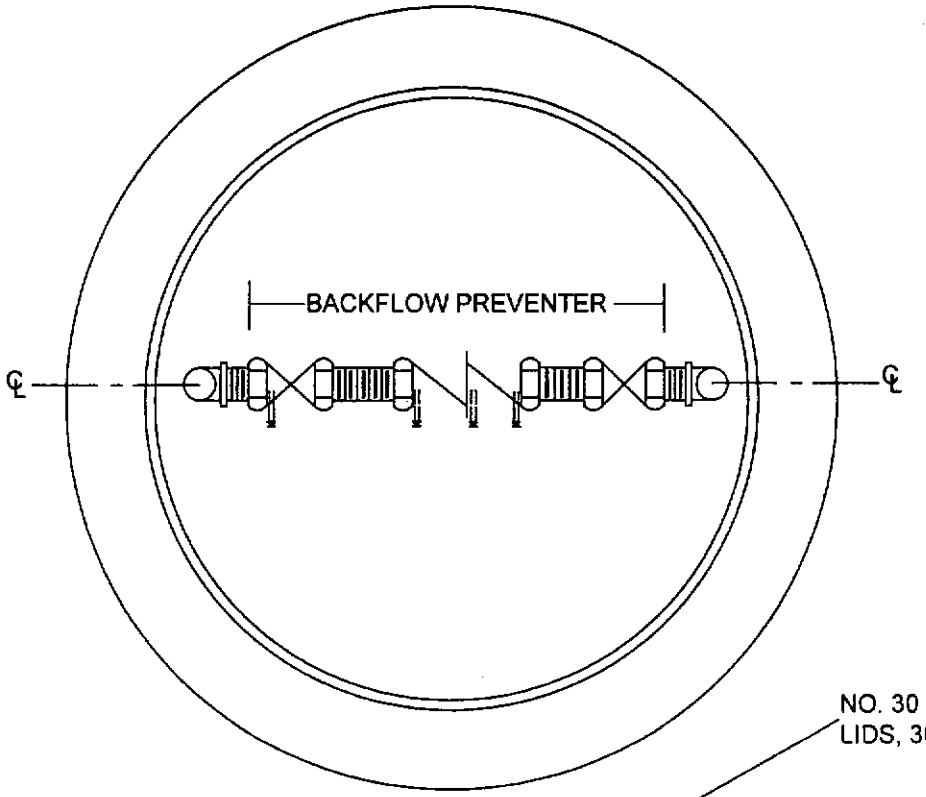

DETAILS:

A) THE BACKFLOW PREVENTER SHALL BE LOCATED AS CLOSE AS PRACTICAL TO THE METER SETTING.

B)THAT PORTION OF THE SERVICE PIPING BETWEEN THE METER AND THE BACKFLOW PREVENTER SHALL BE VOID OF BRANCHES OR OUTLETS OF ANY KIND.

C) BACKFLOW PREVENTER SHALL BE CENTERED IN BOX, 15" TO 19" BELOW GRADE.

D) BACKFLOW PREVENTER MUST BE NO SMALLER THAN THE SIZE OF THE METER.

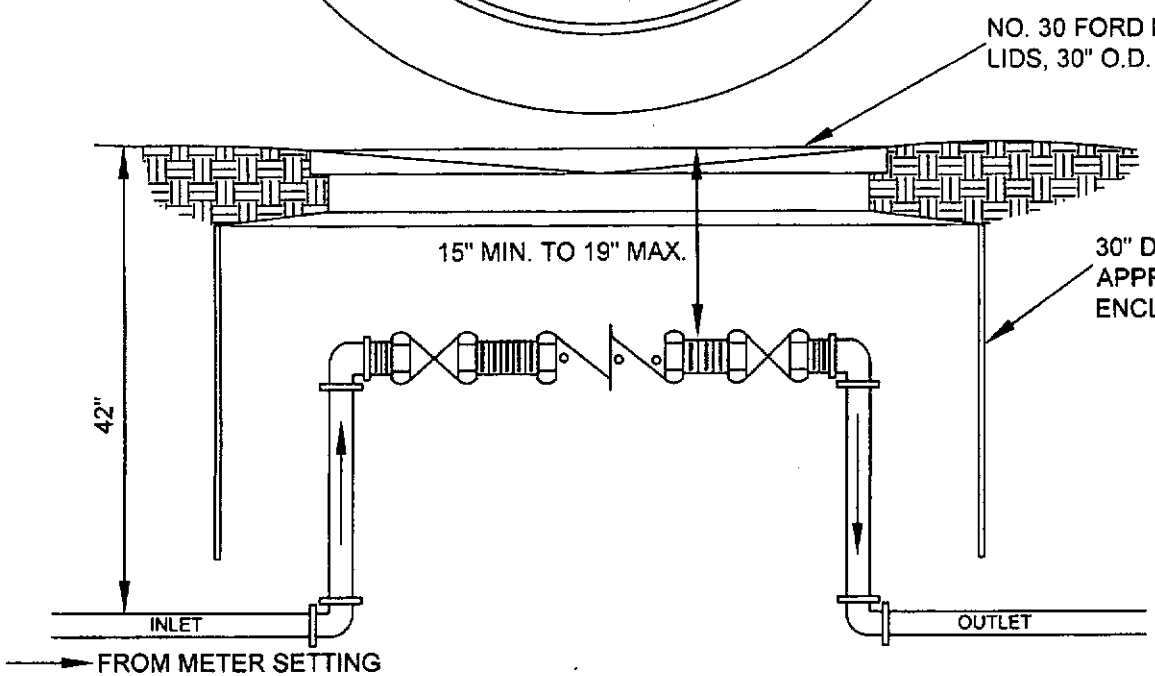

GREATER CINCINNATI WATER WORKS
12/23/03

OUTSIDE 3/4" TO 2" DOUBLE CHECK
BACKFLOW PREVENTER IN FROST PROOF SETTING

GREATER CINCINNATI WATER WORKS
COMMERCIAL SERVICES DIVISION

APPROVED	DATE	STANDARD DRAWING
Paul Toma	1/1/04	108-19

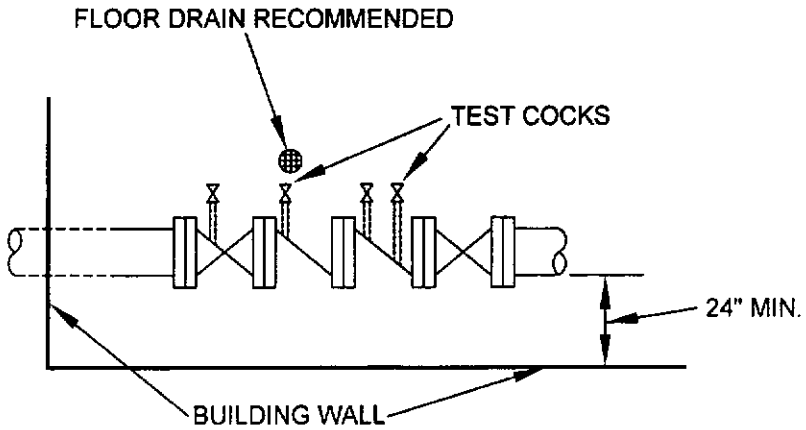

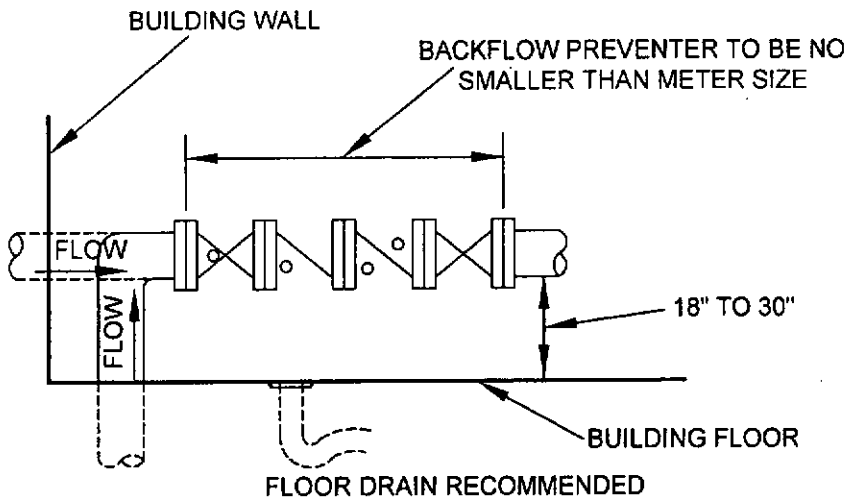

DETAILS:

A) IF THE BACKFLOW PREVENTER IS ALLOWED TO BE INSTALLED INSIDE A BUILDING, THAT PORTION OF THE SERVICE PIPING BETWEEN THE METER AND THE BACKFLOW PREVENTER SHALL BE VOID OF BRANCHES OR OUTLETS OF ANY KIND.

B) THE BACKFLOW PREVENTER INSIDE A BUILDING SHALL BE LOCATED AS CLOSE AS POSSIBLE TO THE POINT WHERE THE PIPING ENTERS THE BUILDING. THIS LOCATION SHALL BE DETERMINED BY THE GCWW.

C) THE BACKFLOW PREVENTER SHALL BE INSTALLED DOWNSTREAM OF THE METER, A MINIMUM OF 24" FROM THE NEAREST WALL, WITH THE TEST COCKS FACING THE CENTER OF THE ROOM.

D) WATER WILL BE SPILLED DURING PERIODIC TESTING OF ALL BACKFLOW PREVENTERS AND DURING OPERATION OF REDUCED PRESSURE TYPE PREVENTERS. FOR THIS REASON, IT IS RECOMMENDED THAT A FLOOR DRAIN BE INSTALLED AS CLOSE AS POSSIBLE TO THE DEVICE.

E) IN LIEU OF A FLOOR DRAIN, THE DISCHARGE FROM A REDUCED PRESSURE BACKFLOW PREVENTER MAY BE PIPED TO A SEWER PROVIDED AN APPROVED AIR-GAP IS MAINTAINED AT THE RELIEF VALVE OF THE DEVICE.

GREATER CINCINNATI WATER WORKS 12/23/03	**INSIDE SETTING OF BACKFLOW PREVENTER**		
	GREATER CINCINNATI WATER WORKS COMMERCIAL SERVICES DIVISION		
	APPROVED Paul Tom	DATE 1/1/04	STANDARD DRAWING 108-20

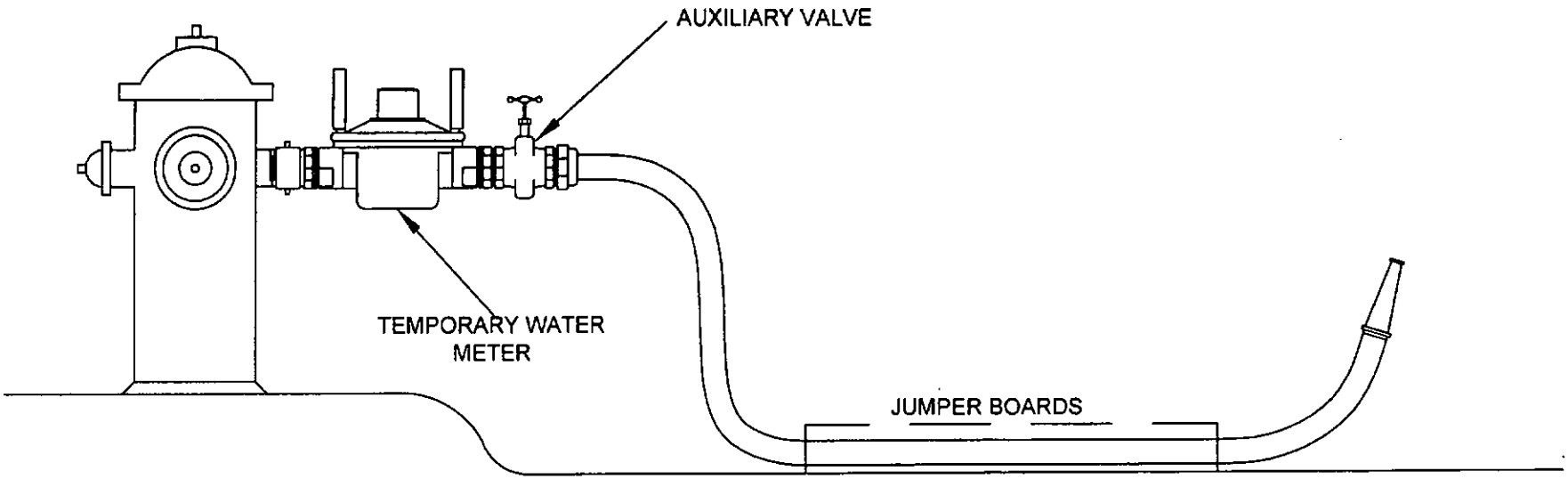

A) A PERFORMANCE BOND MUST BE ON FILE WITH THE GCWW.
B) LOCAL FIRE DEPARTMENT APPROVAL MUST BE ACQUIRED.
C) WHEN A & B ARE MET, PICK UP PERMIT, METER AND SPANNER WRENCH AT GCWW.
D) USE AN APPROVED FIRE HYDRANT SPANNER ONLY, TURN ON AND OFF SLOWLY.
E) FIRE HYDRANT SHOULD BE TURNED ON FULL AND AUXILIARY VALVE USED TO CONTROL FLOW OF WATER.
F) ALL CAPS MUST BE ON TIGHT TO PREVENT LEAKAGE.
G) WHERE VOLUME IS RESTRICTED, HOSE MUST BE NO LARGER THAN 1 1/2".
H) WHERE TRAFFIC CROSSES HOSE, JUMPER BOARDS MUST BE USED.
I) WHEN JOB IS COMPLETE REMOVE METER, PUMP OUT HYDRANT AND PUT ALL CAPS BACK ON TIGHT.
J) RETURN METER AND SPANNER WRENCH TO GCWW.
K) IN FREEZING WEATHER, PUMP OUT FIRE HYDRANT EACH DAY AFTER USE, AND PHONE THE FIRE DEPARTMENT WHICH HAS JURISDICTION.

PERMIT MAY BE REVOKED FOR FAILURE TO COMPLY WITH ABOVE REGULATIONS.

GREATER CINCINNATI WATER WORKS 12/23/03	CONNECTION TO FIRE HYDRANT FOR TEMPORARY WATER		
	GREATER CINCINNATI WATER WORKS COMMERCIAL SERVICES DIVISION		
	APPROVED	DATE 1/1/04	STANDARD DRAWING 108-21

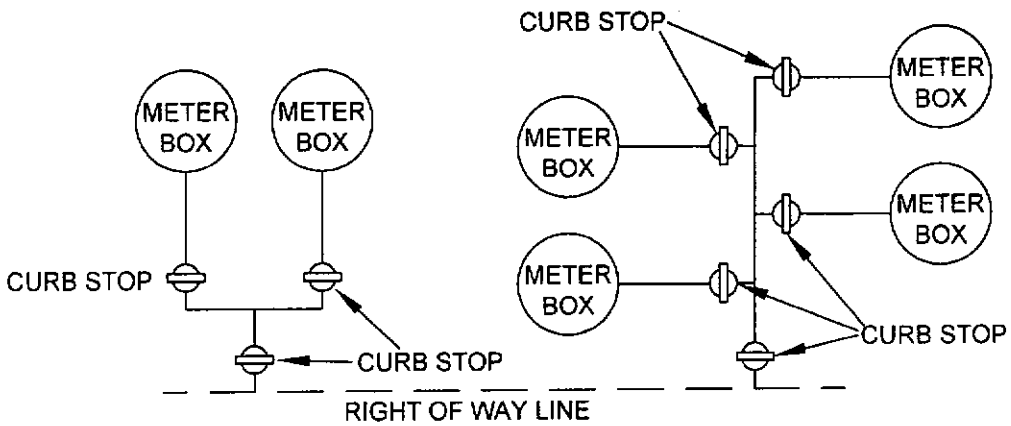

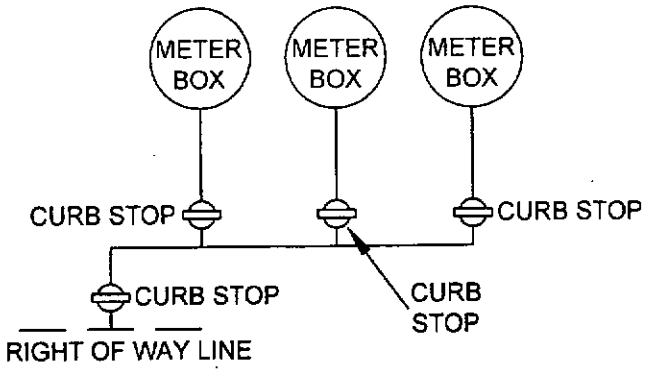

DETAILS:

A) APPROVAL OF ALL MANIFOLD SETTINGS SHALL BE DETERMINED BY THE DIRECTOR OR AUTHORIZED REPRESENTATIVE.

B) IN NO CASE SHALL THE CAPACITY (IN GALLONS) OF THE TOTAL METERS BE GREATER THAN THE CAPACITY OF THE BRANCH.

C) ALL TEES SHALL BE SILVER SOLDERED.

D) METERS INSTALLED IN OUTSIDE MANIFOLD MAY BE INSTALLED IN SEVERAL WAYS, BUT IN ALL CASES THE BOXES SHALL BE INSTALLED AS CLOSE TOGETHER AS POSSIBLE.

E) THE REDUCTION TO ACCOMMODATE EACH METER SHALL BE MADE AT THE TEE OR ON THE VERTICAL RISER (WITHIN 4" OF THE INLET VALVE).

F) A CURB BOX SHALL BE INSTALLED OVER EACH INDIVIDUAL CURB STOP OF EACH INDIVIDUAL MANIFOLD METER, PLUS A CURB BOX SHALL BE INSTALLED OVER THE MAIN BRANCH CURB STOP.

GREATER CINCINNATI WATER WORKS 12/23/03	**MANIFOLD METERS FROST PROOF BOX SETTING**		
	GREATER CINCINNATI WATER WORKS COMMERCIAL SERVICES DIVISION		
	APPROVED Paul Tarno	DATE 1/1/04	STANDARD DRAWING 108-22

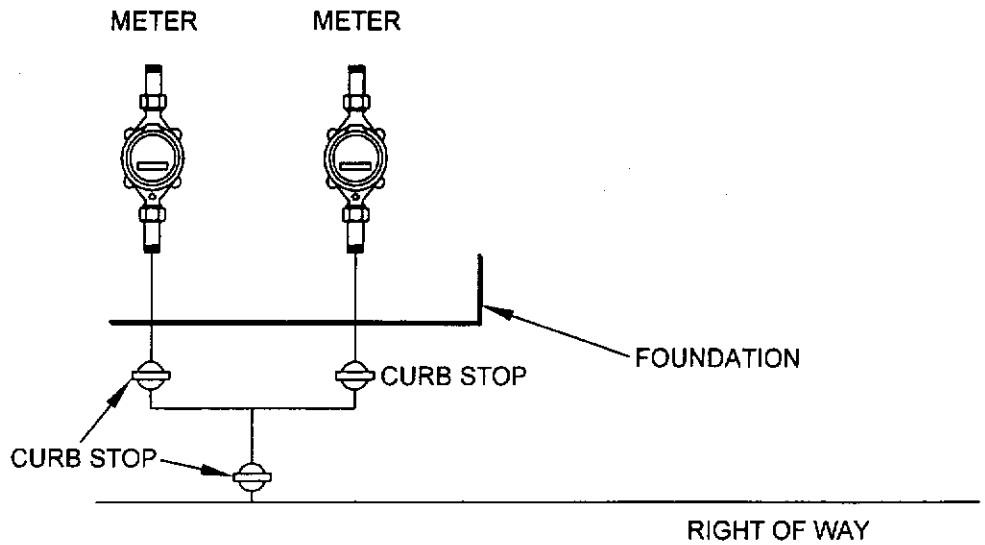

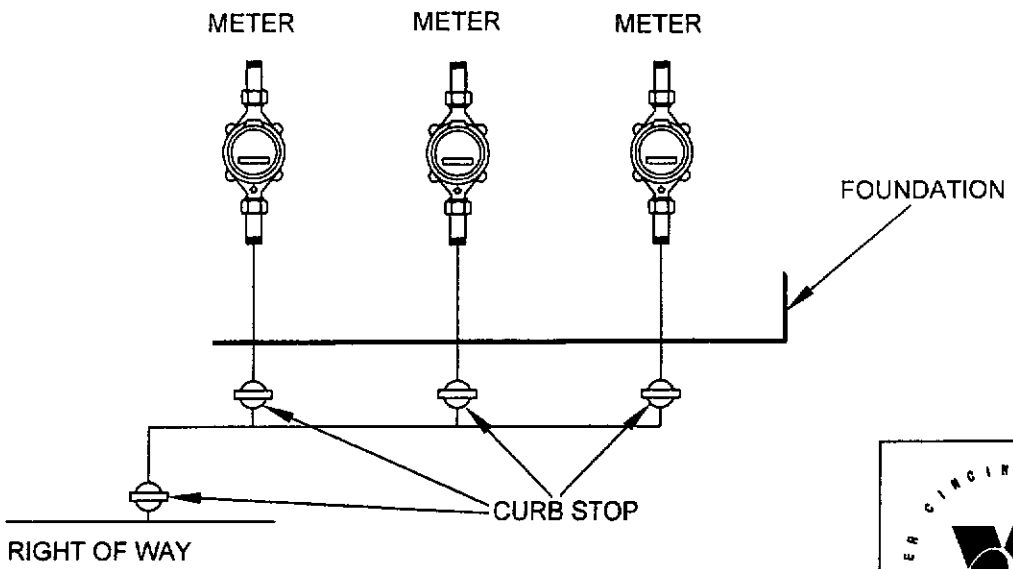

DETAILS:

A) APPROVAL OF ALL MANIFOLD SETTINGS SHALL BE DETERMINED BY THE DIRECTOR OR AUTHORIZED REPRESENTATIVE.

B) IN NO CASE SHALL THE CAPACITY (IN GALLONS) OF THE TOTAL METERS BE GREATER THAN THE CAPACITY OF THE BRANCH.

C) METERS INSTALLED IN AN "INSIDE" MANIFOLD MAY BE INSTALLED IN SEVERAL WAYS, BUT IN ALL CASES THE METERS SHALL BE INSTALLED AS CLOSE TOGETHER AS POSSIBLE.

D) THE REDUCTION TO ACCOMMODATE EACH METER SHALL BE MADE AT THE TEE OR ON THE VERTICAL RISER (WITHIN 4" OF THE INLET VALVE).

E) A CURB BOX SHALL BE INSTALLED OVER EACH INDIVIDUAL CURB STOP OF EACH INDIVIDUAL MANIFOLD METER, PLUS A CURB BOX SHALL BE INSTALLED OVER THE MAIN BRANCH CURB STOP.

F) ALL METERS INSTALLED IN MANIFOLD SHALL BE INSTALLED IN A STANDARD METER SETTING PER STANDARD DRAWING 108-3 OR 108-3A INSIDE METER SETTING STANDARD DETAIL FOR THE APPROPRIATE METER SIZE.

GREATER CINCINNATI WATER WORKS 12/23/03	**MANIFOLD METERS INSIDE SETTING**		
	GREATER CINCINNATI WATER WORKS COMMERCIAL SERVICES DIVISION		
	APPROVED	DATE 1/1/04	STANDARD DRAWING 108-23