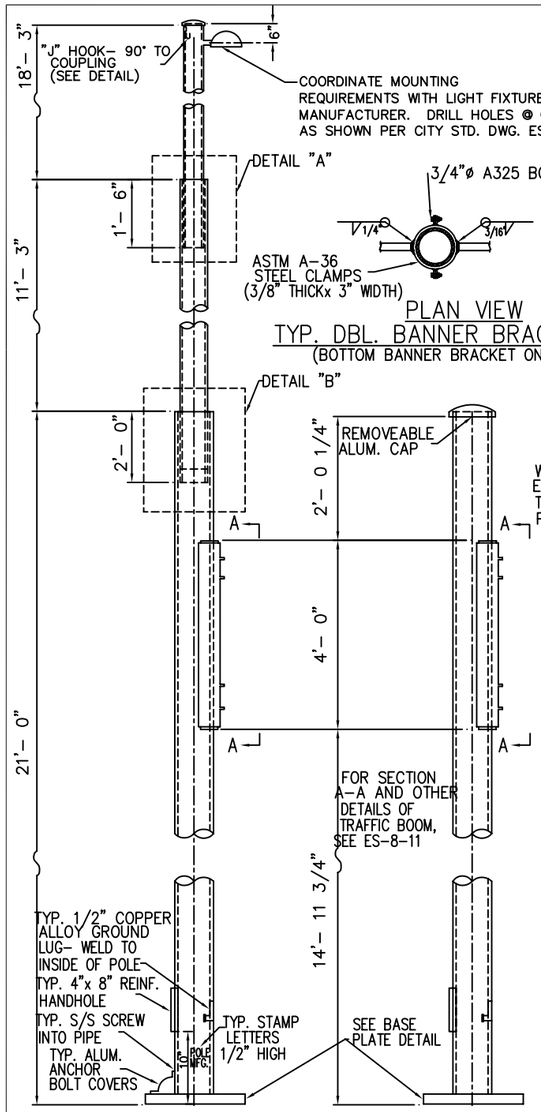

PLAN VIEW
TYP. DBL. BANNER BRACKET
(BOTTOM BANNER BRACKET ONLY)

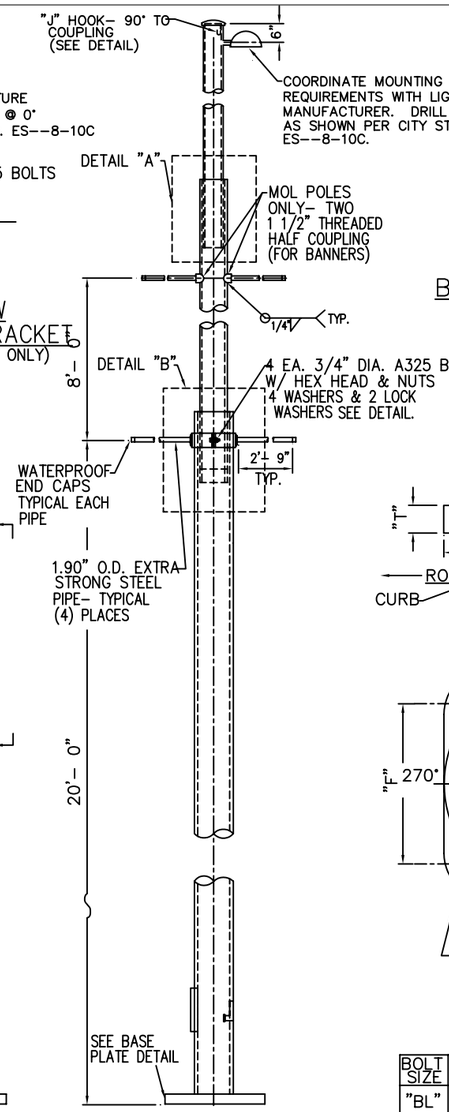

REMOVABLE POLE TOP

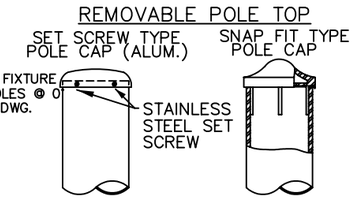

"J" HOOK WIRE SUPPORT

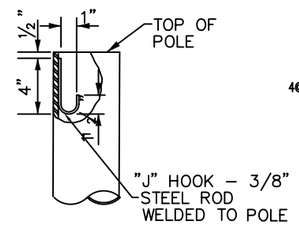

BASE PLATE DETAIL
STEEL PLATE

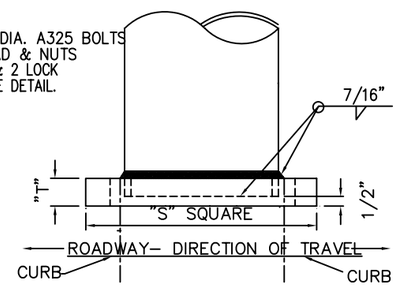

DETAIL "A"
UPPER SECTION JOINT

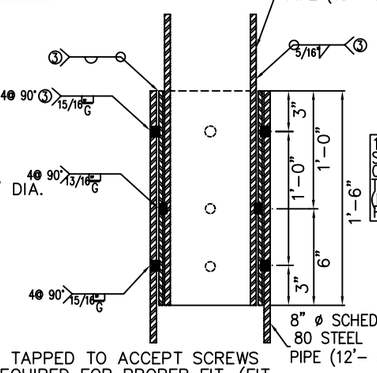

DETAIL "B"
LOWER SECTION JOINT
(BANNER COUPLING OMITTED FOR CLARITY)

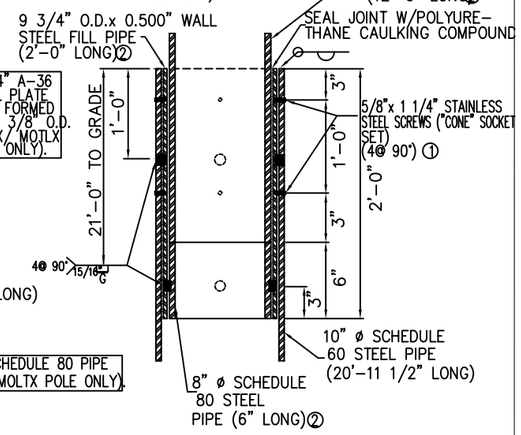

① OUTER TWO PIPES SHALL BE TAPPED TO ACCEPT SCREWS
② MACHINE O.D. OF PIPE AS REQUIRED FOR PROPER FIT. (FIT SHALL BE CHECKED IN SHOP FOR EASE OF INSTALLATION & PLUMBNESS)
③ THESE WELDS SHALL BE MADE ONLY AFTER THE FABRI–CATOR VERIFIES THE PLUMBNESS OF THE POLES CONNECTED

FED. RD. DIV.	STATE	PROJECT	FISCAL YEAR
5	OHIO		

HANDHOLES

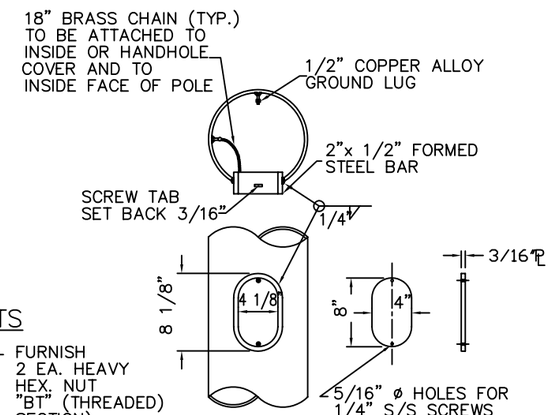

ANCHOR BOLTS

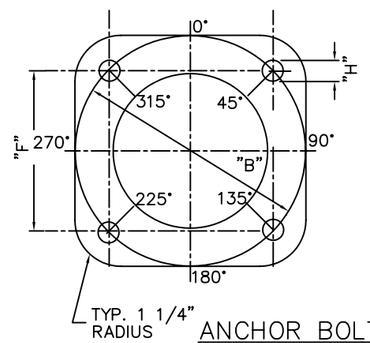

ACCESSORY ORIENTATION

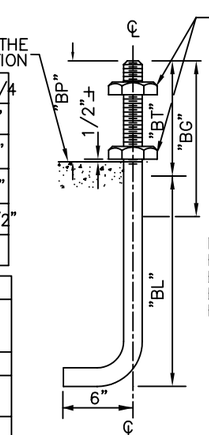

BOLT SIZE	1–3/4	2–1/4
"BL"	75"	80"
"BT"	9"	10"
"BG"	11"	12"
"BP"	6 1/2	7 1/2
X POLE "BP"	6 1/2	8"

NOTE: THE TOP OF FOUNDATION SHALL BE FINISHED EQUAL TO THE FINAL GRADE

NOTE: GALVANIZED PORTION OF ANCHOR BOLT THAT WILL BE EMBEDDED IN CONCRETE SHALL BE GIVEN A CHROMATE TREATMENT.

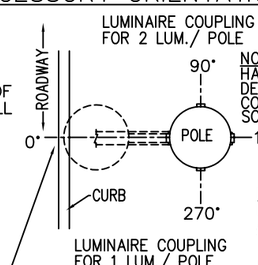

NOTE:
HANDHOLE FOR POLE DESIGNATED WITH TRAFFIC CONTROLLER (SEE POLE SCHEDULE).
① HANDHOLE
② 1/2 COUPLING

NOTE:
BOTTOM BANNER BRACKET IS ADJUSTABLE (SEE PLAN); TOP BANNER BRACKET IS FIXED.

① TRAFFIC BOOM PLATES
② LUMINAIRE COUPLING FOR 1 LUM./ POLE
③ TOP BANNER 1/2 COUPLING

PLAN VIEW

MATERIALS

BANNERS
BOTTOM BANNER BRACKETS SHALL BE FABRICATED OF ASTM A–36 STELL, 3/8 INCH THICK BY 3 INCHES WIDE. TOP BANNER COUPLING SHALL BE 1 1/2 INCH THREADED 1/2 COUPLINGS. BRACKET PIPE SHALL BE 33 INCHES IN LENGTH AND ASTM A–501 EXTRA STRONG PIPE WITH 1.9 INCH O.D. AND 0.2 INCH WALL THICKNESS.
ALL STEEL PIPE SHALL CONFORM TO ASTM A–53, TYPE S,GRADE B UNLESS OTHERWISE NOTED.
STEEL FILL PIPES SHALL CONFORM TO ASTM A–513, TYPE 5 OR COLD FORMED FROM A–36 STEEL PLATE.
RECTANGULAR STEEL TUBING SHALL CONFORM TO ASTM A–500, GRADE B.
STEEL BARS AND PLATES SHALL CONFORM TO ASTM A–36.
ANCHOR BOLTS SHALL CONFORM TO ASTM A–36; NUTS SHALL CONFORM TO ASTM A–563 GRADE A, HEAVY HEX.
BOLTS FOR BOOM ATTACHMENT SHALL CONFORM TO ASTM A–325; NUTS SHALL CONFORM TO ASTM A–563, GRADE DH, HEAVY HEX; WASHERS SHALL CONFORM TO ASTM A–436. THESE ITEMS SHALL BE SUPPLIED WITH THE POLE.
ALL BOLTS, NUTS AND WASHERS DESCRIBED ABOVE SHALL BE HOT DIP GALVANIZED IN ACCORDANCE WITH ASTM A–153. BANNER BRACKETS, COUPLING & PIPE SHALL BE GALV. PER A–123 WHERE ALUMINUM WILL BE IN CONTACT WITH ANOTHER METAL AND/ OR CONCRETE, CONTACT SURFACES SHALL BE THOROUGHLY COATED WITH AN ALUMINUM IMPREGNATED CAULKING COMPOUND.

PAINTING
ALL CARBON STEEL MATERIAL SHALL BE SHOP PAINTED AS FOLLOWS;
A. EXTERIOR– ONE COAT OF IRON OXIDE PRIMER.
B. INTERIOR– ONE COAT OF RED LEAD PRIMER.

WELDING
ALL WELDING SHALL CONFORM TO THE LATEST EDITION OF THE AMERICAN WELDING SOCIETY'S "STRUCTURAL WELDING CODE."
CP DENOTES COMPLETE PENETRATION WELD. THESE WELDS SHALL BE GROUND FLUSH WITH ADJACENT SURFACES UNLESS OTHERWISE PERMITTED BY THE ENGINEER.

POLES
THE UPPER SECTION JOINT SHALL BE COMPLETED IN SHOP. THE LOWER SECTION JOINT SHALL BE COMPLETED IN FIELD; HOWEVER THE FIT AND PLUMBNESS OF THIS JOINT SHALL BE CHECKED IN THE SHOP.
FOR MOL TYPE POLES FURNISH BANNER COUPLING, BRACKET & PIPES.
HARDWARE, NUTS & SCREWS FOR ALUMINUM POLE TOP CAPS, ANCHOR BASE BOLT COVERS, AND HANDHOLE COVER SHALL BE 18–8 STAINLESS STEEL.

MOLT TYPE
MOLTX TYPE

MOT TYPE
MOTX TYPE

MOL TYPE
(FOR DIMENSIONS NOT SHOWN, SEE MOLT)

STEEL ANCHOR BASE POLES– PHYSICAL PROPERTIES
* LENGTH INCLUDES 6" HOOK AT BOTTOM OF BOLT

CITY OF CINCINNATI DESIGN NO.	PIPE SHAFT DIMENSIONS (INCH.)						ANCHOR BASE (IN.)	BASE DIMENSIONS (INCHES)				
	LOWER SECTION		MIDDLE SECTION		TOP SECTION		* BOLT SIZE & LENGTH	BOLT CIRCLE	BOLT FLAT	BOLT HOLE	BASE SQUARE	BASE THICK
	BASE O.D.	WALL	PIPE O.D.	WALL	PIPE O.D.	WALL		"B"	"F"	"H"	"S"	"T"
MOL	10 3/4	0.500	8 5/8	0.500	6 5/8	0.280	1 3/4x 90"	15	10 5/8	2 1/8	16	2
MOT	10 3/4	0.500	–	–	–	–	2 1/4x 96"	18	12 3/4	2 5/8	19	2
MOLT	10 3/4	0.500	8 5/8	0.500	6 5/8	0.280	2 1/4x 96"	18	12 3/4	2 5/8	19	2
MOTX/MOLTX	12 3/4	0.688	8 5/8	0.500	6 5/8	0.280	2 1/4x 96"	22	15 1/2	2 5/8	23	2 1/2

STATE OF OHIO
STEVEN GERALD BAILEY 49331
REGISTERED PROFESSIONAL ENGINEER

S.C.H.	Steve Bailey	9/16/04	UPDATE
T.E.		3/1/98	
DESIGN	REVISION / APPROVED	DATE 9/29/94	WO #

MPL / MOL –T SYSTEMS (ES–8)

MOL/ T TYPE
LIGHTING & TRAFFIC POLES

CITY OF CINCINNATI
DEPT. OF TRANSPORTATION & ENGR.
DIV. OF TRAFFIC ENGR.

APPROVED Steve Bailey DATE 3–4–99

SCALE	SOURCE	DRAWN	FILE NO.
–		VGRD	ES–8–10A

FED. RD. REGION	STATE	PROJECT	FISCAL YEAR
5	OHIO		

BACK TUBES (TYP.)

FOUR REQUIRED. USE 4"x 4"x 1/4" TUBES FOR MPL & MPLT POLES. USE 4"x 4"x 3/8" TUBES FOR MPLTX POLES. FOUR 3/16" DRILL CLEAR HOLES REQUIRED PER MEMBER FOR PANEL SECUREMENT. HOLE LOCATION MEASUREMENTS SHOWN BELOW ARE APPROXIMATE. USE PANELS TO DETERMINE EXACT HOLE LOCATIONS.

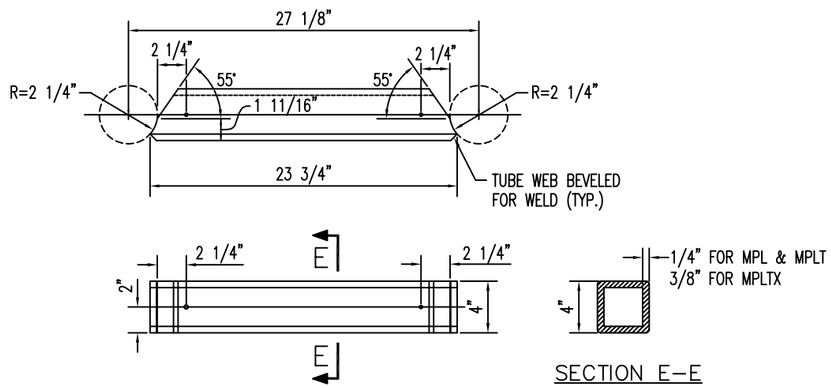

TOP & BOTTOM PANELS (TYP.)

FOUR REQUIRED. 16 GA. STEEL

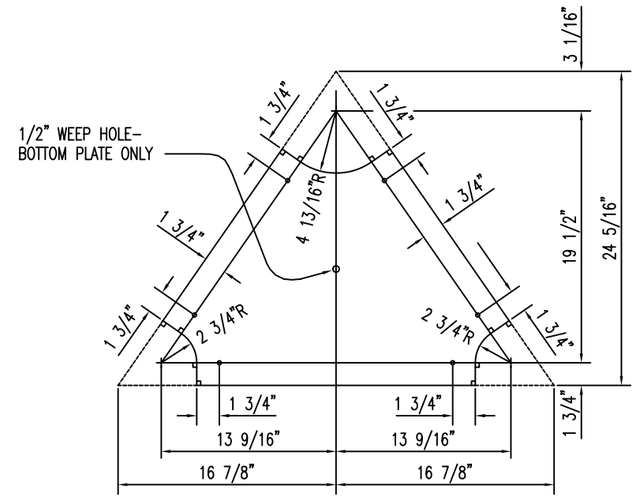

SIDE PANELS (TYP.)

FOUR REQUIRED. 16 GA. STEEL

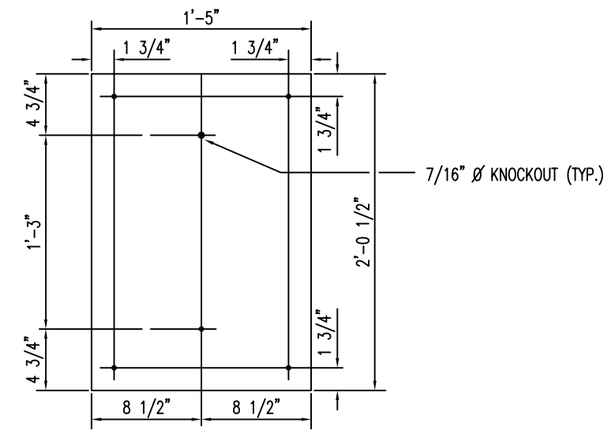

SIDE TUBES (TYP.)

EIGHT REQUIRED. USE 4"x 4"x 1/4" TUBES FOR MPL & MPLT POLES. USE 4"x 4"x 3/8" TUBES FOR MPLTX POLES. FOUR 3/16" DRILL CLEAR HOLES REQUIRED PER MEMBER FOR PANEL SECUREMENT. HOLE LOCATION MEASUREMENTS SHOWN BELOW ARE APPROXIMATE. USE PANELS TO DETERMINE EXACT HOLE LOCATIONS.

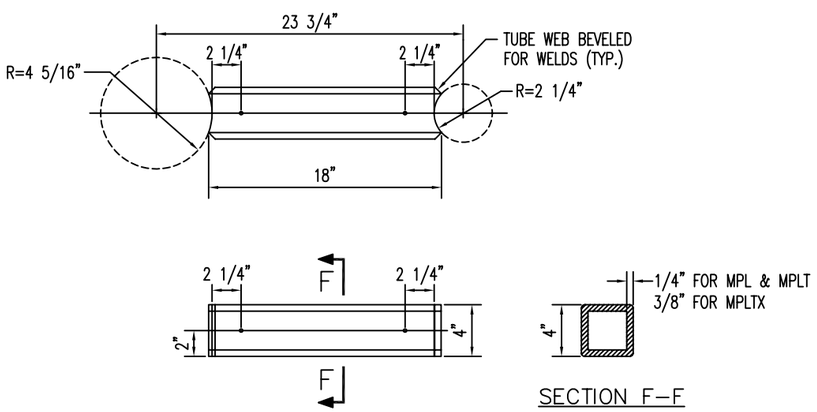

SIDE, TOP & BOTTOM PANEL FASTENING (TYP.)

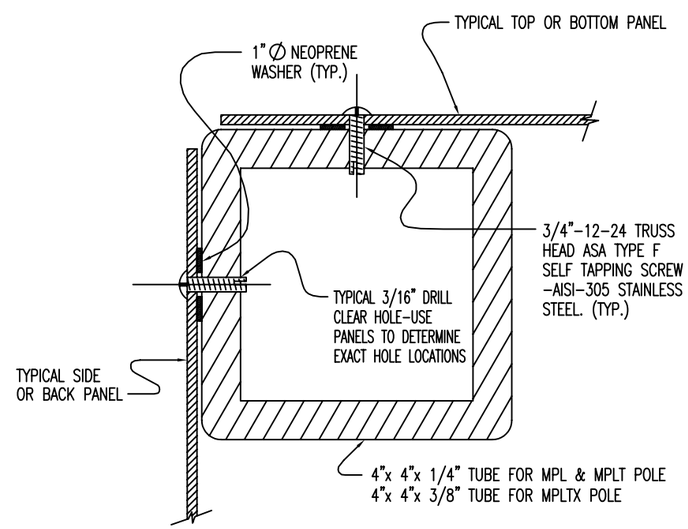

BACK PANELS (TYP.)

TWO REQUIRED. 16 GA. STEEL

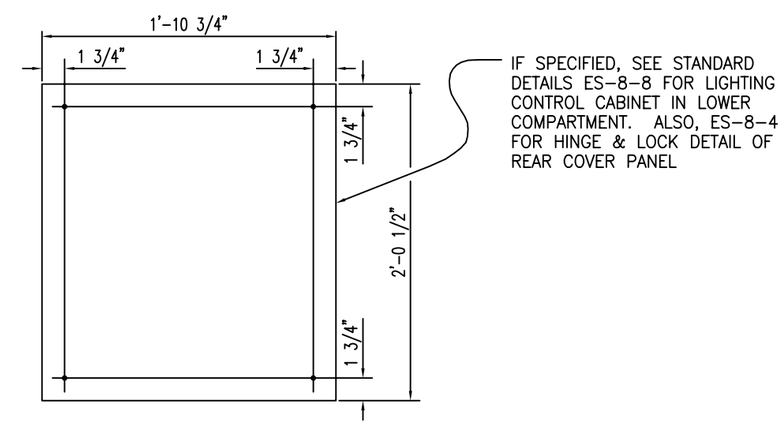

STATE OF OHIO
STEVEN GERALD BAILEY
49331
REGISTERED
PROFESSIONAL ENGINEER

MPL / MOL –T SYSTEMS (ES–8)

MPL, MPLT, MPLTX, MPT & MPTX
TYPE LIGHTING & TRAFFIC POLES

CITY OF CINCINNATI
DEPT. OF PUBLIC WORKS
DIV. OF TRAFFIC ENGR.

APPROVED Steve Bailey DATE 3-4-99

S.C.H.	Steve Bailey	9/28/04	UPDATE				
DESIGN	REVISION APPROVED	DATE	WO#	SCALE	SOURCE	DRAWN	FILE NO.
ENG/TE		4–15–93		N.T.S.		MLP	ES – 8 – 17

FED. RD. REGION	STATE	PROJECT	FISCAL YEAR
5	OHIO		

BOOM CONNECTION FOR MPLT & MPLTX POLES ONLY. SEE STANDARD DRAWING ES-8-11 FOR HIGH STRENGTH BOLT SIZING AND SPACING, AND FOR BOOM DETAILS.

UPPER TRI-LEG CONNECTION

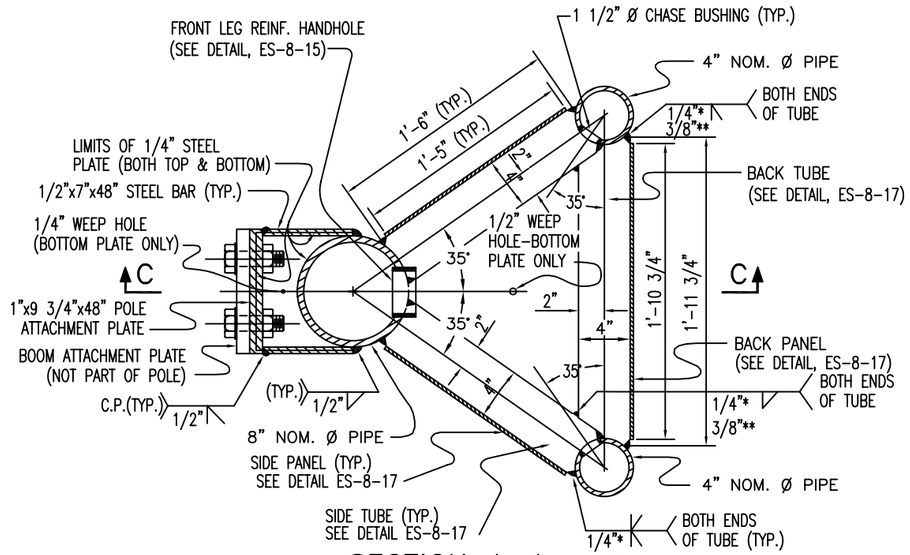

SECTION A-A

LOWER TRI-LEG CONNECTION

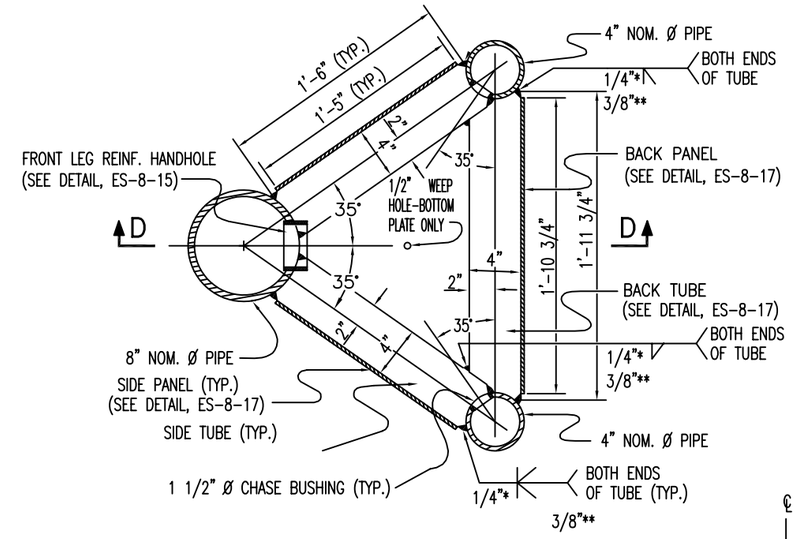

SECTION B-B

* USE 1/4" WELD FOR 4"x 4"x 1/4" TUBES ON MPL & MPLT POLES.

** USE 3/8" WELD FOR 4"x 4"x 3/8" TUBES ON MPLTX POLES.

④ FILLET WELD BOTH TOP AND BOTTOM OF BOTH ENDS OF BACK TUBE AND BOTH SIDE TUBES.

BOOM CONNECTION & FRONT LEG ELECTRIC WIRE BUSHING FOR MPLT & MPLTX POLES ONLY. SEE STANDARD DRAWING ES-8-11 FOR HIGH STRENGTH BOLT SIZING AND SPACING, AND FOR BOOM DETAILS.

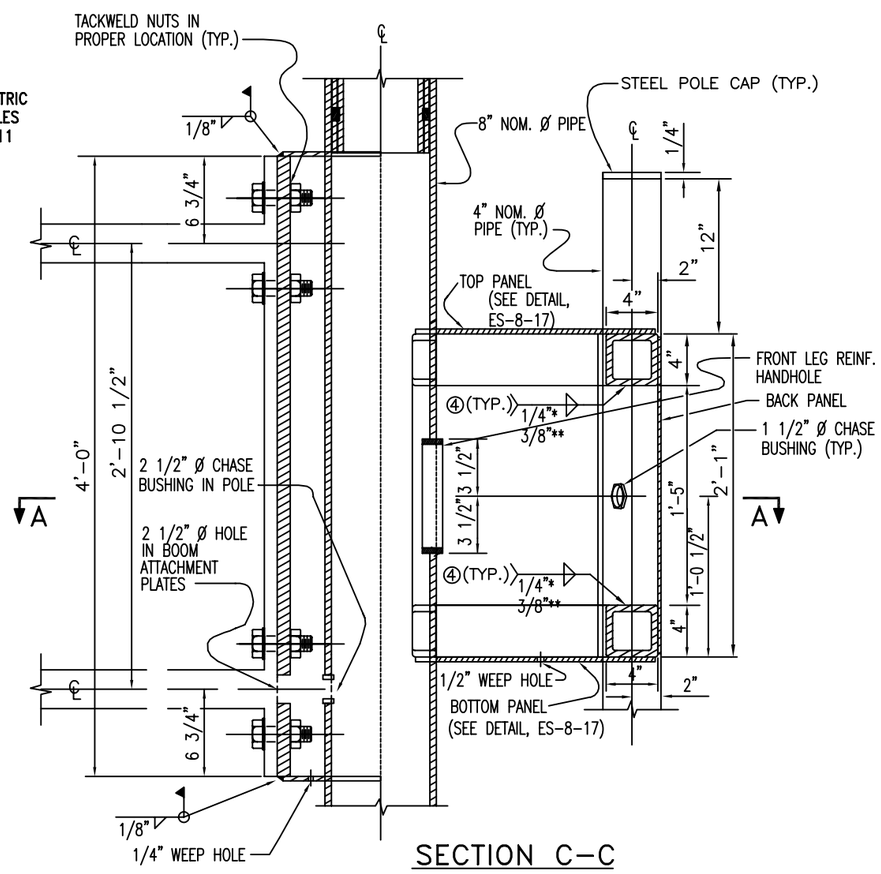

SECTION C-C

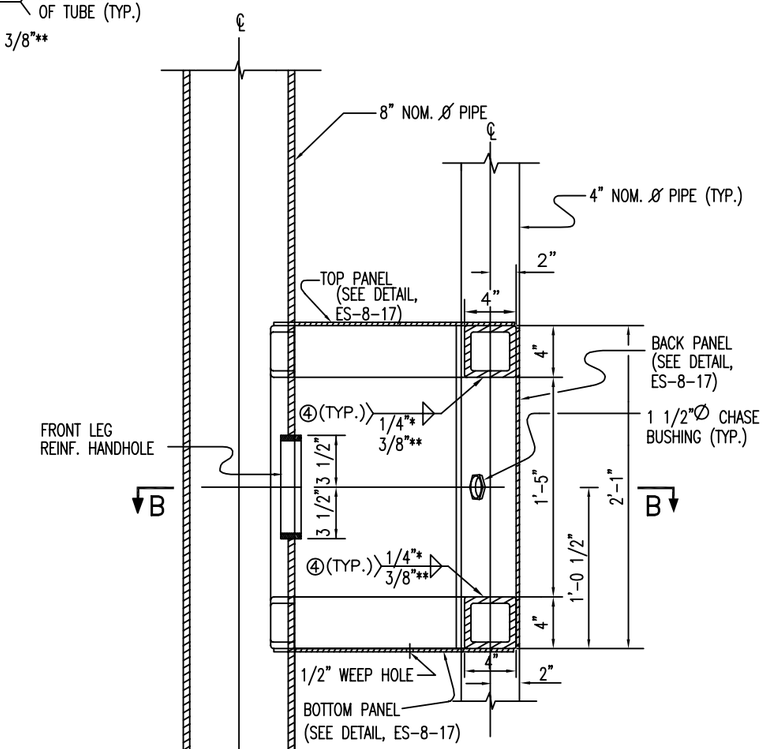

SECTION D-D

STATE OF OHIO
STEVEN GERALD BAILEY
49331
REGISTERED
PROFESSIONAL ENGINEER

S.C.H.	Steve Bailey	9/24/04	UPDATE

DESIGN	REVISION APPROVED	DATE	WO#
ENG/TE		4-15-93	

MPL / MOL -T SYSTEMS (ES-8)

MPL, MPLT, MPLTX, MPT & MPTX TYPE LIGHTING & TRAFFIC POLES

CITY OF CINCINNATI
DEPT. OF PUBLIC WORKS
DIV. OF TRAFFIC ENGR.

APPROVED Steve Bailey DATE 3-4-99

SCALE	SOURCE	DRAWN	FILE NO.
N.T.S.		MLP	ES-8-16

FED. RD. REGION	STATE	PROJECT	FISCAL YEAR
5	OHIO		

DETAIL "B"

LOWER PIPE SECTION JOINT
(BANNER COUPLING AND BOOM OMITTED FOR CLARITY)

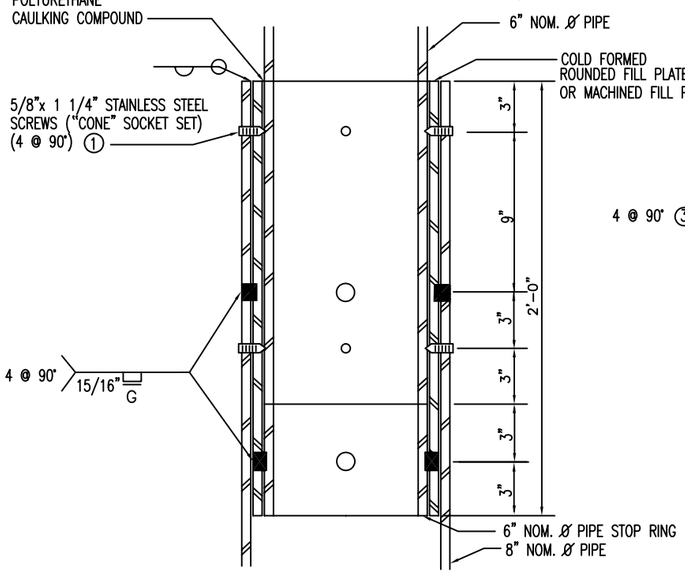

① OUTER TWO PIPES SHALL BE TAPPED TO ACCEPT SCREWS.

② MACHINE I.D. AND O.D. OF ROUNDED FILL PLATE OR FILL PIPE AS REQUIRED FOR SNUG FIT. CHECK FIELD CONNECTION IN SHOP FOR EASE OF INSTALLATION AND PLUMBNESS.

DETAIL "A"

UPPER PIPE SECTION JOINT

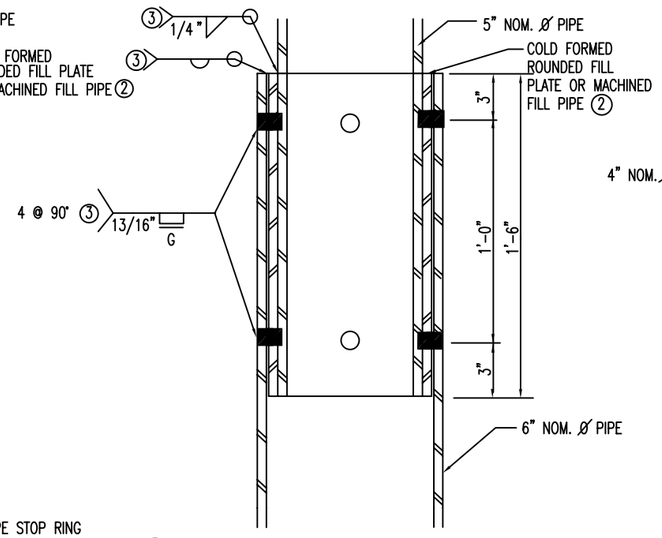

② MACHINE I.D. AND O.D. OF ROUNDED FILL PLATE OR FILL PIPE AS REQUIRED FOR SNUG FIT.

③ THESE WELDS SHALL BE MADE ONLY AFTER VERIFICATION OF PLUMBNESS.

STEEL POLE CAP DETAILS

ONE 5" NOM. Ø PIPE CAP REQUIRED. TWO 4" NOM. Ø PIPE CAPS REQUIRED.

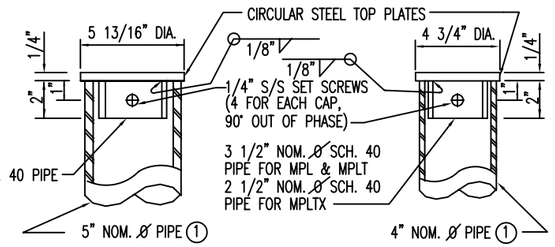

① PIPE SHALL BE TAPPED TO ACCEPT SET SCREWS

BASE PLATE DETAIL

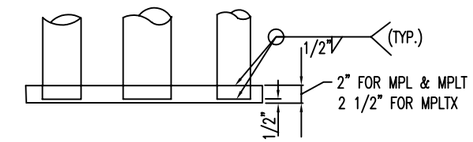

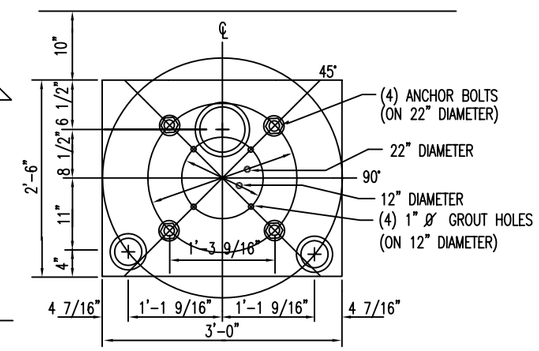

STEEL ANCHOR BOLT CAP DETAIL

FOUR ANCHOR BOLT CAPS REQUIRED

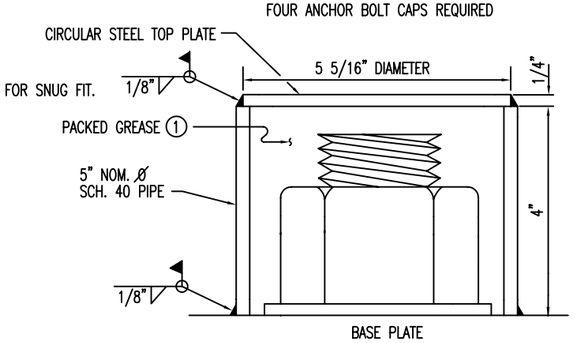

① WELD AT BASE PLATE, THEN COMPLETELY PACK PIPE INTERIOR WITH NONCORROSIVE GREASE, THEN WELD ON CIRCULAR TOP PLATE

ACCESSORY ORIENTATION

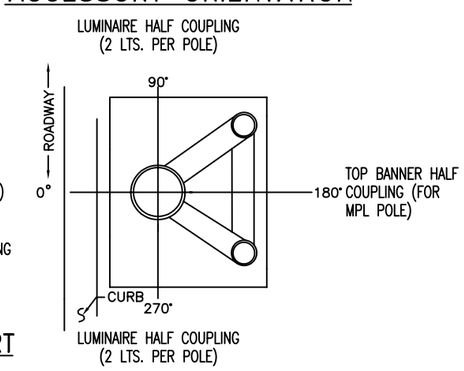

-TRAFFIC BOOM (FOR MPLT & MPLTX POLE)
-LUMINAIRE HALF COUPLING (1 LT. PER POLE)
-TOP BANNER HALF COUPLING (FOR MPL POLE)

PLAN VIEW

FRONT LEG HANDHOLES

THREE FRONT LEG HANDHOLES REQUIRED – ONE NEAR BASE & ONE AT EACH TRI LEG CONN. (HANDHOLES SHALL FACE TOWARD CENTER OF TRI LEG POLE ASSEMBLY EXCEPT FOR CONTROLLER POLE. FOR CONTROLLER POLE, LOWER HANDHOLE SHALL FACE 90° FROM CENTER OF TRI LEG POLE ASSEMBLY.)

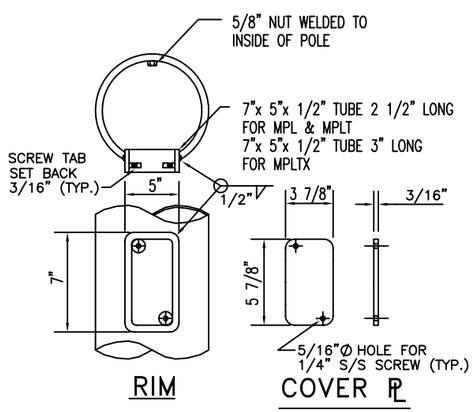

REAR LEG HANDHOLES

TWO REAR LEG HANDHOLES REQUIRED – ONE FOR EACH LEG (HANDHOLES SHALL FACE TOWARD CENTER OF TRI LEG POLE ASSEMBLY)

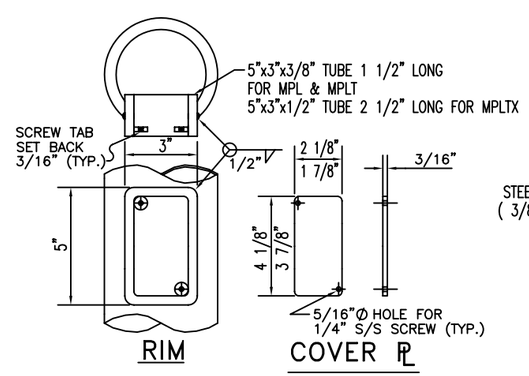

TYPICAL DOUBLE BANNER BRACKET

(BOTTOM BANNER BRACKET ONLY)

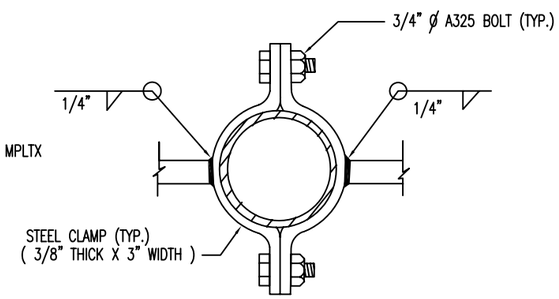

PLAN VIEW

"J" HOOK WIRE SUPPORT

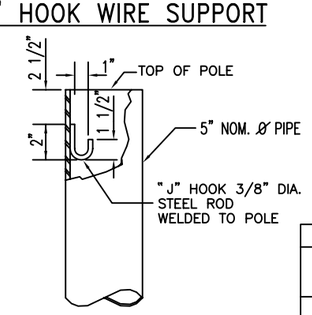

STATE OF OHIO
STEVEN GERALD BAILEY 49331 REGISTERED
PROFESSIONAL ENGINEER

S.C.H.	Steve Bailey	9/21/04	UPDATE
DESIGN	REVISION APPROVED	DATE	WO#
ENG/TE		4–15–93	

MPL / MOL –T SYSTEMS (ES–8)

MPL, MPLT, MPLTX, MPT & MPTX
TYPE LIGHTING & TRAFFIC POLES

CITY OF CINCINNATI
DEPT. OF PUBLIC WORKS
DIV. OF TRAFFIC ENGR.

APPROVED Steve Bailey DATE 3–4–99

SCALE	SOURCE	DRAWN	FILE NO.
N.T.S.		TKG	ES–8–15

FED. RD. REGION	STATE	PROJECT	FISCAL YEAR
5	OHIO		

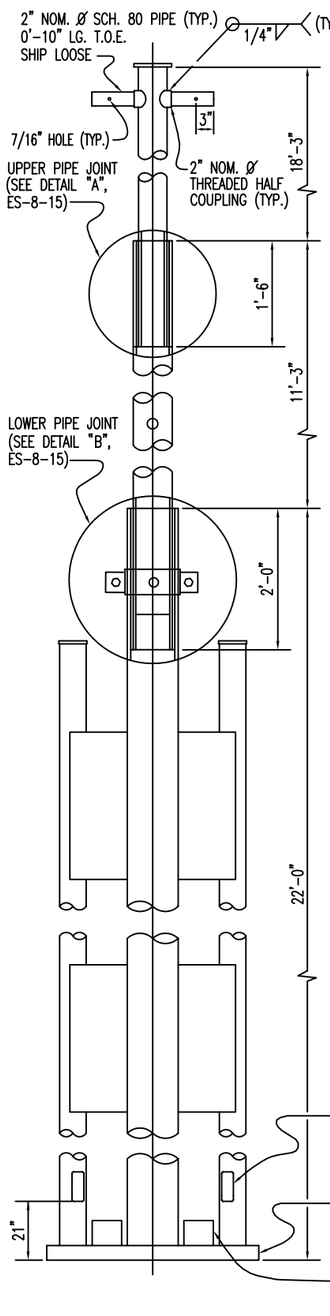

MPL TYPE – FRONT ELEV.

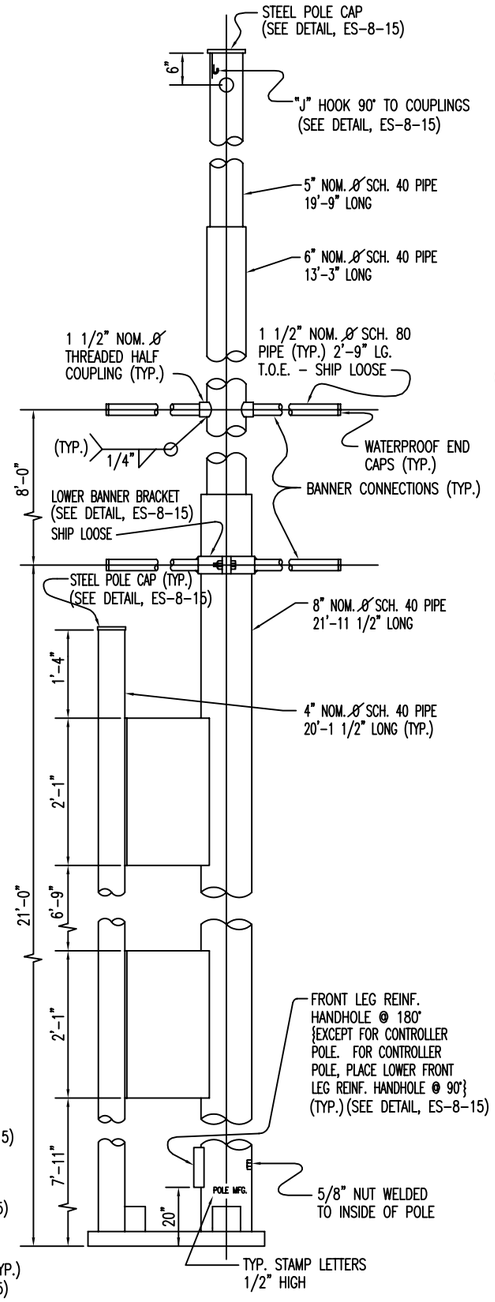

MPL TYPE – SIDE ELEV.

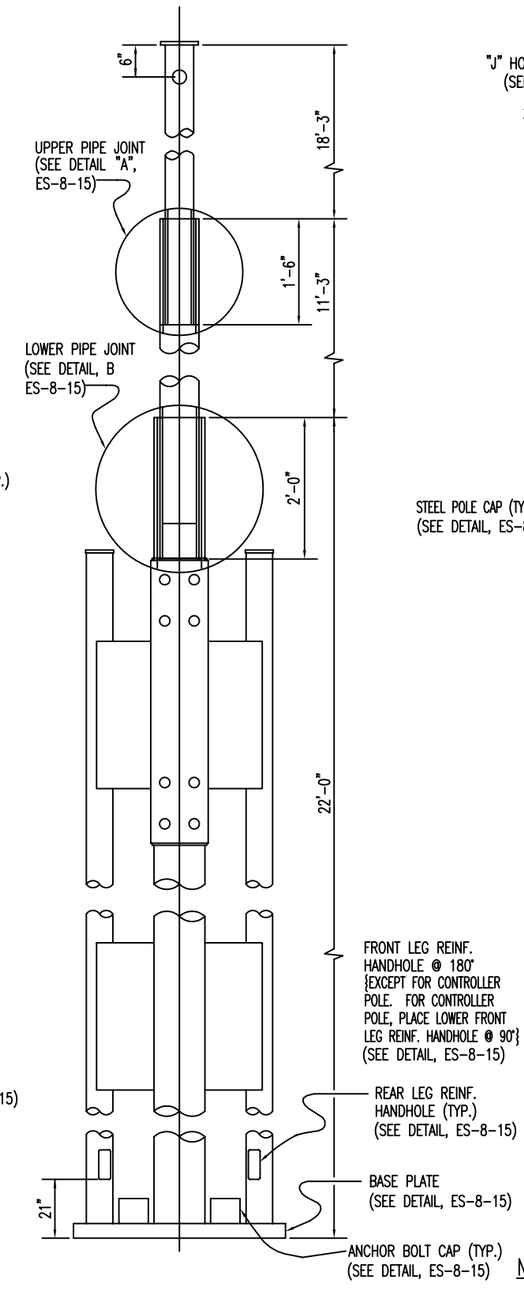

MPLT & MPLTX TYPE – FRONT ELEV.

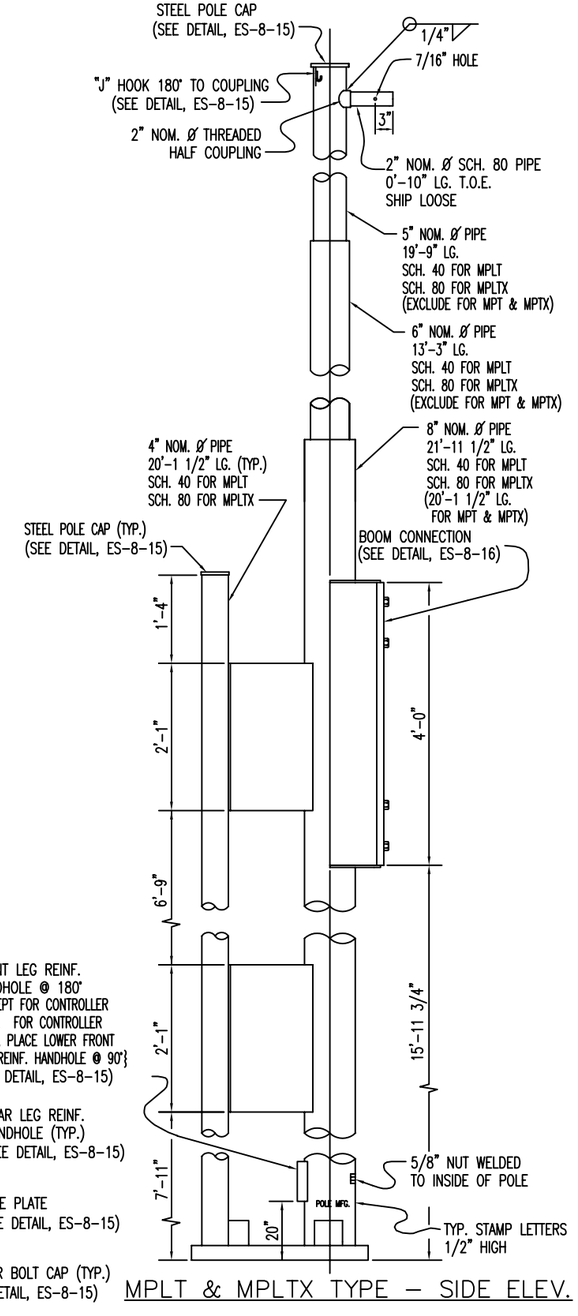

MPLT & MPLTX TYPE – SIDE ELEV.

NOTES

MPT & MPTX POLES

MPT & MPTX POLES SHALL BE CONSTRUCTED IDENTICAL TO MPLT & MPLTX POLES, RESPECTIVELY, WITH THE EXCEPTION THAT THE FRONT LEG POLE SHALL BE TERMINATED AT A DISTANCE OF 20'-2" ABOVE THE BOTTOM OF THE BASE PLATE. THE FRONT POLE SHALL BE CAPPED AT THAT LOCATION IN THE SAME MANNER AS DETAILED FOR THE OTHER POLE TYPES IN THESE PLANS.

POLES

THE UPPER SECTION JOINT SHALL BE COMPLETED IN THE SHOP.

THE LOWER SECTION JOINT SHALL BE ASSEMBLED IN THE FIELD; HOWEVER, THE FIT AND PLUMBNESS OF JOINT SHALL BE CHECKED IN THE SHOP.

ALL ROUND STEEL PIPE SHALL CONFORM TO ASTM A53, GRADE B, TYPE E OR S. ALL SQUARE STEEL TUBING SHALL CONFORM TO ASTM A500, GRADE B. STEEL FILL PIPES SHALL BE COLD FORMED FROM A-36 STEEL PLATE OR SHALL BE MACHINED FROM ROUND PIPE MEETING THE ABOVE REQUIREMENTS. ALL OTHER STEEL PLATES AND BARS SHALL CONFORM TO ASTM A36, UNLESS OTHERWISE NOTED.

ANCHOR BOLTS, NUTS AND WASHERS SHALL BE PROVIDED W/ THE POLE. ANCHOR BOLTS SHALL CONFORM TO ASTM A36; NUTS SHALL CONFORM TO ASTM A563, GRADE A, HEAVY HEX; WASHERS SHALL CONFORM TO ASTM F436. ANCHOR BOLTS, NUTS AND WASHERS SHALL BE HOT DIP GALVANIZED IN ACCORDANCE WITH ASTM A153. TWO NUTS AND ONE WASHER SHALL BE PROVIDED PER ANCHOR BOLT. ANCHOR BOLTS SHALL BE SWEDGED. GALVANIZED PORTION OF ANCHOR BOLT THAT WILL BE EMBEDDED IN CONCRETE SHALL BE GIVEN A CHROMATE TREATMENT.

HARDWARE, NUTS AND SCREWS FOR POLE CAPS AND HANDHOLE COVERS SHALL BE 18-8 STAINLESS STEEL.

BOOM CONNECTION PLATE

FOR MPLT AND MPLTX TYPE POLES ONLY.

BOOM CONNECTION PLATE SHALL BE FURNISHED WITH MPLT & MPLTX TYPE POLES.

SEE STANDARD DRAWING ES-8-10 FOR BOOM DETAILS. BOOM CONNECTION WILL BE MODIFIED FROM STANDARD DRAWING ES-8-10 AS DETAILED IN THESE PLANS TO ACCOUNT FOR THE REDUCED DIAMETER OF THE POLE.

BOLTS FOR BOOM ATTACHMENT SHALL CONFORM TO ASTM A325; NUTS SHALL CONFORM TO ASTM A563, GRADE DH, HEAVY HEX; WASHERS SHALL CONFORM TO ASTM F436. THESE ITEMS SHALL BE SUPPLIED WITH THE POLE. BOOM ATTACHMENT BOLTS, NUTS, AND WASHERS SHALL BE HOT DIP GALVANIZED IN ACCORDANCE WITH ASTM A153.

BANNER CONNECTIONS

FOR MPL TYPE POLE ONLY.

BANNER CONNECTIONS (BOTH TOP & BOTTOM) SHALL BE FURNISHED WITH MPL TYPE POLE.

TOP BANNER BRACKET IS FIXED. BOTTOM BANNER BRACKET IS ADJUSTABLE.

BANNER ATTACHMENT BOLTS AND NUTS SHALL BE HOT DIP GALVANIZED IN ACCORDANCE WITH ASTM A153.

PAINTING

ALL CARBON STEEL MATERIAL SHALL BE SHOP PAINTED AS FOLLOWS:

A. EXTERIOR – ONE COAT OF IRON OXIDE PRIMER.
B. INTERIOR – ONE COAT OF SOYA-ALKYD PRIMER WITH AT LEAST 60% BY WEIGHT BEING ZINC DUST PIGMENT OR OTHER APPROVED PRIMER.

WELDING

ALL WELDING SHALL CONFORM TO THE LATEST EDITION OF THE AMERICAN WELDING SOCIETY'S "STRUCTURAL WELDING CODE."

CP DENOTES COMPLETE PENETRATION WELD. THESE WELDS SHALL BE GROUND FLUSH WITH ADJACENT SURFACE UNLESS OTHERWISE PERMITTED BY THE ENGINEER.

STEEL ANCHOR BASE POLES–PHYSICAL PROPERTIES

CITY OF CINCINNATI DESIGN NO.	PIPE SHAFT DIMENSION (INCHES)									ANCHOR BASE (IN)		BASE PLATE DIMENSIONS (IN)			
	LOWER SECTION					MIDDLE SECTION		TOP SECTION							
	FORE LEG		REAR LEGS		CONN. TUBES	PIPE O.D.	WALL THICKNESS	PIPE O.D.	WALL THICKNESS	* BOLT SIZE & LENGTH	BOLT CIRCLE	BOLT FLAT	BOLT HOLE DIAM.	PLATE SIZE	PLATE THICK
	PIPE O.D.	WALL THICK.	PIPE O.D.	WALL THICK.											
MPL/MPLT	8 5/8	0.322	4 1/2	.237	4 x 4 x 1/4	6 5/8	0.280	5 9/16	0.258	2 x 90	22	15 9/16	2 3/8	36 x 30	2
MPLTX	8 5/8	0.500	4 1/2	.674	4 x 4 x 3/8	6 5/8	0.432	5 9/16	0.375	2 1/4x96	22	15 9/16	2 5/8	36 x 30	2 1/2

* LENGTH INCLUDES 6" HOOK AT BOTTOM OF BOLT

STATE OF OHIO
STEVEN GERALD BAILEY
49331
REGISTERED
PROFESSIONAL ENGINEER

MPL / MOL –T SYSTEMS (ES–8)

MPL, MPLT, MPLTX, MPT & MPTX TYPE LIGHTING & TRAFFIC POLES

CITY OF CINCINNATI
DEPT. OF TRANSPORTATION & ENGINEERING
DIV. OF TRAFFIC ENGR.

APPROVED Steve Bailey DATE 3-4-99

S.C.H.	Steve Bailey	9/21/04	UPDATE				
DESIGN	REVISION APPROVED	DATE	WO#	SCALE	SOURCE	DRAWN	FILE NO.
ENG/TE		4–15–93		N.T.S.		TKG/MLP	ES–8–14

FED. RD. DIV.	STATE	PROJECT	FISCAL YEAR
5	OHIO		

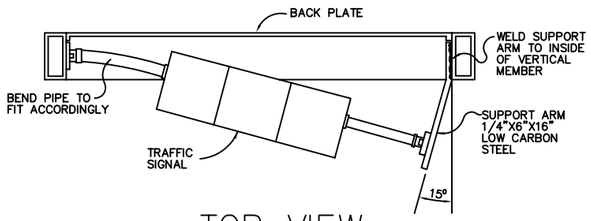

TOP VIEW

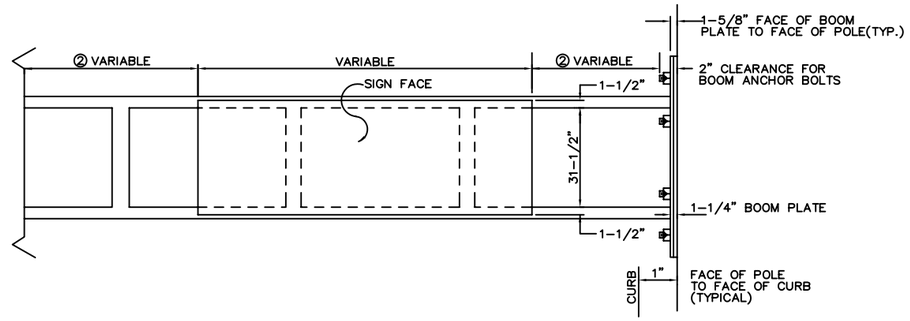

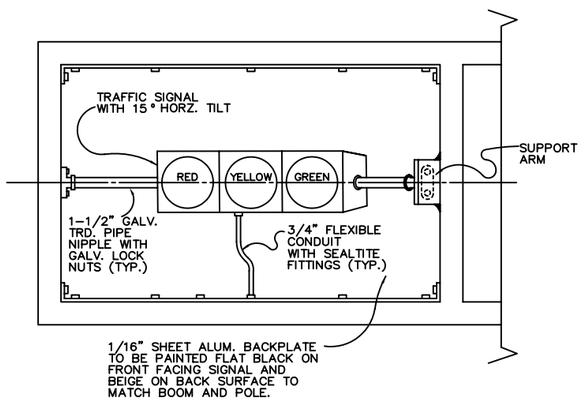

SPECIAL TRAFFIC SIGNAL MOUNTING

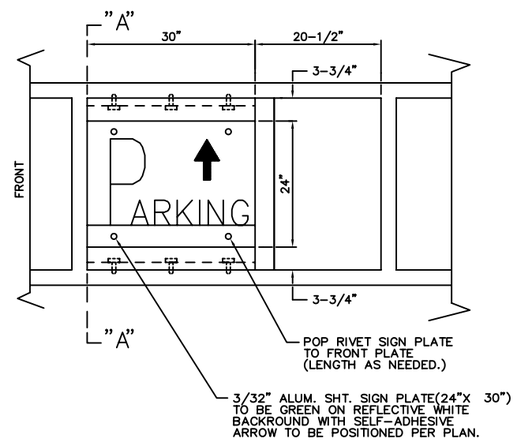

REFLECTORIZED SIGN MOUNTING

1. SIGN TO BE SECURELY FASTENED TO VERTICAL PLUS HORIZONTAL MEMBER(S) OF BOOM BY POP-RIVETING OR OTHER SUITABLE MEANS.
2. THE VARIABLE LATERAL POSITIONING OF THE SIGN IS TO BE DETERMINED BY THE DESIGN PLAN OR TRAFFIC ENGINEER.
3. PAINT THE REAR SURFACE OF THE SIGN BEIGE TO MATCH BOOM AND POLE.

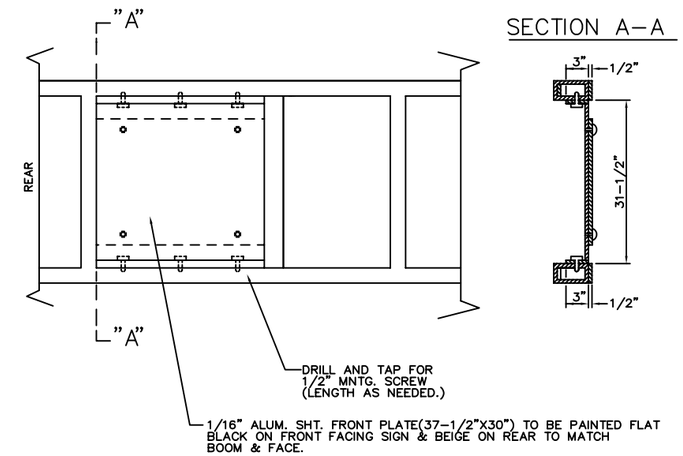

REFLECTORIZED SIGN MOUNTING

1. SIGN TO BE POSTIONED TO EITHER RIGHT OR LEFT SIDE OF BOOM OPENING PER PLAN.
2. RECESS SIGN ASSEMBLY 1/2" FROM FRONT SIDE OF BOOM.

NOTES:

1. FABRICATE SUPPORT ARM AND BEND PIPE TO INSURE A 15° HORIZONTAL TILT FOR TRAFFIC SIGNAL.
2. RED LENS IS ALWAYS TO THE LEFT.
3. PAINT ALL SUPPORT AND MOUNTING HARDWARE AND SIGNAL HOUSING FLAT BLACK, EXCEPT DOORS TO SIGNAL SECTIONS WHICH ARE TO BE FEDERAL YELLOW.

STATE OF OHIO
STEVEN GERALD BAILEY
49331
REGISTERED
PROFESSIONAL ENGINEER

S.C.H.	Steve Bailey	9/20/04	UPDATE

MPL / MOL -T SYSTEMS (ES-8)

SPECIAL TRAFFIC SIGNAL & SIGN ARRANGEMENT DETAILS FOR TRAFFIC BOOMS

CITY OF CINCINNATI
DEPART. OF TRANSPORTATION & ENGINEERING
DIV. OF TRAFFIC ENGINEERING

APPROVED Steve Bailey DATE 3-4-99

DESIGN	REVISION APPROVED	DATE	WO #	SCALE	SOURCE	DRAWN	FILE NO.
R.P.S.		3/24/89			REPLACES ES-8-13 11/2/83	B.C.P.	ES-8-13

FED. RD. DIV.	STATE	PROJECT	FISCAL YEAR
5	OHIO		

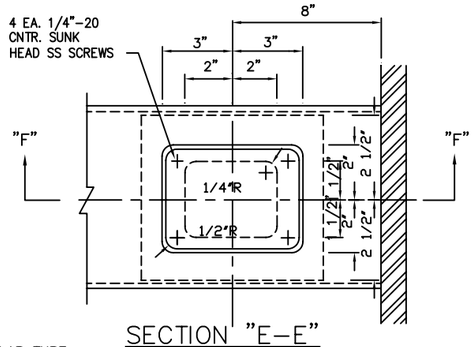

SECTION "E-E"

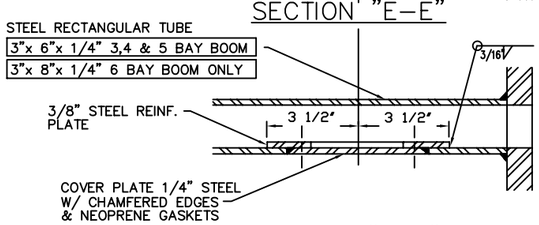

SECTION "F-F"

BOOM HANDHOLE DETAIL

2 EACH REQUIRED, ONE FOR EACH END BAY
(SEE SHEET ES-8-12A FOR SECTION LOCATIONS)

CONTINUOUS BOOMS – 30' TO 50' LONG

POLE TYPE – MOT OR MOLT

BOOM PLATE – 48" LONG x $9\frac{3}{4}$" WIDE x 1" THICK

BOOM MEMBERS – 8" DEEP x 3" WIDE x $\frac{1}{4}$" THICK

BOOM LENGTH (INCLUDING BOOM ATTACHMENT PLATES)		STANDARD BAYS (INCLUDING 2 END BAYS W/BOOM ATTACH. PLATES)		IRREGULAR BAYS			
TOTAL FEET	TOTAL INCHES	NO. OF BAYS	TOTAL LENGTH IN INCHES	AVAILABLE LENGTH INCHES	LEFT	CENTER	RIGHT
30	360	6	324	36	–	3'–0"	–
31	372	6	324	48	–	4'–0"	–
32	384	6	324	60	–	5'–0"	–
33	396	6	324	72	3'–0"	–	3'–0"
34	408	6	324	84	3'–6"	–	3'–6"
35	420	6	324	96	4'–0"	–	4"–0"
36	432	6	324	108	4'–6"	–	4'–6"
37	444	6	324	120	5'–0"	–	5'–0"
38	456	6	324	132	4'–0"	3'–0"	4'–0"
39	468	8	431	37	–	3'–1"	–
40	480	8	431	49	–	4'–1"	–
41	492	8	431	61	–	5'–1"	–
42	504	8	431	73	3'–0.5"	–	3'–0.5"
43	516	8	431	85	3'–6.5"	–	3'–6.5"
44	528	8	431	97	4'–0.5"	–	4'–0.5"
45	540	8	431	109	4'–6.5"	–	4'–6.5"
46	552	8	431	121	5'–0.5"	–	5'–0.5"
47	564	8	431	133	4'–0.5"	3'–0"	4'–0.5"
48	576	10	538	38	–	3'–2"	–
49	588	10	538	50	–	4'–2"	–
50	600	10	538	62	–	5'–2"	–

J

CONTINUOUS BOOMS – 51' TO 60' LONG

POLE TYPE – MOT OR MOLT

BOOM PLATE – 48" LONG x $9\frac{3}{4}$" WIDE x 1" THICK

BOOM MEMBERS – 8" DEEP x 3" WIDE x $\frac{3}{8}$" THICK

BOOM LENGTH (INCLUDING BOOM ATTACHMENT PLATES)		STANDARD BAYS (INCLUDING 2 END BAYS W/BOOM ATTACH. PLATES)		IRREGULAR BAYS			
TOTAL FEET	TOTAL INCHES	NO. OF BAYS	TOTAL LENGTH IN INCHES	AVAILABLE LENGTH INCHES	LEFT	CENTER	RIGHT
51	612	10	538	74	3'–1"	–	3'–1"
52	624	10	538	86	3'–7"	–	3'–7"
53	636	10	538	98	4'–1"	–	4'–1"
54	648	10	538	110	4'–7"	–	4'–7"
55	660	10	538	122	5'–1"	–	5'–1"
56	672	10	538	134	4'–1"	3'–0"	4'–1"
57	684	12	645	39	–	3'–3"	–
58	696	12	645	51	–	4'–3"	–
59	708	12	645	63	–	5'–3"	–
60	720	12	645	75	3'–1.5"	–	3'–1.5"

K

CONTINUOUS BOOMS – 61' TO 70' LONG

POLE TYPE – MOTX OR MOLTX

BOOM PLATE – 48" LONG x 11" WIDE x 1" THICK

BOOM MEMBERS – 10" DEEP x 4" WIDE x $\frac{3}{8}$" THICK

BOOM LENGTH (INCLUDING BOOM ATTACHMENT PLATES)		STANDARD BAYS (INCLUDING 2 END BAYS W/BOOM ATTACH. PLATES)		IRREGULAR BAYS			
TOTAL FEET	TOTAL INCHES	NO. OF BAYS	TOTAL LENGTH IN INCHES	AVAILABLE LENGTH INCHES	LEFT	CENTER	RIGHT
61	732	12	656	76	3'–2"	–	3'–2"
62	744	12	656	88	3'–8"	–	3'–8"
63	756	12	656	100	4'–2"	–	4'–2"
64	768	12	656	112	4'–8"	–	4'–8"
65	780	12	656	124	5'–2"	–	5'–2"
66	792	12	656	136	4'–2"	3'–0"	4'–2"
67	804	14	765	39	–	3'–3"	–
68	816	14	765	51	–	4'–3"	–
69	828	14	765	63	–	5'–3"	–
70	840	14	765	75	3'–1.5"	–	3'–1.5"

L

CONTINUOUS BOOMS – 71' TO 80' LONG

POLE TYPE – MOTX OR MOLTX

BOOM PLATE – 48" LONG x 13" WIDE x 1" THICK

BOOM MEMBERS – 12" DEEP x 4" WIDE x $\frac{3}{8}$" THICK

BOOM LENGTH (INCLUDING BOOM ATTACHMENT PLATES)		STANDARD BAYS (INCLUDING 2 END BAYS W/BOOM ATTACH. PLATES)		IRREGULAR BAYS			
TOTAL FEET	TOTAL INCHES	NO. OF BAYS	TOTAL LENGTH IN INCHES	AVAILABLE LENGTH INCHES	LEFT	CENTER	RIGHT
71	852	14	765	87	3'–7.5"	–	3'–7.5"
72	864	14	765	99	4'–1.5"	–	4'–1.5"
73	876	14	765	111	4'–7.5"	–	4'–7.5"
74	888	14	765	123	5'–1.5"	–	5'–1.5"
75	900	14	765	135	4'–1.5"	3'–0	4'–1.5"
76	912	16	874	38	–	3'–2"	–
77	924	16	874	50	–	4'–2"	–
78	936	16	874	62	–	5'–2"	–
79	948	16	874	74	3'–1"	–	3'–1"
80	960	16	874	86	3'–7"	–	3'–7"

M

NOTES

MATERIALS:

RECTANGULAR STEEL TUBING FOR HORIZONTAL AND VERTICAL BOOM MEMBERS SHALL CONFORM TO ASTM A500, GRADE B.
STEEL PLATES SHALL CONFORM TO ASTM A36.
BOLTS FOR BOOM ATTACHMENT SHALL CONFORM TO ASTM A325; NUTS SHALL CONFORM TO ASTM A563; GRADE DH, HEAVY HEX; WASHERS SHALL CONFORM TO ASTM F436.
ALL BOLTS, NUTS, & WASHERS DESCRIBED ABOVE SHALL BE HAT-DIPPED GALVANIZED IN ACCORDANCE WITH ASTM A153.
ALL HARDWATE, NUTS, & SCREWS FOR HANDHOLE COVERS SHALL BE 18-8 STAINLESS STEEL.

PAINTING:

ALL CARBON STEEL MATERIAL SHALL BE SHOP PAINTED AS FOLLOWS;

A.) EXTERIOR – ONE COAT OF IRON OXIDE PRIMER.
B.) INTERIOR – ONE COAT OF IRON OXIDE PRIMER.

WELDING:

ALL WELDING SHALL CONFORM TO THE LATEST EDITION OF THE AMERICAN WELDING SOCIETY'S "STRUCTURAL WELDING CODE."
CP DENOTES COMPLETE PENETRATION WELD. THESE WELDS SHALL BE GROUND FLUSH WITH ADJACENT SURFACES UNLESS OTHERWISE PERMITTED BY THE ENGINEER.
DETAILS OF WELDED BOOM FIELD SPLICE, IF REQUIRED, SHALL BE SUBMITTED TO THE ENGINEER FOR APPROVAL PRIOR TO ERECTION OF BOOM.

REFER TO STANDARD DRAWING ES-8-10 & ES-8-11 FOR ADDITIONAL NOTES AND DETAILS.

STATE OF OHIO
STEVEN GERALD BAILEY 49331
REGISTERED
PROFESSIONAL ENGINEER

S.C.H.	Steve Bailey	9/17/04	UPDATE
T.E.		3/1/98	

DESIGN	REVISION / APPROVED	DATE	WO #
		08/19/96	

MPL / MOL -T SYSTEMS (ES-8)

CONTINUOUS TYPE
TRAFFIC BOOM CONTINUED

CITY OF CINCINNATI
DEPT. OF PUBLIC WORKS
DIV. OF TRAFFIC ENGR.

APPROVED Steve Bailey DATE 3-4-99

SCALE	SOURCE	DRAWN	FILE NO.
–		FJT	ES-8-12B

FED. RD. DIV.	STATE	PROJECT	FISCAL YEAR
5	OHIO		

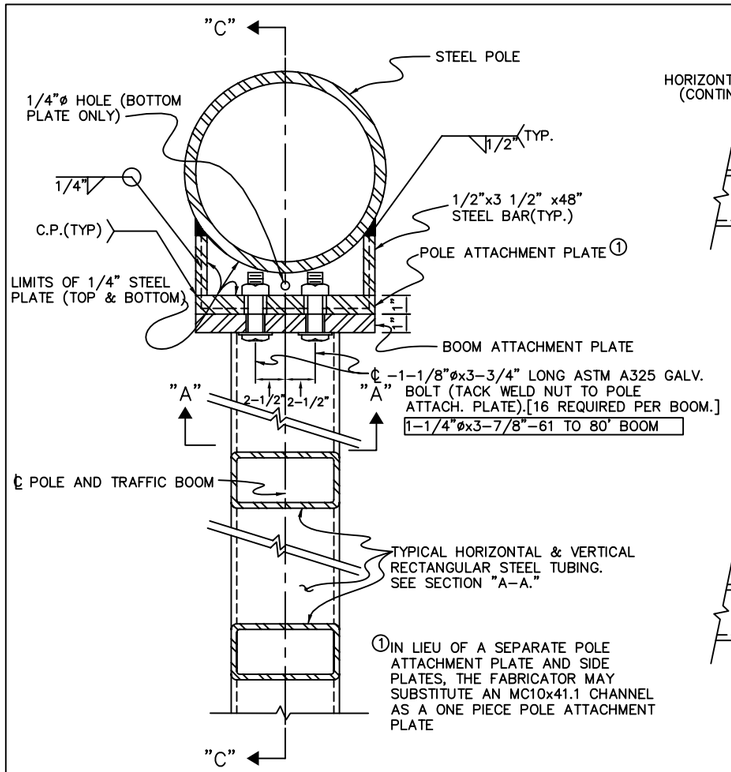

SECTION "B-B"

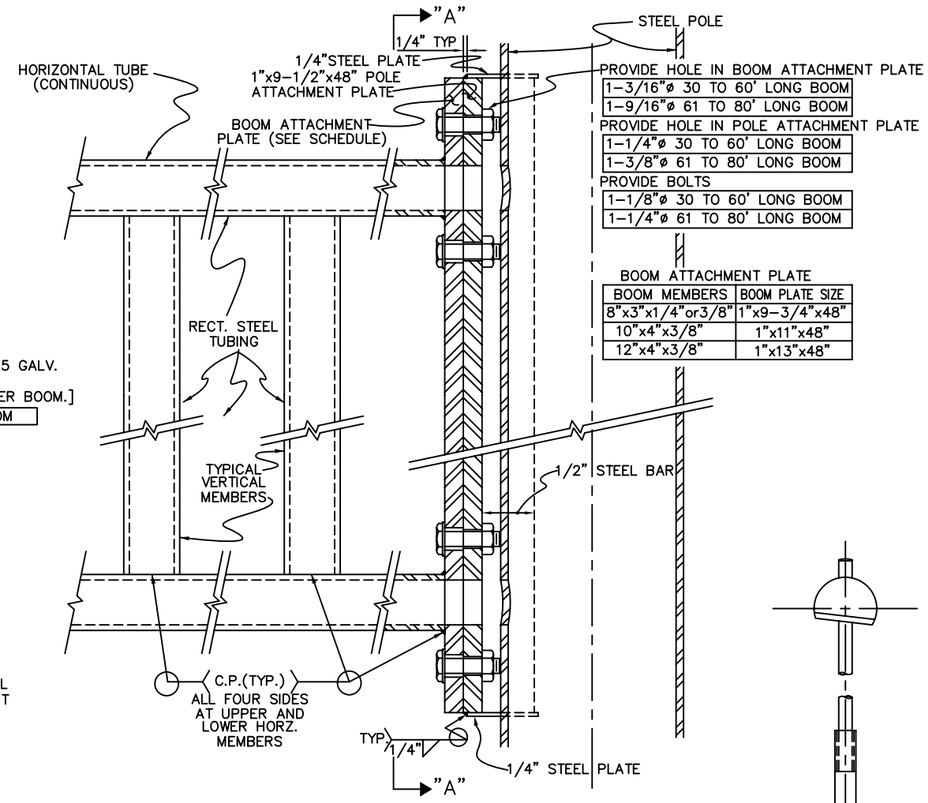

BOOM ATTACHMENT PLATE

BOOM MEMBERS	BOOM PLATE SIZE
8"x3"x1/4"or3/8"	1"x9-3/4"x48"
10"x4"x3/8"	1"x11"x48"
12"x4"x3/8"	1"x13"x48"

SECTION "C-C"

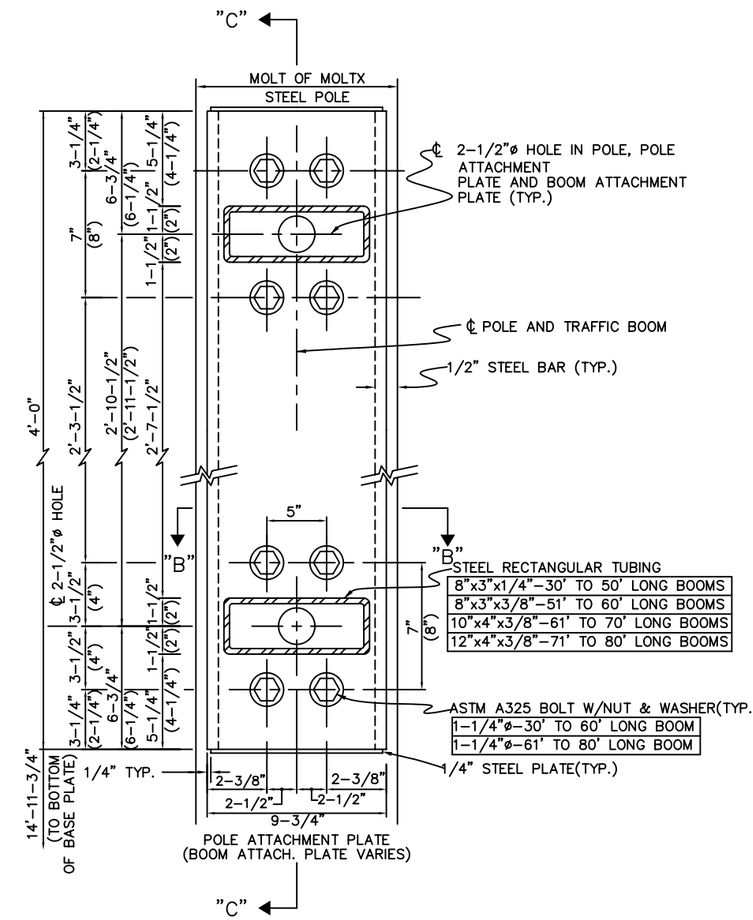

SECTION "A-A"

8"x3"x1/4" TUBING SHOWN DIMENSIONS IN PARENTHESIS ARE FOR 4" DEEP TUBE SECTIONS

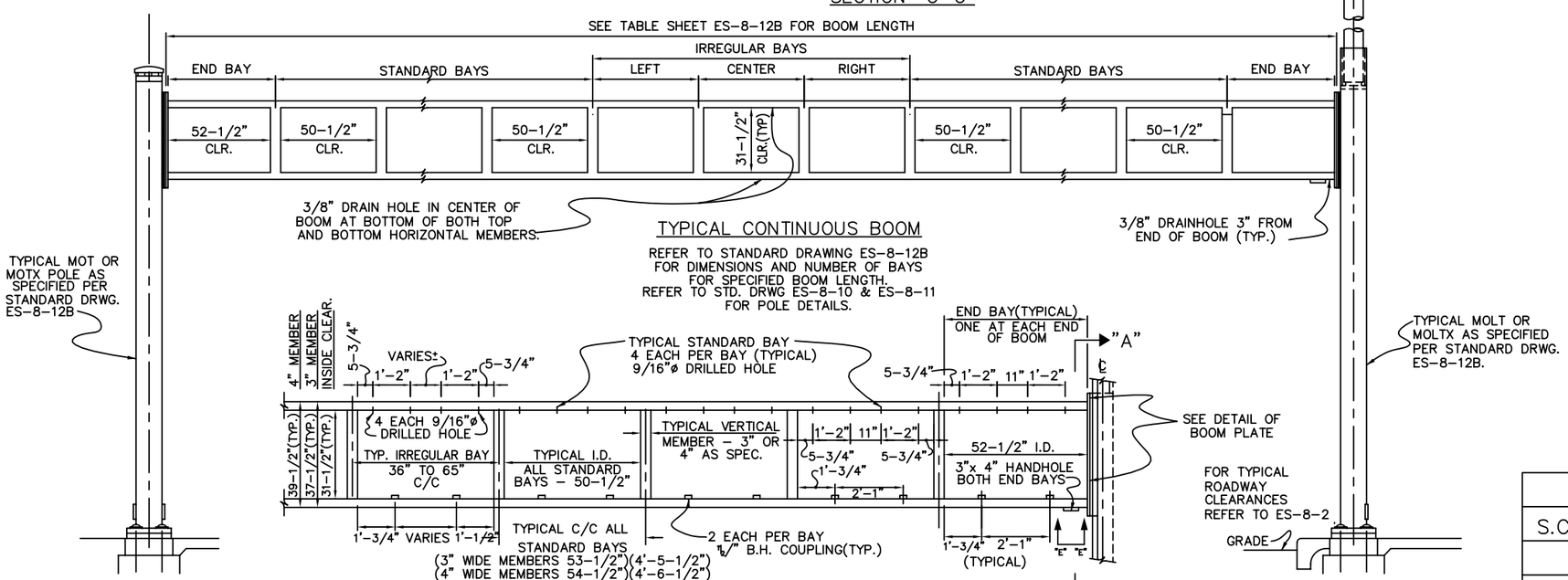

TYPICAL CONTINUOUS BOOM

REFER TO STANDARD DRAWING ES-8-12B FOR DIMENSIONS AND NUMBER OF BAYS FOR SPECIFIED BOOM LENGTH. REFER TO STD. DRWG ES-8-10 & ES-8-11 FOR POLE DETAILS.

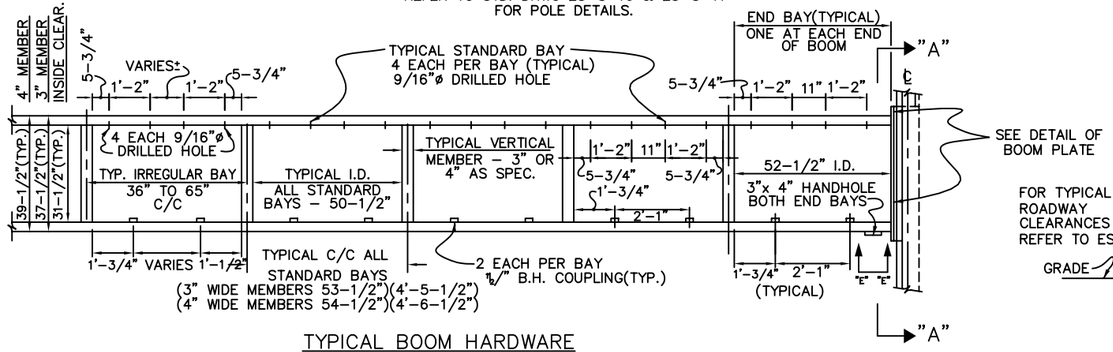

TYPICAL BOOM HARDWARE

STATE OF OHIO
STEVEN GERALD BAILEY
49331
REGISTERED
PROFESSIONAL ENGINEER

S.C.H.	Steve Bailey	9/17/04	UPDATE

DESIGN	REVISION	DATE	WO #
T.E.	APPROVED	3/1/98	

MPL / MOL -T SYSTEMS (ES-8)

CONTINUOUS TYPE TRAFFIC BOOM

CITY OF CINCINNATI
DEPT. OF PUBLIC WORKS
DIV. OF TRAFFIC ENGR.

APPROVED Steve Bailey DATE 3-4-99

SCALE	SOURCE	DRAWN	FILE NO.
			ES-8-12A

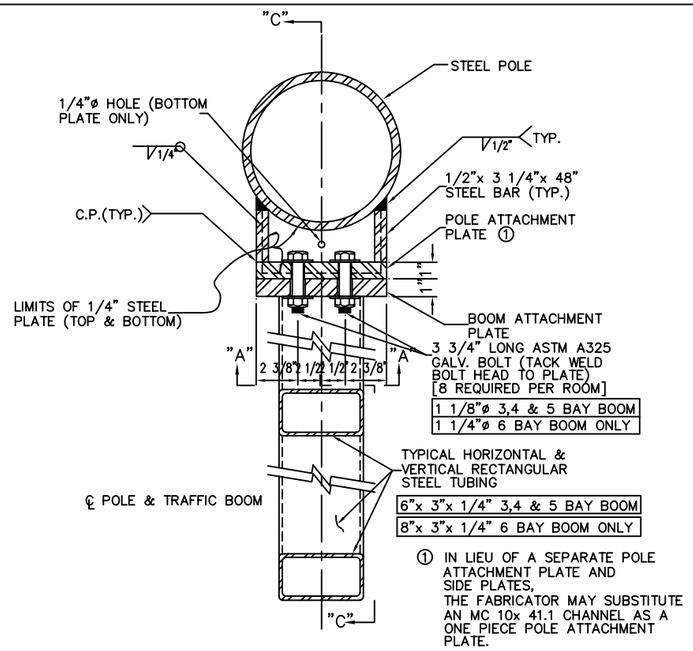

SECTION "B–B"

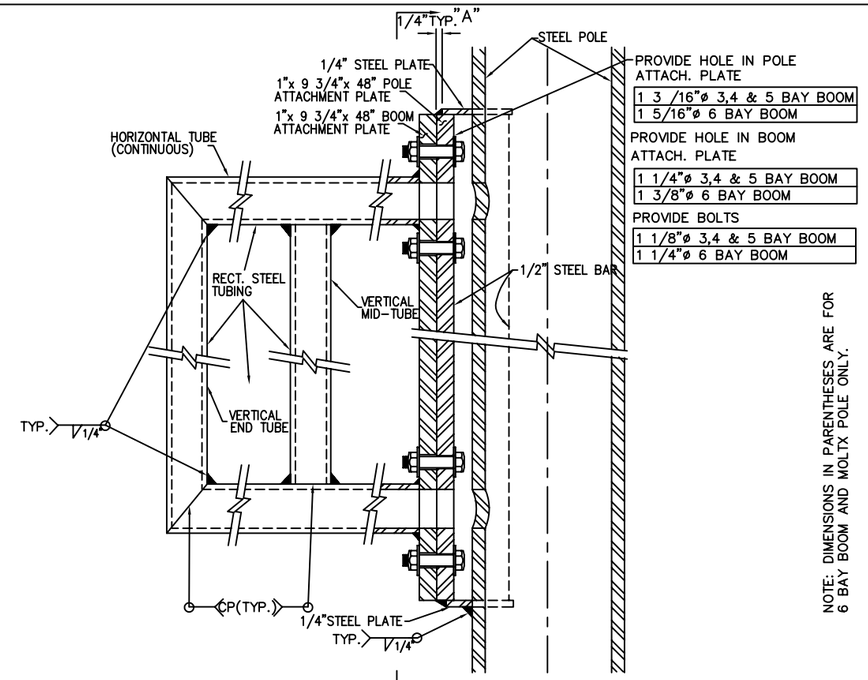

SECTION "C–C"

NOTE: DIMENSIONS IN PARENTHESES ARE FOR 6 BAY BOOM AND MOLTX POLE ONLY.

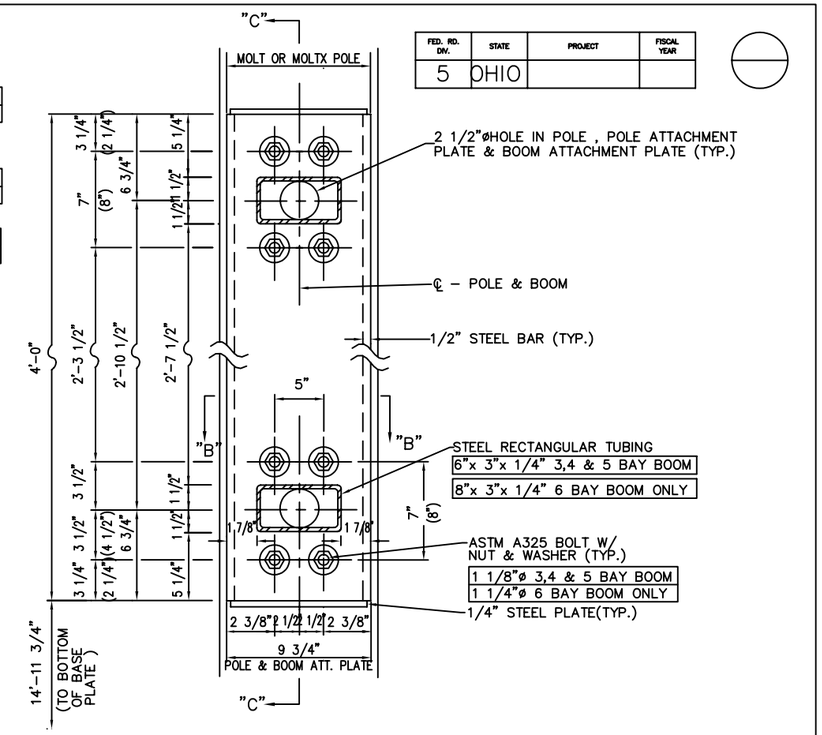

FED. RD. DIV.	STATE	PROJECT	FISCAL YEAR
5	OHIO		

SECTION "A–A"

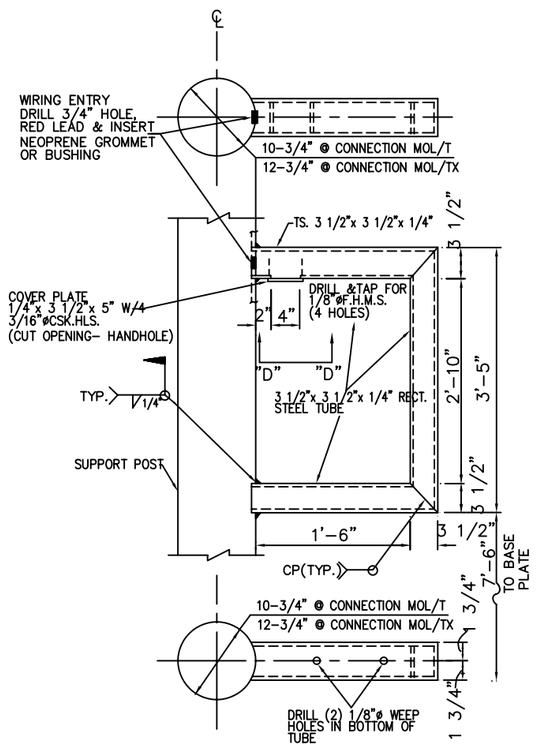

PEDESTRIAN SIGNAL BRACKET

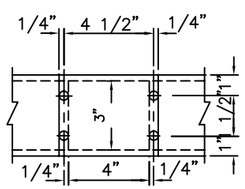

SECTION "D–D"

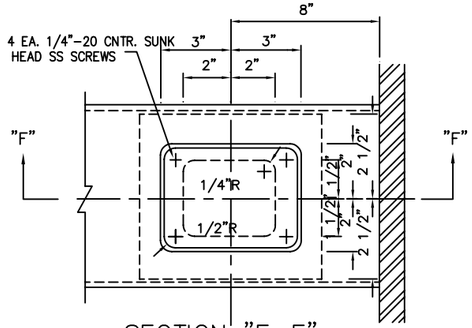

SECTION "E–E"

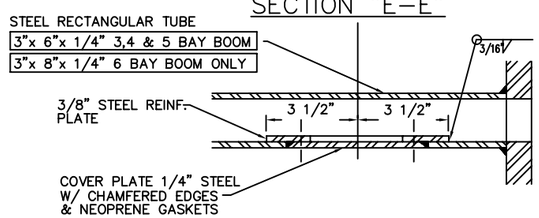

SECTION "F–F"

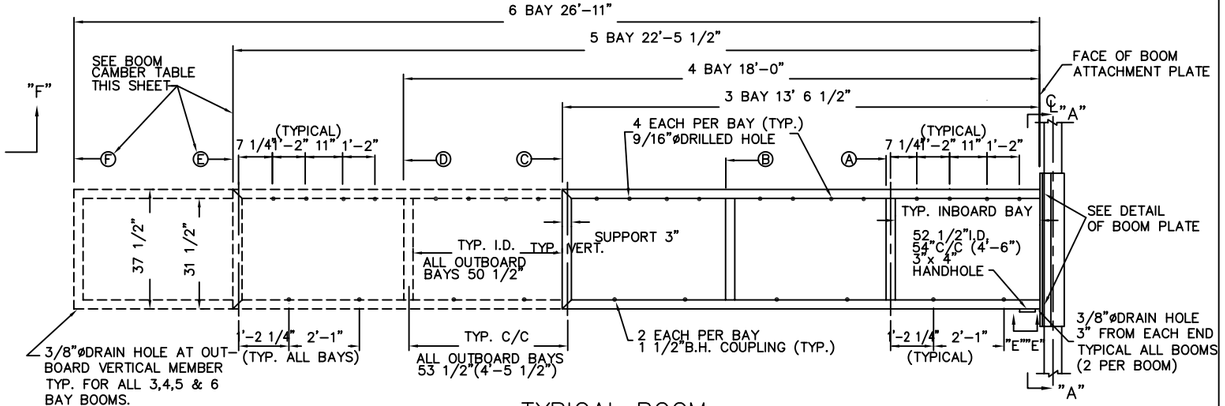

TYPICAL BOOM

NOTES

GRIND ALL WELDS ON VERTICAL SURFACES SMOOTH.
PAINTING: BOOMS SHALL BE SHOP PRIMED WITH ONE COAT OF EXTERIOR IRON OXIDE PRIMER
FOR ADDITIONAL NOTES & MATERIAL SPECIFICATIONS, SEE ES–8–10.

BOOM HANDHOLE DETAIL

BOOM CAMBER, IN.						
	A	B	C	D	E	F
6–BAY	3/16"	7/16"	5/8"	3/4"	15/16"	1 1/16"
5–BAY	3/16"	5/16"	7/16"	5/8"	3/4"	—
4–BAY	1/16"	3/16"	5/16"	7/16"	—	—

STATE OF OHIO
STEVEN GERALD BAILEY
49331
REGISTERED
PROFESSIONAL ENGINEER

S.C.H.	Steve Bailey	9/17/04	UPDATE
T.E.		3/1/98	

DESIGN	REVISION / APPROVED	DATE	WO #
		11/14/94	

MPL / MOL –T SYSTEMS (ES–8)

TRAFFIC BOOMS 3,4,5 & 6 BAY

CITY OF CINCINNATI
DEPT. OF PUBLIC WORKS
DIV. OF TRAFFIC ENGR.

APPROVED Steve Bailey DATE 3-4-99

SCALE	SOURCE	DRAWN	FILE NO.
–		VGRD	ES–8–11

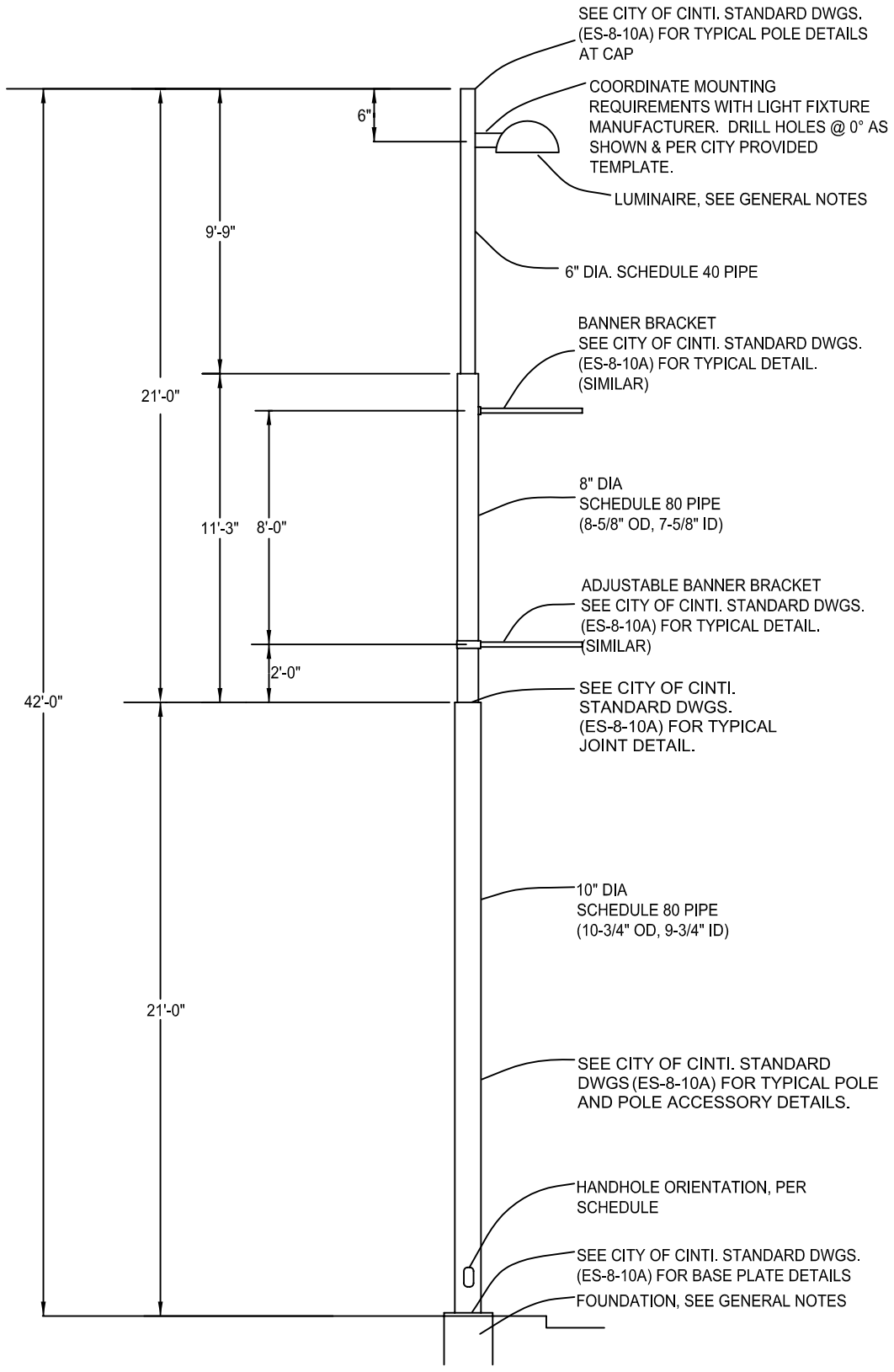

POLE TYPE C

MODIFIED CITY OF CINTI. "MOL" TYPE

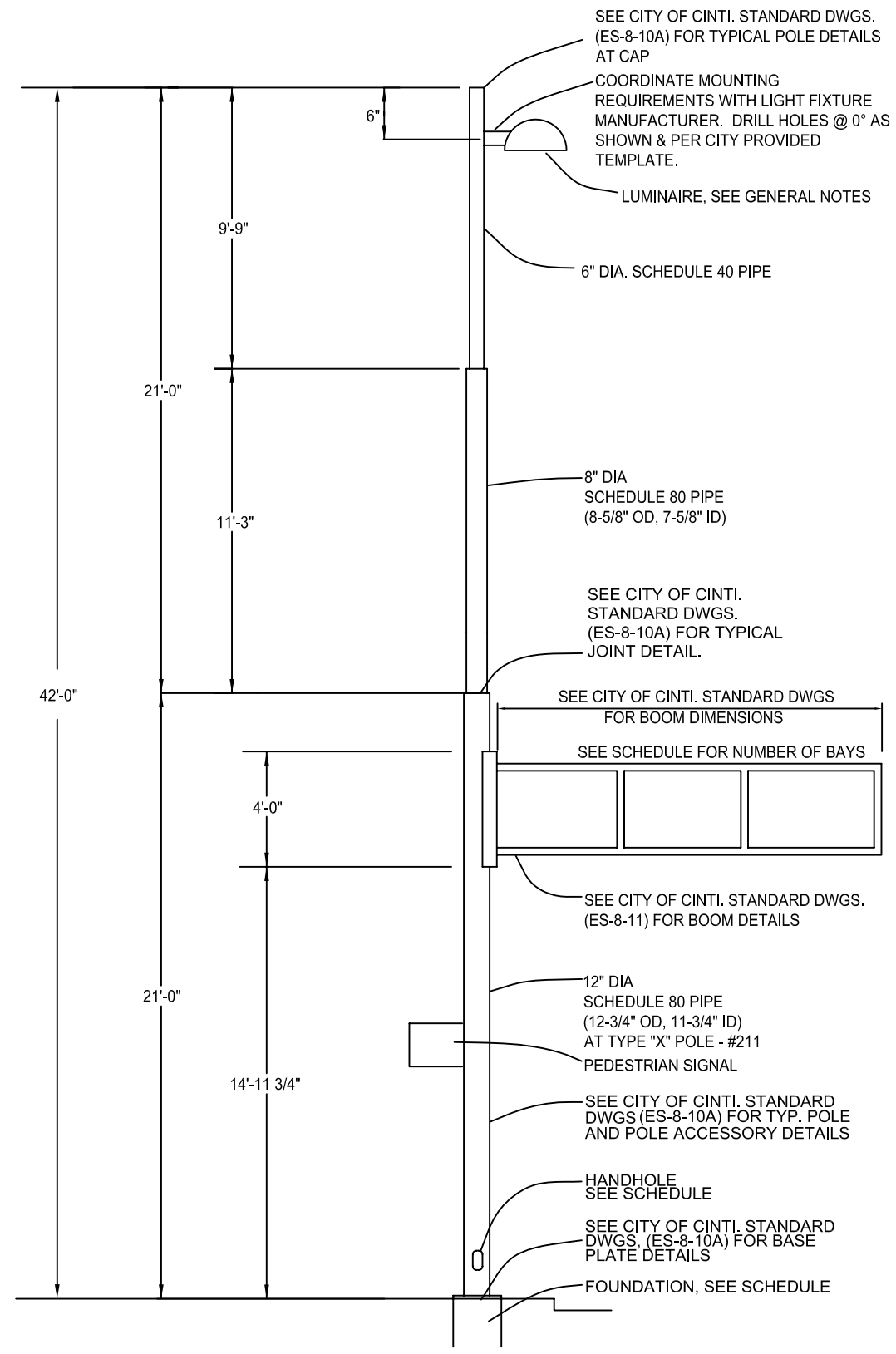

POLE TYPE B
(WITH PED. SIGNAL)

MODIFIED CITY OF CINTI. "MOLT X" TYPE

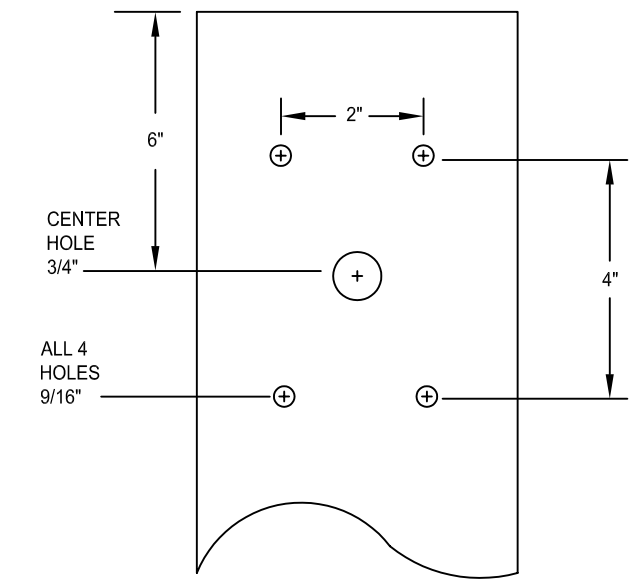

SPAULDING FIXTURE
(400W & 750W MH)

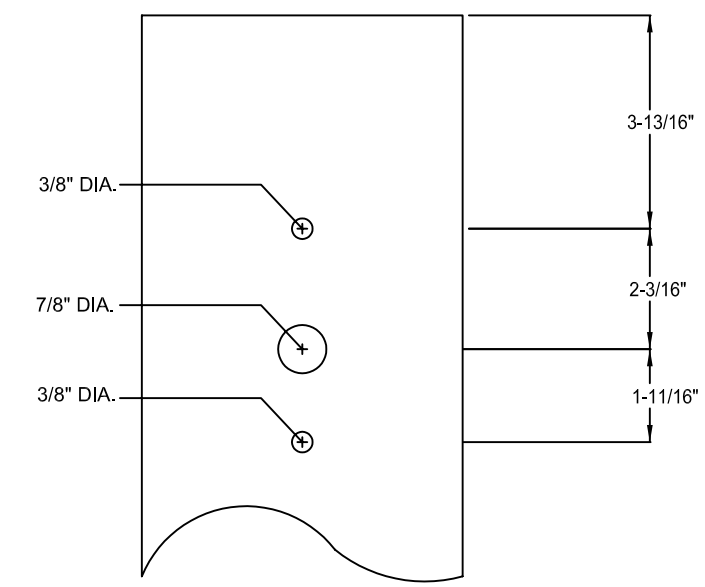

GUARDCO FIXTURE
(400W ONLY MH)

STATE OF OHIO
STEVEN GERALD BAILEY
49331
REGISTERED
PROFESSIONAL ENGINEER

MPL / MOL –T SYSTEMS (ES–8)

MOLX TYPE
LIGHTING & TRAFFIC STRAIN POLES

CITY OF CINCINNATI
DEPT. OF TRANSPORTATION AND ENGINEERING
DIV. OF TRAFFIC ENGINEERING

APPROVED Steve Bailey DATE 07/01/04

S.C.H.	Steve Bailey	4/29/05	UPDATE				
DESIGN	REVISION APPROVED	DATE	W.O.#	SCALE	SOURCE	DRAWN	FILE NO.
TE		07/1/04		N.T.S.		C.T.	ES–8–10C

FED. RD. DIV.	STATE	PROJECT	FISCAL YEAR
5	OHIO		

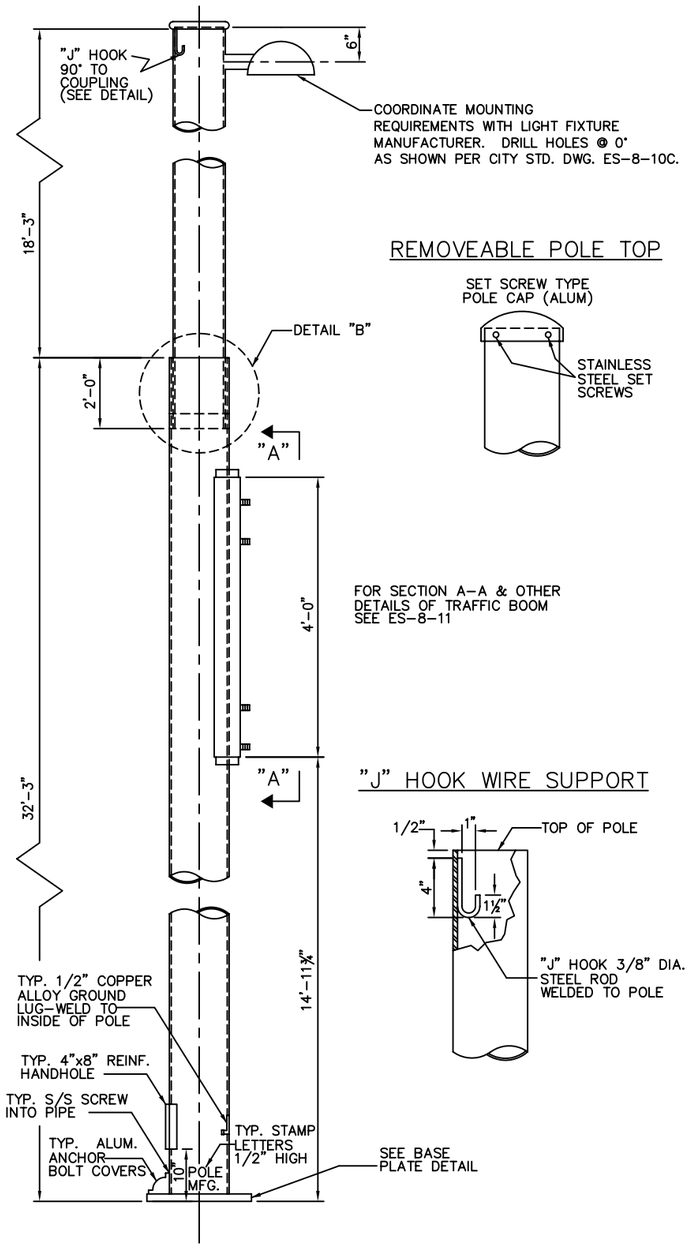

MOLX TOP

REMOVEABLE POLE TOP

"J" HOOK WIRE SUPPORT

BASE PLATE DETAIL

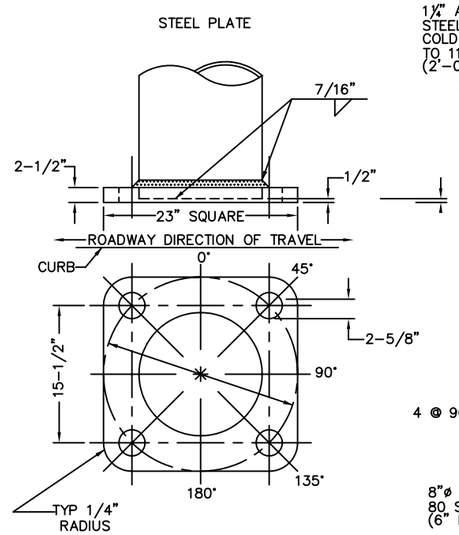

HANDHOLES

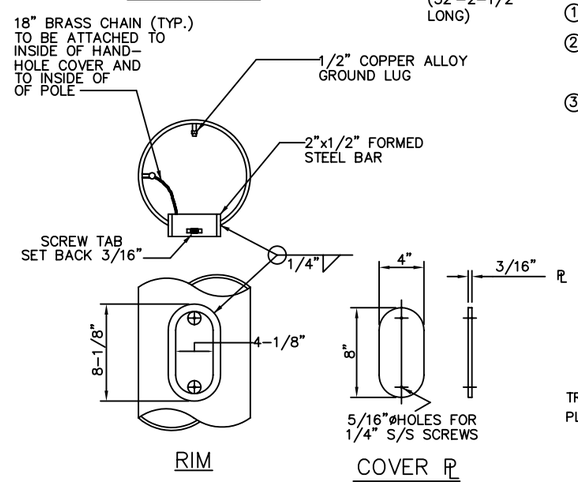

RIM

COVER PL

DETAIL "B"

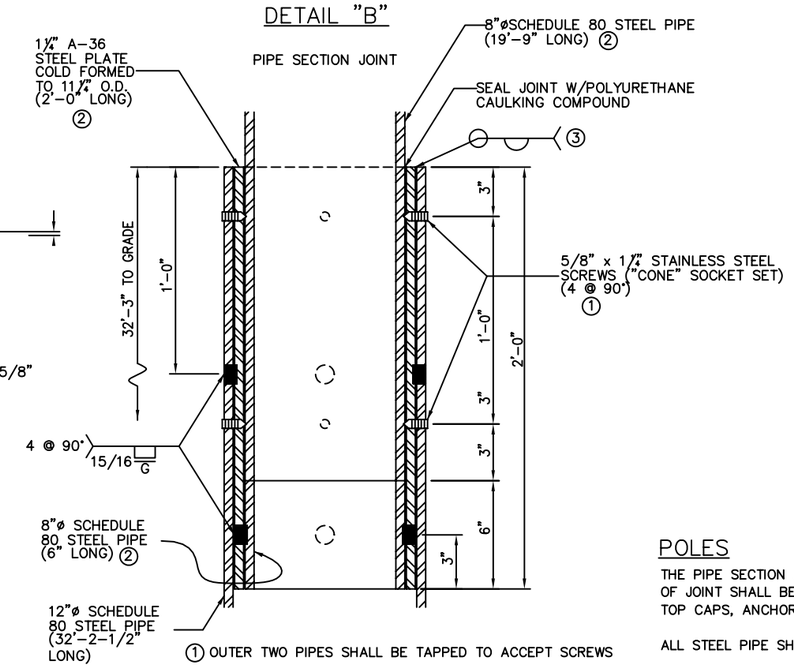

① OUTER TWO PIPES SHALL BE TAPPED TO ACCEPT SCREWS

② MACHINE O.D. OF PIPE AS REQUIRED FO PROPER FIT. (FIT SHALL BE CHECKED IN SHOP FOR EASE OF INSTALLATION & PLUMBNESS)

③ THESE WELDS SHALL BE MADE ONLY AFTER THE FABRICATOR VERIFIES THE PLUMBNESS OF THE POLES CONNECTED

ACCESSORY ORIENTATION

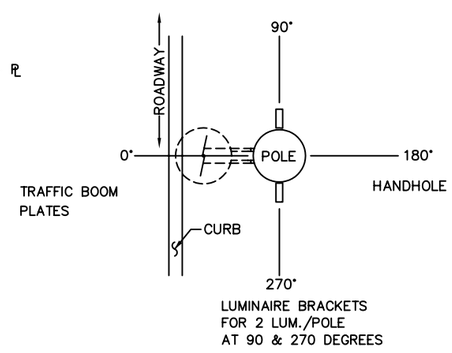

PLAN VIEW

ANCHOR BOLTS

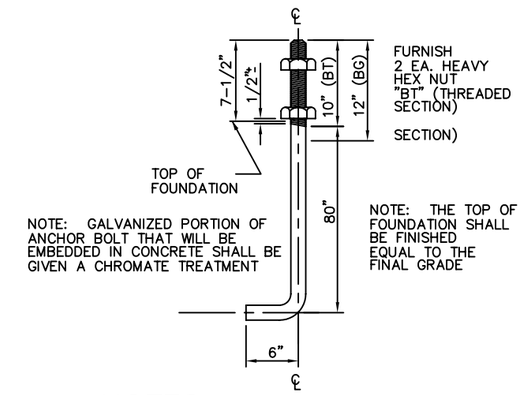

NOTES

POLES

THE PIPE SECTION JOINT SHALL BE ASSEMBLED IN THE FIELD; HOWEVER, THE FIT AND PLUMBNESS OF JOINT SHALL BE CHECKED IN THE SHOP. HARDWARE, NUTS AND SCREWS FOR ALUMINUM POLE TOP CAPS, ANCHOR BASE BOLT COVERS, AND HANDHOLE COVER SHALL BE 18-8 STAINLESS STEEL.

ALL STEEL PIPE SHALL CONFORM TO ASTM A53, GRADE B, TYPE E OR S, UNLESS OTHERWISE NOTED.

STEEL FILL PIPES SHALL BE COLD FORMED FROM A-36 STEEL PLATE. MISCELLANEOUS STEEL BARS AND PLATES SHALL CONFORM TO ASTM A36.

ANCHOR BOLTS SHALL CONFORM TO ASTM A36; NUTS SHALL CONFORM TO ASTM A563, GRADE A, HEAVY HEX; WASHERS SHALL CONFORM TO ASTM F436.

ALL BOLTS, NUTS AND WASHERS DESCRIBED ABOVE SHALL BE HOT DIP GALVANIZED IN ACCORDANCE WITH ASTM A153.

WHERE ALUMINUM WILL BE IN CONTACT WITH ANOTHER METAL AND/OR CONCRETE, CONTACT SURFACES SHALL BE THOROUGHLY COATED WITH AN ALUMINUM IMPREGNATED CAULKING COMPOUND.

PAINTING

ALL CARBON STEEL MATERIAL SHALL BE SHOP PAINTED AS FOLLOWS:

A. EXTERIOR – ONE COAT OF IRON OXIDE PRIMER.
B. INTERIOR – ONE COAT OF SOYA-ALKYD PRIMER WITH AT LEAST 60% BY WEIGHT BEING ZINC DUST PIGMENT OR OTHER APPROVED PRIMER.

WELDING

ALL WELDING SHALL CONFORM TO THE LATEST EDITION OF THE AMERICAN WELDING SOCIETY'S "STRUCTURAL WELDING CODE".
CP DENOTES COMPLETE PENETRATION WELD. THESE WELDS SHALL BE GROUND FLUSH WITH ADJACENT SURFACE UNLESS OTHERWISE PERMITTED BY THE ENGINEER.

STEEL ANCHOR BASE POLES-PHYSICAL PROPERTIES

* LENGTH INCLUDES 6" HOOK AT BOTTOM OF BOLT

CITY OF CINCINNATI DESIGN NO.	PIPE SHAFT DIMENSION (INCHES)				ANCHOR BASE (IN)		BASE PLATE DIMENSIONS (IN)			
	LOWER SECTION		TOP SECTION		* BOLT SIZE & LENGTH	BOLT CIRCLE	BOLT FLAT	BOLT HOLE	BASE SQUARE	BASE THICK
	BASE O.D.	WALL	PIPE O.D.	WALL		"B"	"F"	"H"	"S"	"T"
MOLX	12-3/4	0.688	8-5/8	0.500	2-1/4x96	22	15-1/2	2-5/8	23	2-1/2

STATE OF OHIO
STEVEN GERALD BAILEY
49331
REGISTERED
PROFESSIONAL ENGINEER

S.C.H.	Steve Bailey	9/16/04	UPDATE
T.E.		7/1/04	
T.E.		3/1/98	
DESIGN	REVISION	DATE	WO #
ENG/TE	APPROVED	10/7/91	

MPL / MOL -T SYSTEMS (ES-8)

MOLX TYPE
LIGHTING & TRAFFIC STRAIN POLES

CITY OF CINCINNATI
DEPT. OF TRANSPORTATION & ENGR.
DIV. OF TRAFFIC ENGR.

APPROVED Steve Bailey DATE 3-4-99

SCALE	SOURCE	DRAWN	FILE NO.
N.T.S.		M.L.P.	ES-8 -10B

FED. RD. REGION	STATE	PROJECT	FISCAL YEAR
5	OHIO		

TYPICAL MPL, MPLT & MPLTX POLE FOUNDATION

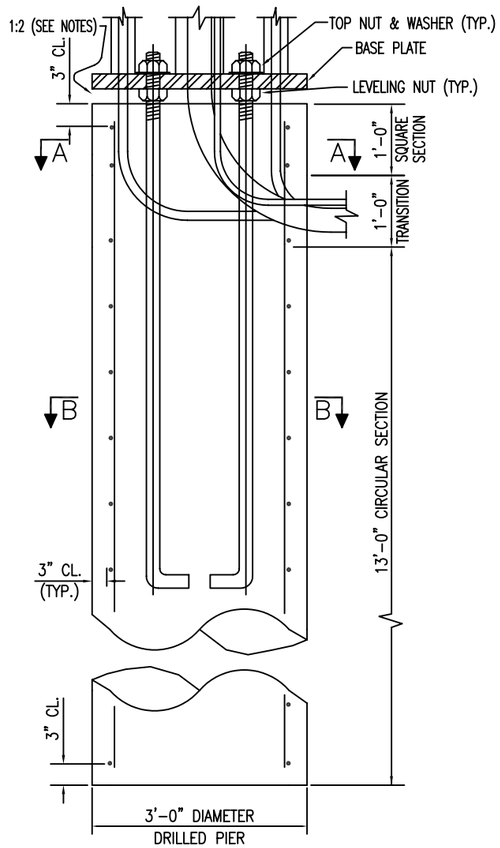

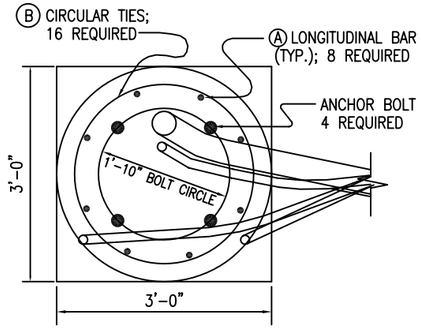

SECTION A–A

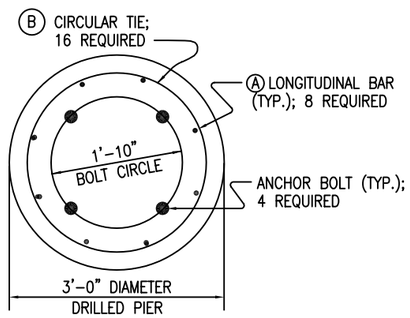

SECTION B–B

TYPICAL POLE FOUNDATION & PULLBOX PLAN

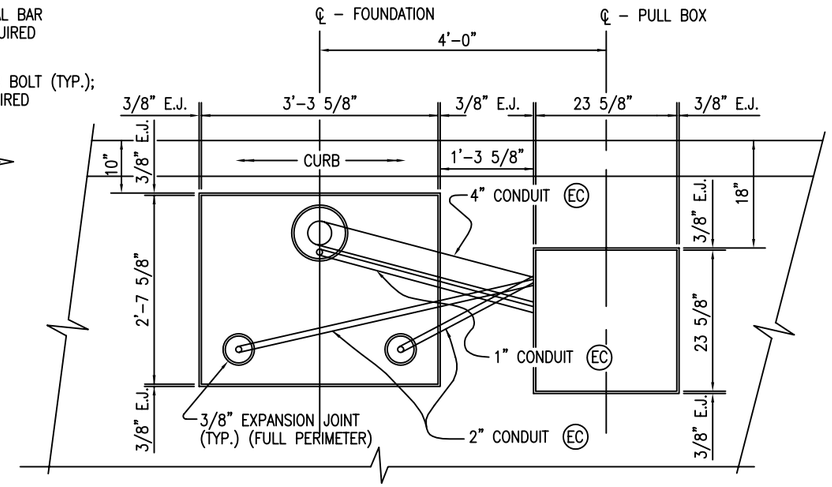

TOP VIEW

NOTE:

THIS IS THE ONLY BASE THAT FLEX DUCT MAY BE USED.

NOTE

FOR PULLBOXES IN AREAS REQUIRING DRAINS OR IN STREETS. SEE STD. DWG. ES–2–1 FOR DETAILS.

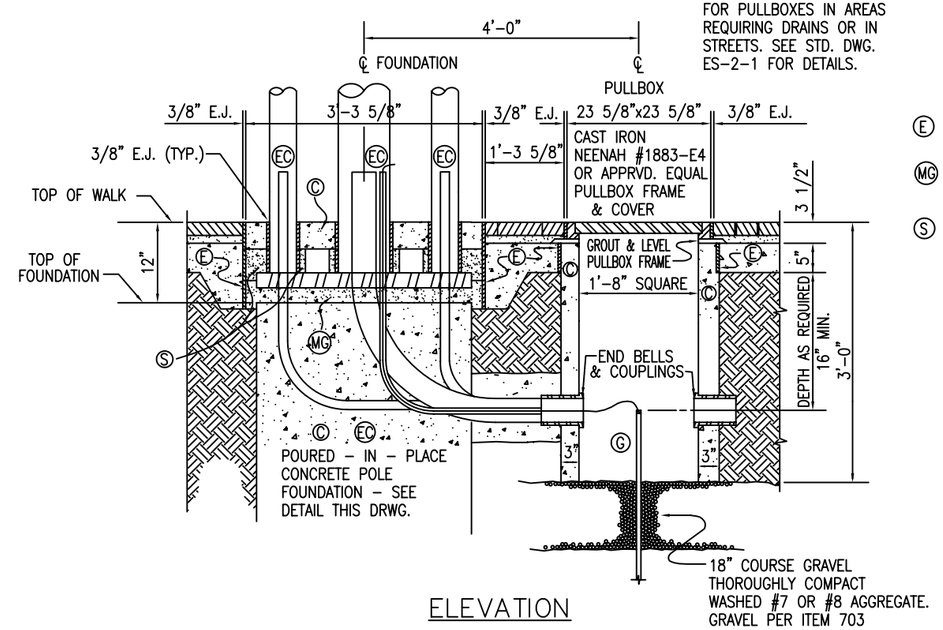

ELEVATION

GENERAL NOTES

(C) CONCRETE – CONCRETE SHALL BE CLASS "C"

DEPTH – FOUNDATION DEPTHS ARE FOR IN SITU SOILS RANGING FROM UNSATURATED SOFT CLAY TO SAND & GRAVEL – ADJUSTMENTS WILL BE REQUIRED AS DIRECTED BY THE ENGINEER IF EXCESSIVE FILL, UNUSUAL SOIL CONDITIONS OR VOIDS SUCH AS BASEMENTS ARE ENCOUNTERED.

(A) (B) REINFORCING STEEL – REBARS SHALL MEET THE REQUIREMENTS OF ODOT ITEM 709.01 (ASTM A615) AND SHALL BE DEFORMED AND PLAIN BILLET STEEL BARS FOR CONCRETE REINFORCEMENT. REBARS SHALL BE PLACED IN ACCORDANCE WITH ODOT ITEM 509.

ANCHOR BOLTS – NUTS, BOLTS & WASHERS SHALL BE FURNISHED BY THE POLE FABRICATOR. THE CONTRACTOR SHOULD SCHEDULE THE PROCUREMENT OF THESE ITEMS PRIOR TO THE FABRICATION OF THE POLES.

(EC) CONDUIT – PVC COATED CORRUGATED FLEXIBLE CONDUIT: 1–4" INCH FOR POWER, LIGHTING SIGNAL CABLE. RIGID SCHED. 40 PVC CONDUIT: 1–1" INCH FOR GROUND WIRE (SEE GROUND ROD), 2–2" FOR REAR LEGS.

(G) GROUND ROD – 1" INCH DIA. BY 10 FT. LONG COPPER COVERED STEEL. (BONDED COPPER TO STEEL) EXOTHERMICAL WELD A NO. 4 AWG. 600 VOLT INSULATED CABLE (RHH/RHW/USE)(OR TYPE UF) FROM GROUND ROD TO POLE GROUND LUG. ROUTE CABLE THRU A SEPARATE 1" FLEXIBLE CONDUIT.

(GX) WHERE PULLBOX IS LOCATED IN A BASEMENT AREA, INSTALL GROUND ROD BELOW FOUNDATION AND ROUTE GROUND WIRE THRU FOR TESTING SEE ODOT ITEM 625.19.

CURING AND LOADING – POLES MAY BE BOLTED ON FOUNDATIONS AFTER A MINIMUM OF 7 DAYS CURING. HOWEVER, POLES SHALL NOT BE LOADED WITH TRAFFIC BOOMS, SPAN WIRE AND EQUIPMENT WITH THE FOUNDATION CONCRETE LESS THAN 14 DAYS CURED.

(E) EXPANSION JOINT PREFORMED FILLER PER 705.03.

(MG) MORTAR GROUT – GROUT SHALL CONSIST OF 1 PART PORTLAND CEMENT AND 2 PARTS FINE SAND.

(S) SAND

USE OF LEVELING NUTS

ITEM 1.

a. TURN LEVELING NUT ON EACH BOLT
b. PLACE POLE IN POSITION ON LEVELING NUTS.
c. PLACE WASHERS AND TURN TOP NUTS INTO PLACE LOOSELY.
d. LEVEL POLE BY ADJUSTING BOTH UPPER & LOWER NUTS.

ITEM 2.

AFTER ALL PROPOSED EQUIPMENT AND MATERIALS WHICH WILL BE SUPPORTED BY THE POLE HAVE BEEN ATTACHED, THE LEVELING NUTS SHALL BE ADJUSTED SO THAT THE CENTER OF THE TOP OF THE MAIN POLE IS DIRECTLY ABOVE THE CENTER OF ITS BASE.

TYPICAL EXPANSION JOINT (E.J.)

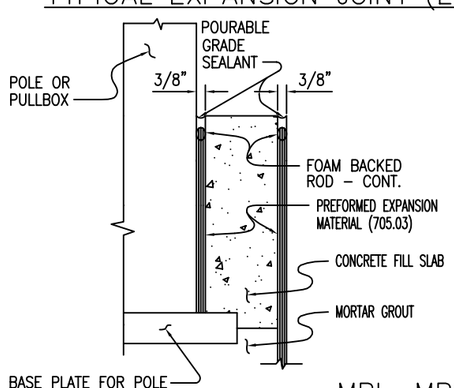

ANCHOR BOLTS

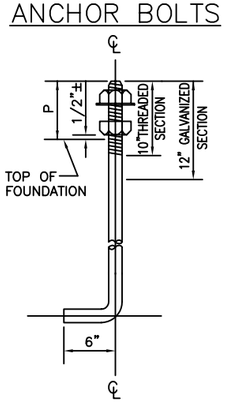

NOTE: CHECK ANCHOR BOLT AND NUTS FOR PROPER THREADING BEFORE SHIPPING.

MPL, MPLT & MPLTX POLE FOUNDATION SCHEDULE

* LENGTH INCLUDES 6" HOOK AT BOTTOM OF BOLT

POLE TYPE	ANCHOR BOLTS DIMENSIONS			FOUNDATION DIMENSIONS		REINFORCING STEEL							CONCRETE FOR POLE FOUNDATIONS
	* BOLT SIZE & LENGTH	BOLT CIRCLE	BOLT PROJ. "P"	DEPTH	WIDTH	"A" VERTICAL REBARS			"B" CIRCULAR TIE LOOPS				
	INCHES			FEET		NO.	SIZE	LENGTH	NO.	SIZE	INSIDE DIA.	LAP	CUBIC YARDS
MPL/MPLT	2 x 90	22	7 3/4	15	3	8	#8	14 1/2'	16	#4	2'–5"	1'–5"	4.03
MPLTX	2 1/4x96	22	8 5/8	15	3	8	#9	14 1/2'	16	#4	2'–5"	1'–5"	4.03

S.C.H.	Steve Bailey	9/24/04	UPDATE
M.K.		8/2/98	
DESIGN	REVISION APPROVED	DATE	WO#
ENG/TE		4–15–93	

STATE OF OHIO
STEVEN GERALD BAILEY
49331
REGISTERED
PROFESSIONAL ENGINEER

MPL /MOL –T SYSTEMS (ES–8)

MPL, MPLT, MPLTX, MPT & MPTX TYPE LIGHTING & TRAFFIC POLES

CITY OF CINCINNATI
DEPT. OF PUBLIC WORKS
DIV. OF TRAFFIC ENGR.

APPROVED Steve Bailey DATE 3–4–99

SCALE	SOURCE	DRAWN	FILE NO.
N.T.S.		MLP	ES – 8 – 18