FED. RD. DIV.	STATE	PROJECT	FISCAL YEAR
5	OHIO		

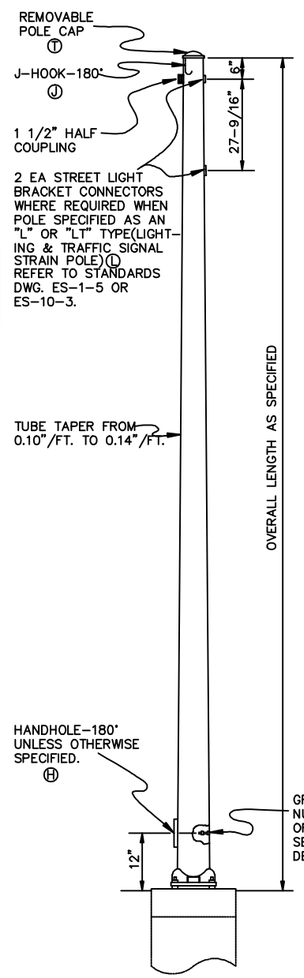

TYPICAL STEEL ANCHOR BASE PEDESTAL

(BREAKAWAY SUPPORT)

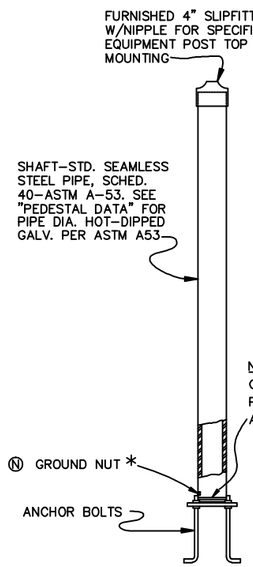

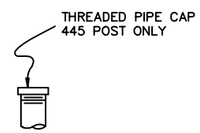

NPT THREADED OR CONTINUOUS WELD PIPE AND BASE PLATE, TOP AND BOTTOM. SEE ANCHOR BASE POLE DETAIL BELOW.

PEDESTAL PHYSICAL PROPERTIES

CITY OF CINTI. DESIGN NO.	HGT.	SHAFT SIZE	ANCHOR BOLTS
1045	10'	4" SCHED. 40 PIPE x 10'	3/4" x 30"
445	4'-6"	3" SCHED. 40 PIPE x 4'-6"	3/4" x 12"

PEDESTAL BASE DIMENSIONS

(SEE POLE BASE DETAIL)

DIMENSION	INCHES
"F"	6 3/4"
"H"	1"
"S"	11"
"T"	1" STEEL PLATE 711.01
"B" BOLT CIRCLE	9 1/2"

POLE CAPS

POLE CAPS SHALL BE MADE OF MALLEABLE STEEL OR CAST IRON. SET SCREWS, IF USED, SHALL BE STAINLESS STEEL.
CAPS SHALL BE OVER-SIZED TO PROVIDE SHAFT VENTILATION. (SEE DETAIL)

REMOVEABLE POLE TOP

ACCESSORY Ⓣ

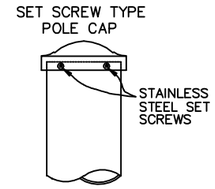

"J" HOOK WIRE SUPPORT

ACCESSORY Ⓙ

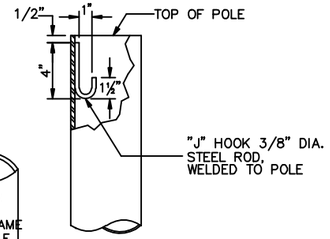

HAND HOLE Ⓗ/Ⓝ

INSIDE FRAME DIM. 4" WIDE BY 8" HIGH

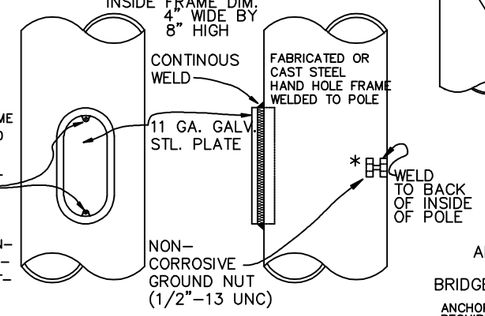

NOTE: PROVIDE A 12" #35 STAINLESS STEEL CAPTIVE CHAIN FASTENED TO COVER & FRAME

ALTERNATE GROUND NUT LOCATION MAY BE PROVIDED ON HANDHOLE FRAME (POLE INTERIOR) BUT SHALL NOT BE POSITIONED SO AS TO RESTRICT OR IMPEDE ACCESS TO POLE INTERIOR.

* WELD GROUND NUT TO INSIDE OF PIPE WHEN GROUND NUT IS TO BE LOCATED ON POST.

ANCHOR BOLTS

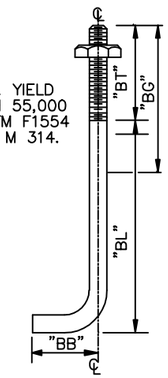

BOLT MIN. YIELD STRENGTH 55,000 P.S.I. ASTM F1554 /AASHTO M 314.

NOTE: GALVANIZING "BG" (THREAD LENGTH) + 1" TO 4". LEVELING NUTS, ANCHOR NUTS, & LEVELING SHIMS SHALL BE GALVANIZED PER ASTM A-153. ANCHOR BOLTS, ANCHOR NUTS, & LEVELING NUTS SHALL CONFORM TO ASTM A-563 GRADE A.

LEVELING SHIMS SHALL HAVE A MIN. 10,000 LB. BREAKING STRENGTH. ANCHOR BOLTS SHALL BE "L" SHAPED.

ANCHOR BOLT DIMENSIONS (INCHES)

BOLT SIZE	"BB"	"BL"	"BT"	"BG"
3/4" x 30"	4	20	6	8
1" x 40"	4	30	6	8
1-1/4"x48"	6	34	8	10
1-1/2"x60"	6	45	9	11
1-3/4"x90"	6	75	9	11
2" x 96"	6	80	10	12

ANCHOR BOLTS FOR BRIDGE MOUNTED POLES

ANCHOR BOLTS MUST MEET THE REQUIREMENTS HEREIN, EXEPT THE BOLTS SHALL BE "U" SHAPED AND MUST EXTEND INTO THE FIRST POUR OF THE STRUCTURE.

GENERAL NOTES

POLES SHALL BE FABRICATED OF STEEL MATERIAL AND SHALL CONFORM TO AASHTO "STANDARD SPECIFICATIONS FOR STRUCTURAL SUPPORTS FOR HIGHWAY SIGNS, LUMINAIRES AND TRAFFIC SIGNALS" EXCEPT THAT THE DESIGN WIND LOAD SHALL BE BASED ON 90 MILES PER HOUR.

1. MINIMUM YIELD STRENGTH FOR POLES AFTER FABRICATION & GALVANIZING SHALL BE 55,000 P.S.I.
2. SHAFT CONSTRUCTION SHALL MEET THE REQUIREMENTS OF O.D.-O.T. SPEC. 732.11.
   SHAFT TUBE SHALL BE CIRCULAR OR REGULAR POLYGONS WITH EIGHT (8) OR MORE EQUAL SIDES WITH ROUNDED CORNERS TO 1/8 INCH RADIUS. THE MINIMUM DIMENSION ACROSS THE FLATS OF A POLYGONAL POLE SHALL BE CONSIDERED THE DIAMETER OF THE POLE.
3. ACCESSORIES: ALL POLES SHALL BE FURNISHED WITH POLE CAP, "J" HOOK, HAND HOLE & ANCHOR BOLT COVERS. ENTRANCE FITTINGS SHALL BE SPECIFIED. GREY IRON CASTINGS SHALL CONFORM TO ASTM-A126 CLASS A. STEEL CASTINGS SHALL CONFORM TO ASTM A27 GRADE 65-25.
4. WELDING SHALL COMPLY WITH O.D.O.T. SPEC. 513.21 AND SHALL BE CONTINUOUS STRUCTURAL WELDS DEVELOPING THE FULL STRENGTH OF THE POLE.
5. POLE FINISH

   POLE FINISH SHALL BE ONE OF THE FOLLOWING. UNLESS OTHERWISE SPECIFIED POLES SHALL BE GALVANIZED.

   A) GALVANIZED PER O.D.O.T. SPEC. 725.01-H, AND THE FOLLOWING ASTM SPECS:

      SEAMLESS STEEL PIPE ASTM A53
      POLES ASTM A123
      IRON & STEEL HARDWARE & FASTENERS ASTM A153

   B) GALVANIZED & PAINTED POLES PER O.D.O.T. SPEC. 725.01-H.

   C) PAINTED POLES - ALL STEEL SHALL BE PRIME PAINTED (INTERIOR AND EXTERIOR) WITH ZINC RICH DUST PRIMER OR RUST INHIBITIVE PRIMER PER F-73 SPEC.
6. MARKING

   THE POLE SHALL HAVE PERMANENTLY ATTACHED, THE FOLLOWING INFORMATION:

   1. THE MANUFACTURER'S NAME OR INITIALS.
   2. THE CITY POLE DESIGN NUMBER.

STEEL POLE PHYSICAL PROPERTIES

X = EXTRA HEAVY CAST BASE

FOUNDATION DESIGN NUMBER	CITY OF CINCINNATI DESIGN NO.	ANCHOR BASE POLES										LOAD & DEFLECTION PROPERTIES			EMBEDDED POLES		
		SHAFT SIZE		ANCHOR BOLTS		BASE DIMENSIONS (INCHES)						MAXIMUM DEFLECTION INCHES PER 100 LB LOAD	YIELD STRENGTH MIN. LOAD TO PERMANENT SET LBS.	MAXIMUM MOMENT AT YIELD (FT.-LBS.)	SHAFT SIZE		
		GAUGE	BASE DIA.(IN.) X LENGTH (FT.)	SIZE (INCHES)	BOLT CIRCLE B INCHES	DIM. F	DIM. H PLATE BASE	DIM. H CAST BASE	DIM. S	DIM. T PLATE BASE	DIM. T CAST BASE				GAUGE	BASE DIA AT GRD. LINE (INCHES)	OVERALL LENGTH (FT.)
FDN-7	29053	0	9 x 26	1 1/2x60	12 1/2	8 7/8	1 3/4	1 7/8	12 3/4	1 1/2	1 5/16	0.53	2930		3	9	32
	27070	0	9 x 28	1 1/2x60	12 1/2	8 7/8	1 3/4	1 7/8	12 3/4	2	1 5/16 X	0.70	2700		0	9	34
FDN-9	36037	0	10 x 26	1 1/2x60	13 1/2	9 9/16	1 3/4	1 7/8	14 1/8	2	1 7/16	0.37	3650		0	10	32
	33048	0	10 x 28	1 1/2x60	13 1/2	9 9/16	1 3/4	1 7/8	14 1/8	2	1 7/16	0.48	3370		0	10	34
FDN-10	38045	0	11 x 30	1 3/4x90	15	10 5/8	2 1/8	2 1/8	15 5/8	2	1 5/8 X	0.45	3840		0	11	36
FDN-12	52028	7x7	12 x 30	2x96	18	12 3/4	2 3/8	NOT APPL.	18 1/2	2	NOT APPL.	0.28	5210		7x7	12	36
FDN-13	72025	3x3	13 x 34	2 1/4x96	22	15 9/16	2 3/4	NOT APPL.	23	2 1/4	NOT APPL.	0.25	7270				

ANCHOR BASES

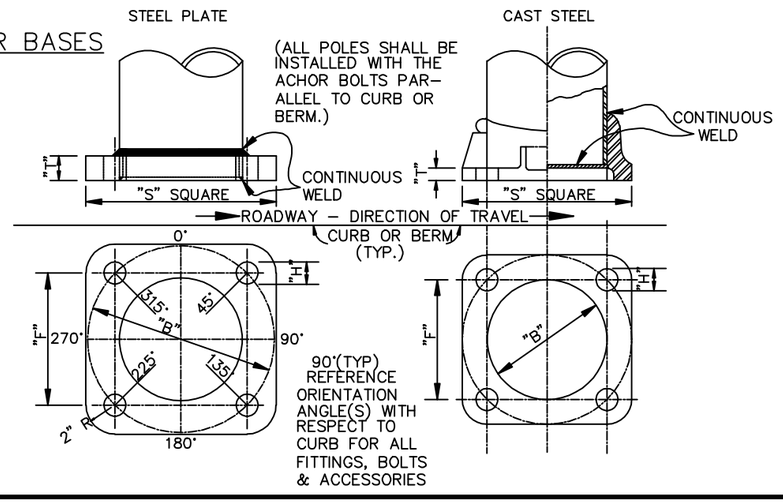

THE BASES SHALL BE OF ONE PIECE CAST STEEL CONSTRUCTION CONFORMING TO 711.07 OR STEEL PLATE CONFORMING TO 711.07.

711.07 STEEL CASTINGS. ASTM A486, CLASS 70 OR ASTM A-27, GRADE 70-36 WITH THE FOLLOWING ADDITIONS.
STEEL CASTING SHALL BE FREE FROM POURING FAULTS, SPONGINESS, CRACKS, BLOWHOLES, AND OTHER DEFECTS IN POSITIONS AFFECTING THEIR STRENGTH AND VALUE FOR SERVICE INTENDED. NO SHARP UNFILLETED ANGLES OR CORNERS WILL BE ALLOWED.

711.07 STRUCTURAL STEEL. STEEL SHALL BE STRUCTURAL STEEL ASTM A-36.
THE BASES SHALL TELESCOPE THE LOWER END OF THE SHAFT AND BE SECURED TO THE SHAFT BY TWO CONTINUOUS ELECTRIC ARC WELDS, ONE ON THE TOP OUTSIDE OF THE BASE, THE SECOND ON THE INSIDE OF THE BASE AT THE END OF THE SHAFT. THE TWO WELDS SHALL BE AT LEAST 1 1/2 INCHES APART AND THE WELDED CONNECTION SHALL DEVELOP THE STRENGTH OF THE ADJACENT SHAFT SECTION.
WHERE 2-PLY POLE SHAFTS ARE SPECIFIED, FURNISH STEEL BASE PLATES.

4 EACH CAST IRON, GALVANIZED OR STAINLESS STEEL OR ALUMINUM BOLT COVERS SHALL BE PROVIDED WITH STAINLESS STEEL BOLTS TO SECURE COVER TO BASE. BOLT COVERS SHALL NOT EXTEND BEYOND BASE PLATE.

POLE DESIGN NUMBER CODE

36 037

THE FIRST TWO(2) DIGITS REPRESENT MIN. LOAD AT YIELD STRESS IN HUNDREDS OF POUNDS.

THE LAST THREE(3) DIGITS REPRESENT DEFLECTION IN INCHES AND HUNDREDTHS PER HUNDRED POUND LOAD.

STATE OF OHIO
STEVEN GERALD BAILEY
49331
REGISTERED
PROFESSIONAL ENGINEER

DESIGN	REVISION	DATE	WO #
S.C.H.	Steve Bailey	9/28/04	UPDATE
T.E.		3/1/98	
R.R.R.	APPROVED	6/22/84	—

MANUFACTURER FURNISHED EQUIPMENT-POLES (ES-10)

TRAFFIC SIGNAL STRAIN POLES AND PEDESTAL POLES

CITY OF CINCINNATI
DEPT. OF PUBLIC WORKS
DIV. OF TRAFFIC ENGR.

APPROVED Steve Bailey DATE 3-4-99

SCALE	SOURCE	DRAWN	FILE NO.
—	ES-1-1 4/27/88	TEC ENGINEERING	ES-10-1

FED. RD. DIV.	STATE	PROJECT	FISCAL YEAR
5	OHIO		

TWIN DAVIT ARM DESIGN

ORIENT ON POLE AS SPECIFIED

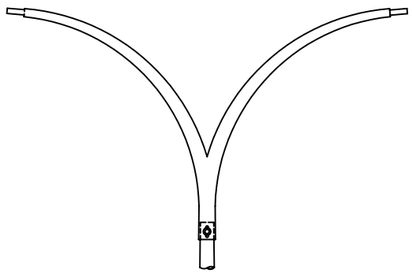

POLE PHYSICAL PROPERTIES

POLE DATA			ANCHOR BOLTS			BASE DIMENSIONS (IN.)			POLE DESIGN NUMBER				FOUNDATION DESIGN NUMBER
									6 FT. DAVIT ARM		9 FT. DAVIT ARM		
HEIGHT [LUMINAIRE MTG.HEIGHT] (FT.)	BASE DIA. (IN.)	GAUGE	SIZE (IN.)	P BOLT PROJ. (IN.)	H SEE NOTE Ⓐ	B BOLT CIRCLE (IN.)	S DIM.	T DIM. (IN.)	SINGLE ARM	TWIN ARM	SINGLE ARM	TWIN ARM	
25	7 1/2	11	1x 40	2 1/4	–	10 1/2	11	1	11A6D25	11A6DD25	–	–	FDN–1
30	8	11	1x 40	2 1/4	–	11	11 1/2	1	11A6D30	11A6DD30	11A9D30	11A9DD30	FDN–2
35	9	11	1x 40	2 1/2	–	12 1/2	13	1 1/4	11A6D35	11A6DD35	11A9D35	11A9DD35	FDN–3
40	9 1/2	11	1x 40	2 1/2	–	13	13 1/2	1 1/4	11A6D40	11A6DD40	11A9D40	11A9DD40	FDN–4
35 Ⓑ	9	3x 3	1 3/4x90	3 3/4	–	15	15 5/8	2	33A6D35	–	33A9D35	–	FDN–10

Ⓐ –BOLT HOLES IN BASE 1/4" LARGER IN DIA. THAN ANCHOR BOLT DIA. –MAY BE CIRCULAR OR SLOTTED.
Ⓑ –"LT" TYPE POLE SHAFT SHALL BE 27'– 6" IN LENGTH.

GENERAL NOTES

POLES SHALL BE ANCHOR BASE AND FABRICATED OF STEEL MATERIAL AND SHALL COMPLY WITH AASHTO "STANDARD SPECIFICATIONS FOR STRUCTURAL SUPPORTS FOR HIGHWAY SIGNS, LUMINAIRES AND TRAFFIC SIGNALS" WITH THE FOLLOWING EXCEPTIONS/AND/OR ADDITIONS:

1. DESIGN WIND LOAD SHALL BE BASED ON 90 MILES PER HOUR.
2. MINIMUM YIELD STRENGTH AFTER FABRICATION SHALL BE 55,000 P.S.I.
3. SHAFT CONSTRUCTION SHALL MEET THE REQUIREMENTS OF O.D.O.T. SPEC. 725.01–B.
4. SHAFT SHALL BE TUBULAR TAPERED AND SHALL PROVIDE A 0.14 INCHES/FOOT TAPER.
5. THE DAVIT ARM SHALL TELESCOPE WITH A SLIP FIT OVER THE MAIN SHAFT AND BE SECURED WITH A 5/8" MIN. STAINLESS STEEL HEX HEAD THROUGH BOLT & NUT. ONE– PIECE POLE ACCEPTABLE FOR 25' SIZE.
6. BASE PLATES SHALL BE STRUCTURAL STEEL ASTM–36 AND SHALL BE SECURED TO THE SHAFT WITH TWO CONTINUOUS WELDS PER O.D.O.T. SPEC. 725.01. SURFACES SHALL THOROUGHLY COATED WITH AN ALUMINUM IMPREGNATED CAULKING COMPOUND.
7. 4 EACH CAST IRON, STEEL OR ALUMINUM BOLT COVERS SHALL BE PROVIDED WITH STAINLESS STEEL BOLTS TO SECURED COVER TO BASE.
8. WELDING SHALL COMPLY WITH O.D.O.T. SPEC. 513.21 AND SHALL BE CONTINUOUS WELDS DEVELOPING THE FULL STRENGTH OF THE POLE.
9. POLE FINISH
   POLE FINISH SHALL BE SPECIFIED AS ONE OF THE FOLLOWING
   A) GALVANIZED PER O.D.O.T. SPEC. 725.01–H.
   B) GALVANIZED & PAINTED POLES PER O.D.O.T. SPEC. 725.01–I.
   C) PAINTED POLES– ALL STEEL SHALL BE PRIME PAINTED (INTERIOR AND EXTERIOR) WITH ZINC RICH DUST PRIMER OR RUST INHIBITIVE PRIMER PER F–73 SPEC.

TYPICAL DAVIT ARM TYPE POLE DESIGN

LIGHTING "L" OR LIGHTING & TRAFFIC "LT"

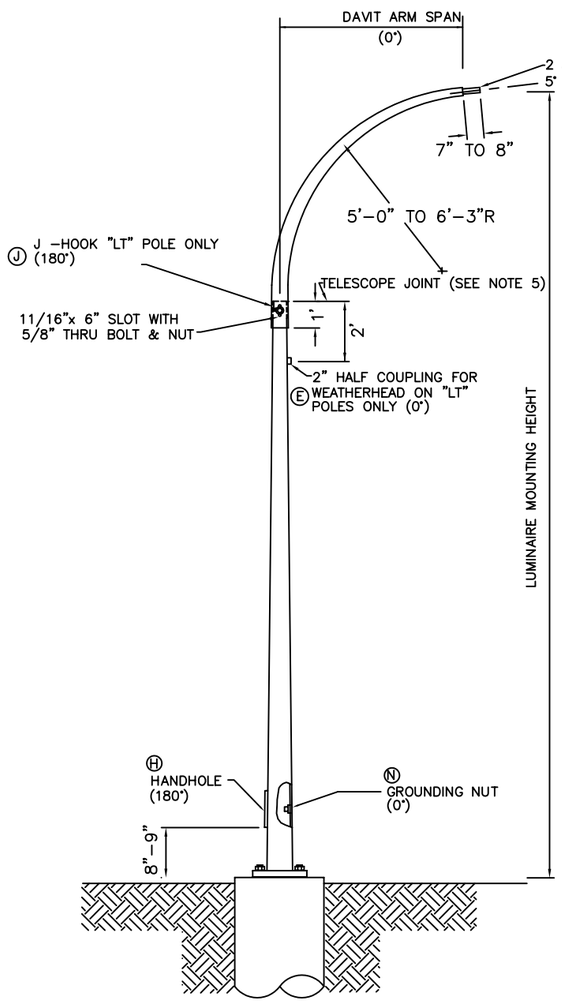

POLE BASE DIMENSIONS

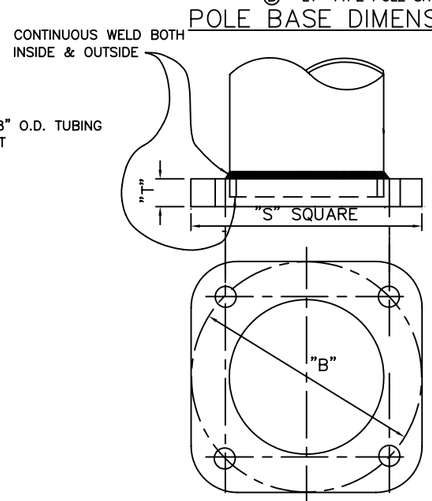

"J" HOOK WIRE SUPPORT

ACCESSORY Ⓗ "LT" POLES

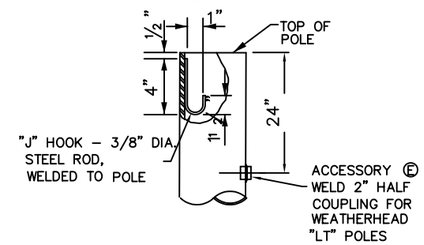

HAND HOLE COVER

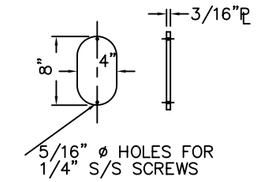

HANDHOLES

ACCESSORY Ⓗ

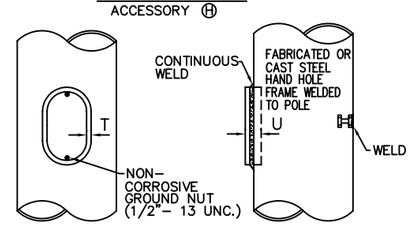

ACCESSORY Ⓝ
ALTERNATE GROUND NUT LOCATION MAY BE PROVIDED ON HANDHOLE FRAME (POLE INTERIOR) BUT SHALL NOT BE POSITIONED SO AS TO RESTRICT OR IMPEDE ACCESS TO POLE INTERIOR.

BASE TYPE
A– ANCHOR BASE

LIGHTING ARM TYPE
D– DAVIT ARM (SINGLE)
DD– DAVIT ARM (TWIN)

11 A 9 D 35

POLE GAUGE

LIGHTING ARM LENGTH

LUMINAIRE MOUNTING HEIGHT

ANCHOR BOLTS

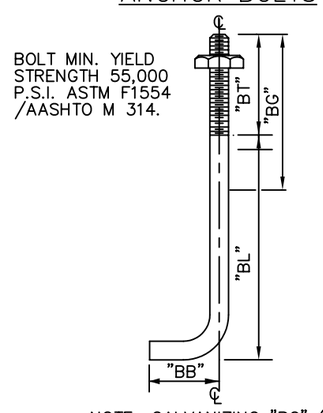

NOTE: GALVANIZING "BG" (THREAD LENGTH) + 1" TO 4". LEVELING NUTS, ANCHOR NUTS, & LEVELING SHIMS SHALL BE GALVANIZED PER ASTM A–153. ANCHOR BOLTS, ANCHOR NUTS, & LEVELING NUTS SHALL CONFORM TO ASTM A–563 GRADE A.

LEVELING SHIMS SHALL HAVE A MIN. 10,000 LB. BREAKING STRENGTH. ANCHOR BOLTS SHALL BE "L" SHAPED.

ANCHOR BOLTS DIMENSIONS (INCHES)

BOLT SIZE	"BB"	"BL"	"BT"	"BG"
1"x 40"	4	30	6	8
1 1/2"x 60"	6	45	9	11

ANCHOR BOLTS FOR BRIDGE MOUNTED POLES

ANCHOR BOLTS MUST MEET THE REQUIREMENTS HEREIN, EXCEPT THE BOLTS SHALL BE "U" SHAPED AND MUST EXTEND INTO THE FIRST POUR OF THE STRUCTURE.

"P" BOLT PROJECTION

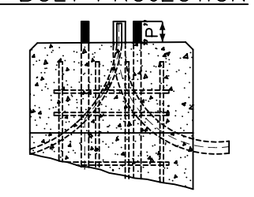

STATE OF OHIO
STEVEN GERALD BAILEY
49331
REGISTERED
PROFESSIONAL ENGINEER

MANUFACTURER FURNISHED EQUIPMENT – POLES (ES–10)

LIGHTING POLES WITH DAVIT ARMS

CITY OF CINCINNATI
DEPT. OF PUBLIC WORKS
DIV. OF TRAFFIC ENGR.

APPROVED Steve Bailey DATE 3–4–99

DESIGN	REVISION	DATE	WO #	SCALE	SOURCE	DRAWN	FILE NO.
S.C.H.	Steve Bailey	3/1/05	UPDATE	–		VGRD	ES–10–3
	APPROVED	01/19/95					

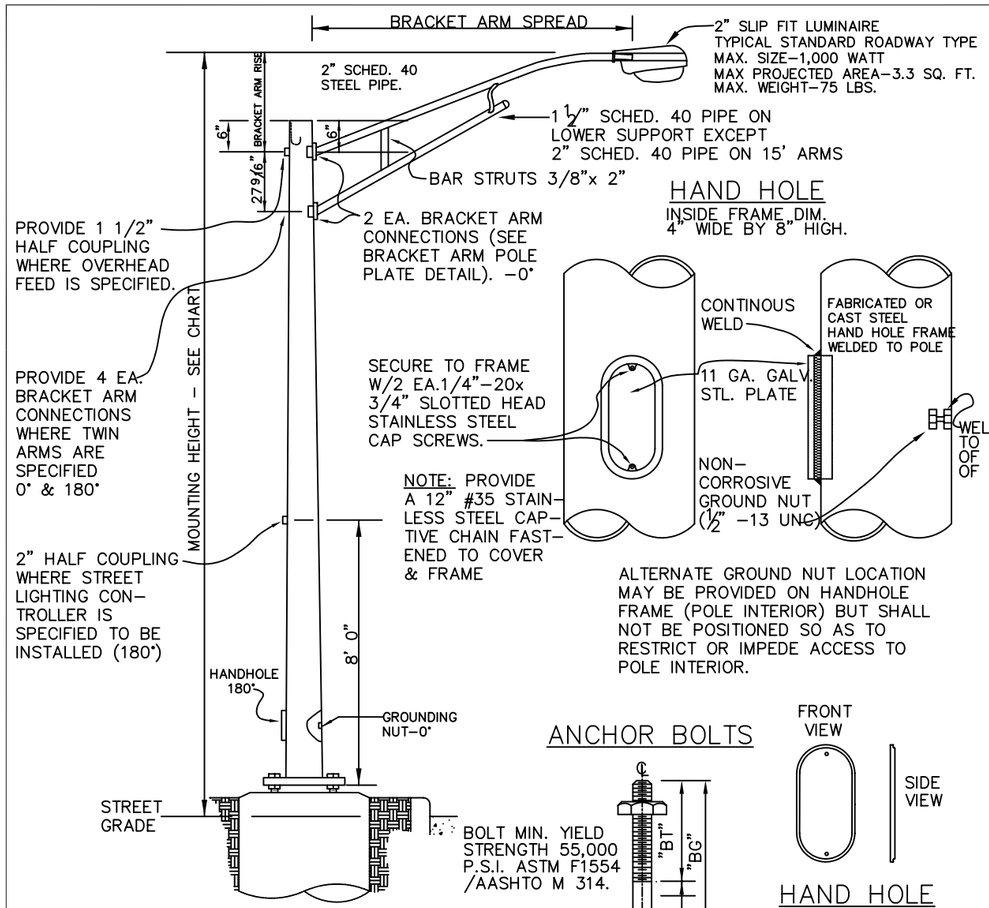

HAND HOLE

INSIDE FRAME DIM.
4" WIDE BY 8" HIGH.

NOTE: PROVIDE A 12" #35 STAINLESS STEEL CAPTIVE CHAIN FASTENED TO COVER & FRAME

ALTERNATE GROUND NUT LOCATION MAY BE PROVIDED ON HANDHOLE FRAME (POLE INTERIOR) BUT SHALL NOT BE POSITIONED SO AS TO RESTRICT OR IMPEDE ACCESS TO POLE INTERIOR.

BRACKET ARM POLE PLATES

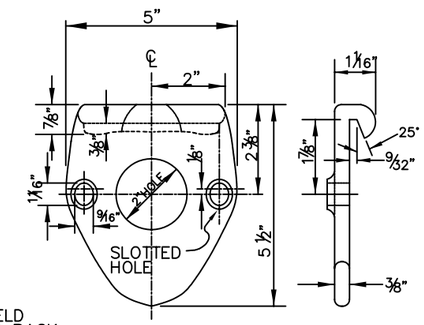

BRACKET ARM PLATE

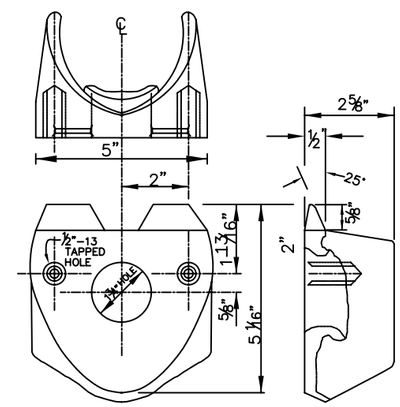

POLE PLATE

HAND HOLE COVER

ANCHOR BOLTS

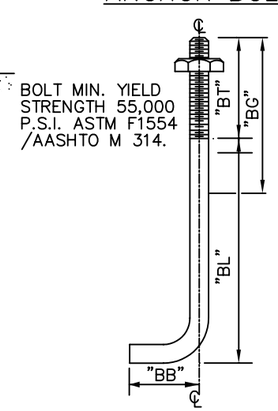

NOTE: GALVANIZING "BG" (THREAD LENGTH) + 1" TO 4". LEVELING NUTS, ANCHOR NUTS, & LEVELING SHIMS SHALL BE GALVANIZED PER ASTM A–153. ANCHOR BOLTS, ANCHOR NUTS, & LEVELING NUTS SHALL CONFORM TO ASTM A–563 GRADE A.

LEVELING SHIMS SHALL HAVE A MIN. 10,000 LB. BREAKING STRENGTH. ANCHOR BOLTS SHALL BE "L" SHAPED.

ANCHOR BOLTS FOR BRIDGE MOUNTED POLES

ANCHOR BOLTS MUST MEET THE REQUIREMENTS HEREIN, EXCEPT THE BOLTS SHALL BE "U" SHAPED AND MUST EXTEND INTO THE FIRST POUR OF THE STRUCTURE.

POLE BASE DIMENSIONS

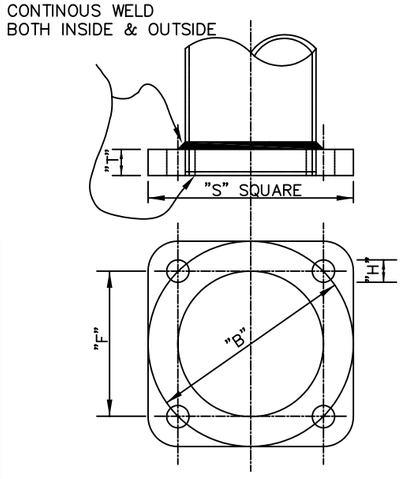

POLE CAPS
POLE CAPS SHALL BE OF MALLEABLE STEEL OR CAST IRON SECURD WITH STANINLESS STEEL SET SCREWS, OR, THE CAP MAY BE OF A "SNAP FIT" DESIGN. CAPS SHALL BE OVERSIZE TO PROVIDE VENTLLATION.

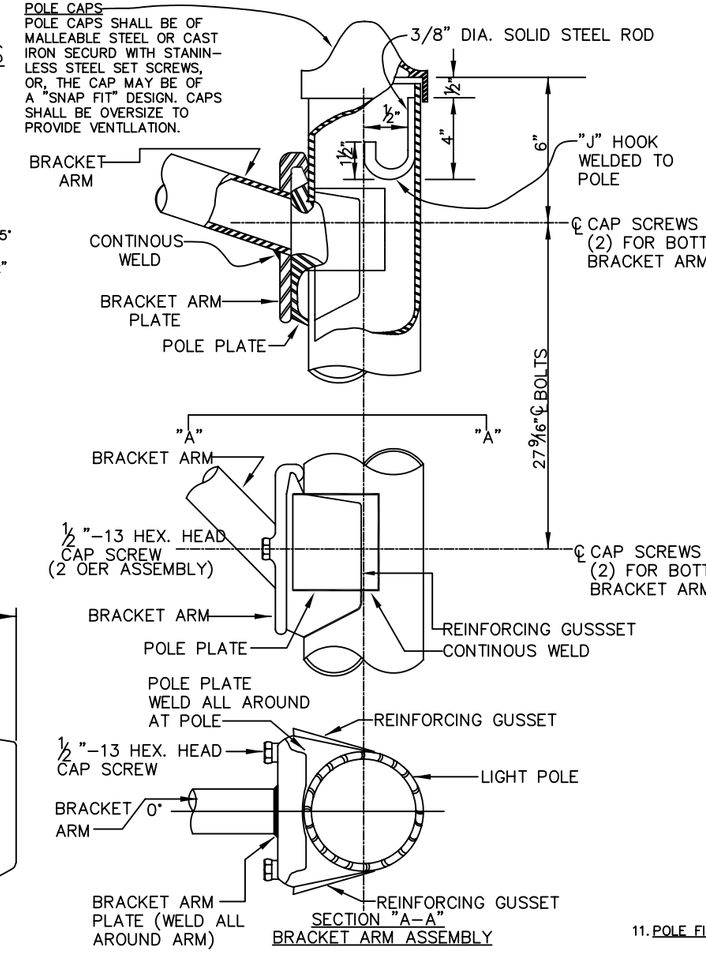

SECTION "A–A"
BRACKET ARM ASSEMBLY

FED. RD. DIV.	STATE	PROJECT	FISCAL YEAR
5	OHIO		

POLES SHALL BE ANCHOR BASE AND FABRICATED OF STEEL MATERIAL AND SHALL COMPLY WITH AASHTO "STANDARD SPECIFICATIONS FOR STRUCTURAL SUPPORTS FOR HIGHWAY SIGNS, LUMINAIRES AND TRAFFIC SIGNALS" WITH THE FOLLOWING EXCEPTIONS/ AND/OR ADDITIONS:

1. DESIGN WIND LOAD SHALL BE BASED ON 90 MILES PER HOUR.
2. MINIMUM YIELD STRENGTH AFTER FABRICATION SHALL BE 55,000 P.S.I.
3. SHAFT CONSTRUCTION SHALL MEET THE REQUIREMENTS OF O.D.O.T. SPEC. 725.01–B.
4. SHAFT SHALL BE TUBULAR TAPERED AND SHALL PROVIDE A 0.14 INCHES/FOOT TAPER.
5. BRACKET ARM, POLE AND GUSSET PLATES SHALL BE STEEL CONFORMING TO ASTM A–36. SCREWS FOR SECURING BRACKET ARM TO POLE SHALL BE HIGH STRENGTH STEEL BOLTS (CAP SCREWS) CONFORMING TO ASTM A–193 GRADE B–7.
6. BRACKET ARMS SHALL BE FABRICATED WITH SCHEDULE 40 PIPE AND SHALL BE IN CONFORMANCE WITH SPEC. 725.01. STRUTS SHALL BE STEEL CONFORMING TO ASTM A–36.
7. BASE PLATES SHALL BE STRUCTURAL STEEL ASTM A –36 OR CAST STEEL PER SPEC. 725.01 AND SHALL BE SECURED TO THE SHAFT WITH TWO CONTINOUS WELDS PER O.D.O.T. SPEC 725.01.
8. 4 EACH CAST IRON, GALVANIZED OR STAINLESS STEEL OR ALUMINUM BOLT COVERS SHALL BE PROVIDED WITH STAINLESS STEEL BOLTS TO SECURED COVER TO BASE.
9. WELDING SHALL COMPLY WITH O.D.O.T. SPEC 513.21 AND SHALL BE CONTINOUS STRUCTURAL WELDS DEVELOPING THE FULL STRENGTH OF THE POLE.
10. FITTINGS SHALL CONFORM TO SPEC. 725.01 AND FABRICATED FROM STAINLESS STEEL, GALVANIZED STEEL OR SILICON BRONZE.
11. POLE FINISH

POLE FINISH SHALL BE SPECIFIED AS ONE OF THE FOLLOWING:

A.) GALVANIZED PER O.D.O.T. SPEC. 725.01–H AND THE FOLLOWING ASTM SPECS:

POLES, SEAMLESS STEEL PIPE ASTM A–123
IRON AND STEEL HARDWARE & FASTNERS ASTM A–153
BRACKET ARMS ASTM A–123

B.) GALVANIZED & PAINTED POLES PER O.D.O.T. SPEC 725.01–H.

C.) PAINTED POLES– ALL STEEL SHALL BE PRIME PAINTED (INTERIOR AND EXTERIOR) WITH ZINC RICH DUST PRIMER OR RUST INHIBITIVE PRIMER PER F–73 SPEC.

POLE PHYSICAL PROPERTIES

MOUNTING HEIGHT		POLE SIZE				BASE & ANCHOR DIMENSIONS (INCHES)					POLE DESIGN NUMBER (BY BRACKET ARM SPREAD)					FOUNDATION DESIGN NUMBER
TOTAL HEIGHT (FT.)	ARM RISE (FT.)	GAUGE	BASE DIA. (IN.)	TOP DIA. (IN.)	OVER–ALL LENGTH (FT.)	ANCHOR BOLTS	B BOLT CIRCLE	F DIM.	S DIM.	T DIM.	NUMBER OF ARMS	8'	10'	12'	15'	
35	5 1/2	11	8.00	3.80	30	1 x 40	11	7 3/4	11 1/2	1	SINGLE	11A8B35	11A10B35	11A12B35	––	FDN–2
											TWIN	11A8BB35	11A10BB35	––	––	
		11	9.00	4.80	30		12 1/2	8 7/8	12 3/4	1 1/4	SINGLE	––	––	––	11A15B35	FDN–3
											TWIN	––	––	11A12BB35	11A15BB35	
		0	11.00	6.80	30	1 3/4 x90	15	10 5/8	15 5/8	2	SINGLE	0A8B35	0A10B35	0A12B35	0A15B35	FDN–10
											TWIN	0A8BB35	0A10BB35	0A12BB35	0A15BB35	
40	7	11	10.00	5.31	33 1/2	1 x 40	13 1/2	9 9/16	14	1 1/4	SINGLE	11A8B40	11A10B40	11A12B40	11A15B40	FDN–5
											TWIN	11A8BB40	11A10BB40	11A12BB40	11A15BB40	
		0	13.00	8.31	33 1/2	2 x 96	18	12 3/4	18 1/2	2	SINGLE	0A8B40	0A10B40	0A12B40	0A15B40	FDN–12
											TWIN	0A8BB40	0A108BB40	0A12BB40	0A15BB40	

NOTE: DIMENSION "H"–BOLT HOLES /" LARGER IN. DIA. THAN ANCHOR BOLT DIA. IN BASE AND MAY BE CIRCULAR OR SLOTTED
"O" GAUGE POLES– ARE "LT" (LIGHTING & TRAFFIC)
0A8B35 THRU 0A15BB35 IS THE SAME AS #38045 SIGNAL STRAIN POLE

POLE DESIGN NUMBER CODE

11A 10B 35

- BASE TYPE: A–ANCHOR BASE
- POLE GAUGE
- LIGHTING ARM LENGTH
- LIGHTING ARM TYPE: B–BRACKET ARM (SINGLE), BB–BRACKET ARMS (TWIN)
- LUMINAIRE MOUNTING HEIGHT

STATE OF OHIO
STEVEN GERALD BAILEY
49331
REGISTERED
PROFESSIONAL ENGINEER

MANUFACTURER FURNISHED EQUIPMENT – POLES (ES–10)

LIGHTING POLES WITH BRACKET ARMS

CITY OF CINCINNATI
DEPT. OF PUBLIC WORKS
DIV. OF TRAFFIC ENGR.

S.C.H.	Steve Bailey	4/5/05	UPDATE	APPROVED Steve Bailey DATE 3–4–99
DESIGN	REVISION	DATE	WO #	SCALE / SOURCE / DRAWN / FILE NO.
R.R.R.	APPROVED	6–22–84	——	—— / TEC ENGINEERING / ES–10–2

FED. RD. DIV.	STATE	PROJECT	FISCAL YEAR
5	OHIO		

STEEL TRANSFORMER BASES

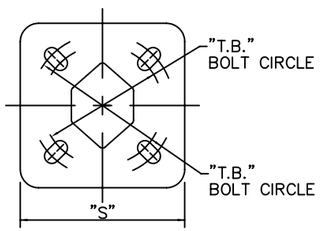

TOP PLAN VIEW

TABLE 1
STEEL TRANSFORMER BASE PHYSICAL PROPERTIES

POLE BASE DIMENSIONS (INCHES)	6-1/2 TO 8-1/2	8-1/2 TO 9-1/2
BASE DIMENSIONS "W" (INCHES)	16	18
TOP DIMENSIONS "S" (INCHES)	13	15
"LB" FOUNDATION BOLT CIRCLE (BASE) INCHES	15	17-1/4
"TB" POLE BOLT CIRCLE (TOP) INCHES	9-1/2 TO 11-1/2	11-1/2 TO 13
"T" TOP & BOTTOM PLATE THICKNESS (INCHES)	3/4	1-1/4

TABLE 2
TRANSFORMER BASE ANCHOR BOLTS

POLE SHAFT BASE DIA (INCHES)	POLE BOLT CIRCLE (INCHES)	POLE GAUGE 11	POLE GAUGE 7
		FOUNDATION ANCHOR BOLTS (INCHES)	
8	11	1 X 40	
9	12-1/2	1 X 40	
9-1/2	13	1 X 40	1-1/4 X 48
10	13-1/2	1 X 40	1-1/4 X 48
BOLT DIMENSIONS CONNECTING BOLTS SAME DIAMETER AS ANCHOR BOLTS			
CONNECTING BOLTS (INCHES)		1 X 3-1/2	1-1/4 X 4
FOUNDATION ANCHOR BOLTS (INCHES)		1 X 40	1-1/4 X 48

NOTE: BOLT SLOTS IN BASE MAY BE MODIFIED TO FIT 1-1/4 INCH. BOLTS WHERE SPECIFIED.

TABLE 3
ALUMINUM TRANSFORMER BASE PHYSICAL PROPERTIES

DIMENSIONS	AT-A STYLE BASE	AT-C STYLE BASE
BASE DIMENSION "W" (INCHES)	15①	17 1/4
TOP DIMENSION "S" (INCHES)	13①	14 5/8
"TB" BOLT CIRCLE (TOP OF BASE-INCHES)	11 TO 12 1/2	13 TO 13 1/2
"LB" BOLT CIRCLE AT FOUNDATION (INCHES)	12 1/2 TO 15	17 1/4
APPLICABLE POLE SIZES PER BASE STYLE (BASE DIA.-INCHES	8 TO 9	9 1/2 TO 10

① ±3/8 INCHES

GENERAL NOTES

STEEL TRANSFORMER BASES

STEEL TRANSFORMER BASES SHALL BE MADE FROM STEEL CONFORMING TO ASTM A-36 AND SHALL BE GALVANIZED PER ASTM-123.

ALUMINUM TRANSFORMER BASES

ALUMINUM TRANSFORMER BASES SHALL COMPLY WITH THE FRANGIBILITY REQUIREMENTS SPECIFIED IN THE AASHTO "STANDARD SPECIFICATIONS FOR STRUCTURAL SUPPORTS FOR HIGHWAY SIGNS, LUMINAIRES AND TRAFFIC SIGNALS." (MOST RECENT EDITION)

ALUMINUM BASES SHALL BE PERMANENT MOLD CASTINGS, ALUMINUM ALLOY 356-T6. WHERE ALUMINUM TRANSFORMER BASES USED WITH STEEL POLES, BOTH SURFACES SHALL BE COATED OR PAINTED WITH A HEAVY FILM OR ZINC RICH PAINT (FEDERAL SPEC. TT-P-641-TYPE II.)

FRANGIBILITY

BASES SHALL BREAKAWAY OR COLLAPSE UNDER THE FOLLOWING LOAD CONDITIONS.

BASE STYLE	MOMENT FOOT-LBS.	LOAD APPLIED ON
AT-A	34,850	12 1/2 INCH BOLT CIRCLE
AT-C	56,000	13 1/2 INCH BOLT CIRCLE
AT-X	34,000	12 1/2 INCH BOLT CIRCLE

CONNECTING BOLTS, NUTS AND WASHERS

HEX BOLTS AND NUTS SHALL CONFORM TO ASTM A-307. STEEL WASHERS SHALL CONFORM TO ASTM F-436. BEARING CLIPS OR HOLD DOWN LUGS SHALL CONFORM TO ASTM B-695 CLASS 50.

ALL NUTS, BOLTS, WASHERS, LUGS AND CLIPS SHALL BE HOT DIP GALVANIZED IN ACCORDANCE WITH ASTM A-153.

STEEL FLAT WASHERS UNDER BOLTS AND NUTS (2 EACH PER BOLT) SHALL BE MIN. 2 1/2 INCH O.D. X 5/32 INCH THICK. 2 INCH O.D. MAY BE USED UNDER BOLT HEAD ON TOP OF BASE WHERE SPACE IS LIMITED. WASHERS UNDER ANCHOR BASE BOLTS SHALL BE MIN. 2 1/2 INCH O.D. X 3/8 INCH THICK.

BEARING CLIPS, LUGS AND CONNECTING OR HOLD DOWN WASHERS WHERE PROVIDED SHALL BE MIN 2 1/2 INCH O.D. X 1/2 INCH THICK.

CONNECTING NUTS AND BOLTS AND ALL LUGS, CLIPS AND WASHERS SHALL BE FURNISHED WITH THE RESPECTIVE TRANSFORMER BASE.

SPECIFICATONS

SPECIFICATION NUMBERS REFER TO OHIO DEPT. OF TRANSPORTATION, "CONSTRUCTION & MATERIAL SPECIFICATIONS," AND ASTM SPECIFICATIONS. CITY OF CINCINNATI SUPPLEMENTAL SPECIFICATIONS TO O.D.O.T. C & M SPECIFICATIONS ITEM 1318.01 ALSO APPLIES FOR CITY PROJECTS AND CONTRACTS.

STATE OF OHIO
STEVEN GERALD BAILEY
49331
REGISTERED
PROFESSIONAL ENGINEER

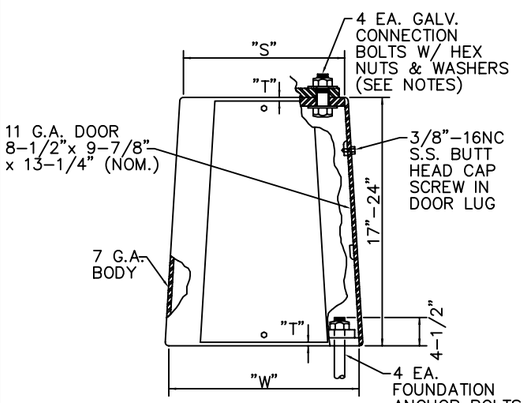

ELEVATION VIEW

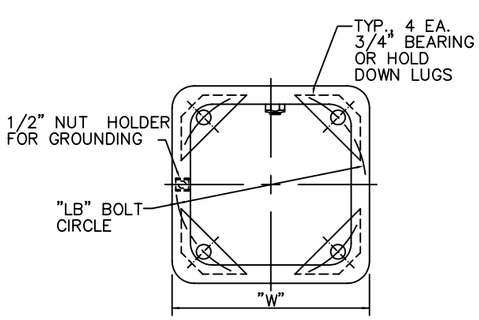

BOTTOM PLAN VIEW

ALUMINUM TRANSFER BASE (STYLE AT-A & AT-C)

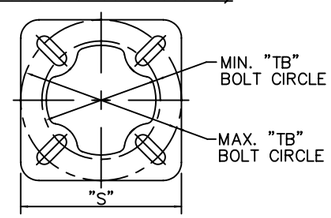

TOP PLAN VIEW

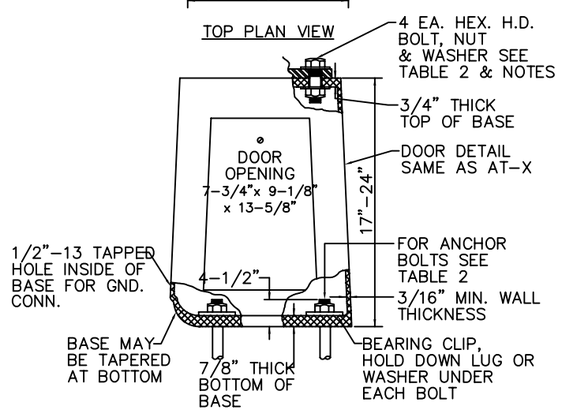

ELEVATION VIEW

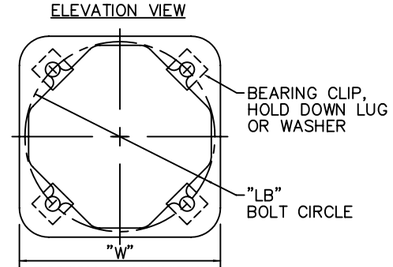

BOTTOM PLAN VIEW

FRANGIBLE ALUMINUM TRANSFORMER BASE (STYLE AT-X MOD.)

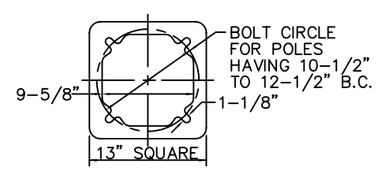

TOP PLAN VIEW

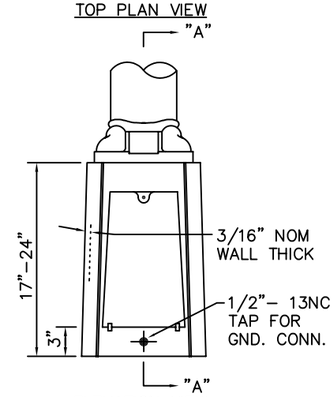

ELEVATION VIEW

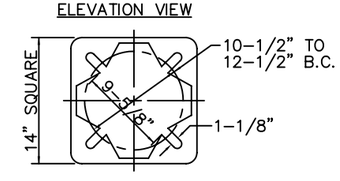

BOTTOM PLAN VIEW

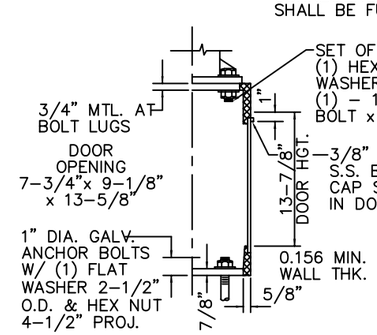

SECTION A-A

MANUFACTURER FURNISHED EQUIPMENT - POLES (ES-10)

TRANSFORMER BASES

CITY OF CINCINNATI
DEPT. OF PUBLIC WORKS
DIV. OF TRAFFIC ENGR.

S.C.H.	Steve Bailey	9/29/04	UPDATE	APPROVED Steve Bailey		DATE 3-4-99	
DESIGN	REVISION	DATE	WO #	SCALE	SOURCE	DRAWN	FILE NO.
R.R.R.	APPROVED	6/24/92				CDS ASSOCIATES	ES-10-4