DECKING OVER FORT WASHINGTON WAY REPORT

April 10, 2002

Table of Contents

Page No.

Introduction 1

Ventilation Analysis
- Introduction 2
- Assumptions 2
- Synopsis of Systems 2
- Design Criteria 2
- Code Application 3
- Engineering Analysis 3
- Proposed Systems 4
  - System 1 – Longitudinal Ventilation with Supply and Exhaust 4
  - System 2 – Semitransverse Ventilation with Exhaust Only 4
  - System 3 – Semitransverse Ventilation with Supply and Exhaust 4
  - System 4 – Semitransverse Vent. with Smallest Supply and Exhaust 4
- Tunnel Length and NFPA 4
- Make-Up Air Quality 4
- Ambient Air Quality Above the Decks 5
- Ventilation System Recommendations 5

Other Design Issues 6
- Structural Requirements 6
- Ventilation Requirements/Air Quality 6
- Fire Protection Requirements 6
- Lighting Requirements 6
- Signage Requirements 6
- Life Safety and Emergency Egress 7
- Snow Removal (above and below) 7
- Maintenance Provisions 7
- Air Rights 7

Proposed Deck Configurations 8
- Option A – Original Fort Washington Way Configuration 8
- Option B – Continuous Deck at Vine Street 9
- Option C – Continuous Deck from Race to Walnut 10

Conclusions 11

Appendices — Appendix

Calculations ..... A
Charts ..... B
Schematic Drawings C
Cost Estimates ..... D
Emergency Access Report ..... E
Construction Drawings ..... F

INTRODUCTION

Foundation work for the future deck-over has been installed under Contracts #8 and #9 of the Fort Washington Way (FWW) Reconstruction project. This early investment will substantially reduce costs and disruption to the CBD when the deck over Fort Washington Way is installed. The drawings for this current construction, as well as conceptual level detail drawings for the future decking over construction, are attached to this report (Appendix F).

Piles were placed to allow the deck-over to extend from mid-block Elm to Race on the west to mid-block Walnut to Main on the east. Piles are placed for two full blocks and two half blocks of deck-over, except that there are 25-foot spaces between the deck-over sections and the cross-bridges at Race, Vine and Walnut Streets.

VENTILATION

Introduction

The purpose of this study is to analyze the effect of emissions buildup from cars by covering a portion of the roadway with concrete deck sections. This study will then propose systems to prevent excessive buildup of emissions and give cost estimates for each system. There will be four decked sections between Elm and Main streets over the depressed highway area. Two decks will be approximately 300 feet long each and the other two 150 feet long each. Between each deck will be an elevated street section (Race, Vine and Walnut streets), with an open area on each side. Several ventilation systems were investigated. The three described in this report are the ones considered to be the most applicable for this installation.

Assumptions

This study is based on assuming all the vehicles are idling while stopped. Percentages of assumed vehicle types are the following: 80% passenger vehicles, 15% trucks/SUV, 1% buses, 4% 18 wheel tractor trailer. The distance between each vehicle was assumed to be 4 feet front and rear. Vehicular dimensions were determined from the Architectural Graphic Standards, 9th edition. (Reference App. 1.B, Vehicular Emissions Chart)

Synopsis of Systems

This study evaluates four separate systems that ranged from large forms with few large openings to smaller multiple forms requiring multiple smaller openings. Large forms produce structural challenges, while smaller forms reduce the structural challenges, but present aesthetic challenges from the high visibility of these multiple fans and their tall housings.

System 1 proposes mounting axial jet supply fans to the underside of the decking promoting longitudinal ventilation with fans directed toward the center of the decked area along the roadway, plus mounting propeller exhaust fans on top of the decking.

System 2 proposes mounting propeller fans on the concrete decks to exhaust the air from below the decks and also mounting axial jet fans below the decking with ductwork to exhaust air from near the road surface.

System 3 proposes mounting propeller fans on the concrete decks to exhaust air from below the decks. In addition to the exhaust fans above the decks, axial fans mounted below the decking supply fresh air to the occupied area through ductwork discharging near the road surface. The supply fans would have ductwork located near the road surface to supply air at the roadway. By supplying air directly into the space, less air is needed to exhaust the space.

System 4 is identical to System 3 with the exception of using the smallest possible supply and exhaust fans.

In each of the four systems described above the exhaust structures on the deck would incorporate two propeller fans. On the two long decks, the structures could be combined into one structure with twice the opening in the deck. These were not proposed because the required opening sizes seemed excessive.

Design Criteria

This study includes analysis of ventilation for 15, 30, 45, and 60 minute exposure times, however the equipment configuration and cost proposals were completed for the 15 minute exposure. This was chosen as an exposure level that was reasonable but not necessarily optimal air quality for the worst scenario.

Higher exposure limits and shorter exposure times were considered, for several reasons:

- The analysis included the most critical conditions. In winter and with all lanes full and no movement in either direction. Ventilation requirements would be reduced each time the traffic moves forward in either direction.
- The air quality in the trench is the same in the absence of wind and traffic movement, whether the deck is installed or not. We were proposing to improve the air quality above what would be experienced in an abnormal condition, and not try to bring the air quality up to sidewalk acceptable levels.
- For any open highway, in winter, with no wind and stalled traffic, the CO level could be higher than 120 ppm. While we could design infrastructure to improve the air quality for the subject traffic way above that of an open highway, it is our position that this is not reasonable. We recommend that incident management procedures be established to arrange for clearing of at least one lane of obstruction and moving of vehicles after one hour of traffic stoppage.

- The US Code of Federal Regulations (CFR) Occupational Safety and Health Standard, Subpart Z, sets contaminant levels for 8-hour time-weighted average exposure to carbon monoxide (CO) at 50 ppm.

Based on City recommendations, carbon monoxide (CO) levels will be maintained below 35 parts per million (PPM), the USDOT/USEPA guideline for 60-minute exposure.

Code Application

NFPA 502 (1998) provides fire protection and fire life safety standards for limited access highways, road tunnels, bridges, elevated highways, depressed highways, and roadways underneath air-right structures. Section 4-2 of this standard requires that where the tunnel length is between 300 feet and 800 feet, standpipe and traffic control systems shall be installed in accordance with Chapter 6 of the standard. Section 4-2 also requires where the tunnel length exceeds 800 feet, a fire ventilation system complying with Chapter 7 of the standard applies. For tunnels 300 feet long or less, the provisions of NFPA 502 do not apply. For this analysis we have assumed that each decked area constitutes a separate tunnel, 300 ft. long or less and therefore NFPA Standard 502 does not apply. Should the local governing authority decide that the four sections be treated as one continuous tunnel, this analysis would not be valid and the costs would escalate dramatically.

The EPA's 1975 supplement of *Guidelines for Review of Environmental Statements for Highway Projects* resulted in a design approach based on keeping a CO concentration of 125 ppm or below for a maximum of one hour time for tunnels. In 1988 the maximum CO levels for tunnels below 5000 ft. was revised to the following:

- Maximum 120 ppm for 15 min. exposure time
- Maximum 65 ppm for 30 min. exposure time
- Maximum 45 ppm for 45 min. exposure time
- Maximum 35 ppm for 60 min. exposure time

These EPA concentration levels do apply to this project and our analysis is based on the 15-minute exposure. Currently, there is no code governing body claiming jurisdiction for this project. If the Ohio Department of Transportation or other jurisdiction standards should apply, this should be established prior to proceeding with design.

Engineering Analysis

Ventilation is required to prevent noxious fumes from building up in the roadway creating a hazardous environment for motorists. These fumes include carbon monoxide (CO), volatile organic compounds (VOC) and oxides of nitrogen (NO_x). The exhaust gas constituent of greatest concern from vehicle engines is CO, because of its asphyxiating nature and quantity produced in automobile emissions. Idling vehicle emissions were determined from the Environmental Protection Agency (EPA), (reference App. 1.B, Vehicular Emissions Chart). Due to the molecular properties of CO, the gas will not rise up quickly into the atmosphere. Since CO is the primary gas emission from the vehicles analyzed; our analysis will focus on calculating the ventilation required to dilute the CO concentration according to the EPA guidelines. By calculating the dilution ventilation for CO, this will satisfy the dilution requirements of other emissions. Our analysis will be restricted to winter emissions since this is the worst case for vehicular emissions (reference App. 1.B, Vehicular Emissions Chart). The entire length between the covered sections is 1400 feet. For calculation purposes this distance will be used to determine the dilution ventilation required to minimize CO concentration levels. The equation used to determine the dilution ventilation is derived from the material balance equation (Industrial Ventilation Manual, 22nd Edition, Ch. 2, "General Ventilation"):

Rate of Accumulation = Rate of Generation – Rate of Removal

Assuming a constant concentration and uniform generation rate the ventilation, V, can be solved using the equation:

$$V = (k * R) / C$$

where

k = mixing efficiency factor, unitless
R = Rate of generation, grams per minute
C = Concentration of gas, grams per cubic foot
V = dilution ventilation, cubic feet per minute

(See App.1.A, Sample Calculation for Dilution Ventilation)

The mixing efficiency factor, k, ranges from 1 to 10 (1 being ideal) depending on several considerations:

1) The efficiency of mixing and distribution of replacement air introduced in the space being ventilated.
2) The toxicity of the contaminant.
3) Duration of the process.
4) Location and number of points of fume generation.

For the proposed systems to follow, the k factor ranges from 2 to 3. App. 2.B, Dilution Ventilation Chart, shows the dilution ventilation required for different k factors and the different exposure times. Our proposed systems are based on a 15-minute exposure time.

Proposed Systems

System 1 – Longitudinal Ventilation with Supply & Exhaust

This system proposes mounting axial jet fans to the underside of the decking promoting longitudinal ventilation at the corners with fans directed toward the center of the decked area along the roadway. This system also requires six propeller fan housing structures each with two propeller fans and each structure with 200 square feet of deck opening. The size and location of the jet fans must maintain the clearance required for the roadway. This system has a mixing efficiency factor, k, of 3 requiring 2,400,000 total CFM. Reference schematic drawing C-1.

System 2 – Semitransverse Ventilation with Exhaust only

System 2 proposes mounting fans on the concrete deck to exhaust the air from below the deck. This system would require 6 separate fan housing structures each with two propeller fans and each structure with 110 square feet of penetrations through the concrete deck as in System 1. In addition to the exhaust fans above the deck, there are axial jet fans and intake ductwork to more efficiently capture the exhaust in the occupied area. This reduces the total amount of air required for exhaust and reduces the structural opening size in the deck. This system has a mixing efficiency factor, k, of 2.5 requiring 2,000,000 total CFM. Reference schematic drawing C-2.

System 3 – Semitransverse Ventilation with Supply and Exhaust

System 3 proposes mounting propeller fans on the concrete deck to exhaust air from below the deck. This system would require six separate fan housing structures each with two fans and each structure with 132 square feet of penetrations through the concrete deck similar to Systems 1 & 2. In addition to the exhaust fans above the deck, there are axial jet fans and supply ductwork to supply fresh air in the occupied area. The supply fans would have ductwork located near the road surface to supply air at the roadway. By supplying air directly into the space from fans, less air is needed to exhaust the space. The exhaust inlets are on the underside of the concrete decking. The mixing efficiency factor, k, for this system is 2 requiring 1,600,000 total CFM of exhaust. Reference schematic drawing C-3.

System 4 – Semitransverse Ventilation with Smallest Supply and Exhaust

System 4 proposes mounting propeller fans on the concrete deck to exhaust air from below the deck. This system would require eighteen (18) separate fan housing structures each with two fans and each structure with 48 square feet of penetrations through the concrete deck similar to Systems 1, 2 & 3. In addition to the exhaust fans above the deck, there are axial jet fans and supply ductwork to supply fresh air in the occupied area. The supply fans would have ductwork located near the road surface to supply air at the roadway. By supplying air directly into the space from fans, less air is needed to exhaust the space. The exhaust inlets are on the underside of the concrete decking. The mixing efficiency factor, k, for this system is 2 requiring 1,600,000 total CFM of exhaust. Reference schematic drawing C-4.

For further information on the cost breakdown of labor and material reference Appendix D.

Tunnel Length and NFPA

Below 300 feet, tunnel ventilation and life system support systems are relatively minor and inexpensive both to install and to maintain. For tunnels between 300 feet and 800 feet, there is a substantial elevation in the ventilation and life safety requirements. For tunnels over 800 feet, there is a further substantial elevation in requirements. By maintaining the tunnel segments at 300-feet or less, the requirements of NFPA 502 (1988) should not apply and therefore greatly reduces the cost of the deck-over of Fort Washington Way. However, this would need to be verified by the local governing authority, which may come to a different conclusion.

Make-Up Air Quality

The January ventilation study assumes fresh air make-up contains little or no CO. While it is true that due to its proximity to the roadway, this air will likely contain CO, the background levels at Fort Washington Way have not yet been established. This would be included in the final

design. A rough budget for 120 ppm was used. Not including background carbon monoxide has little impact on that budget.

Ambient Air Quality Above The Decks

The air quality will be affected but not unacceptably. The final design would include an analysis of the sidewalk air, but the analogy is that no more contaminants are being generated with decking and with the fans on than is generated without decking and no fans. Then the air quality at the sidewalk will be the same or better (more than current dilution) after the decking and ventilation are added as it is now without the decking and no ventilation.

The decking project study indicates that exhaust is directed upward at a high velocity, where the wind will assist in the dilution of the exhaust air. The air adjacent to the upward exhaust streams is induced to follow the high velocity air stream. This creates a continuous inflow of fresh air behind the exhaust to replace the air that is induced.

The air quality at the walking surfaces adjacent to the ventilation fans and adjacent to the highway is expected to be similar to sidewalks in urban areas. In Cincinnati, similar conditions exist where sidewalk grating is used for discharge of underground parking, and at public benches where exhaust air is discharged.

Ventilation System Recommendation

Of the proposed systems, normally the least expensive would be the recommended system. However, in this case the structural openings may govern. Without knowing the actual limit of the structural openings, we recommend System 3, which has smaller structural openings, is approximately the same cost as System 2, and provides the most positive ventilating with the most uniform air quality due to the supply air at the lower level.

OTHER DESIGN ISSUES

This report addresses the primary issues relating to the future decking over of the Fort Washington Way trench. They are as follows:

- Structural Requirements
- Fire Protection Requirements
- Lighting Requirements
- Signage Requirements
- Life Safety and Emergency Egress
- Snow Removal (above and below)
- Maintenance Provisions
- Air Rights (if any)

These issues have been reviewed and addressed and are covered in the following sections of this report.

Structural Requirements

The design of the decks over Fort Washington Way is based upon precast concrete box girders similar to those used on the bridges at Elm, Race, Vine, Walnut and Main. This design allows erection at night over the closed freeway with little disruption of local traffic. However, the proposed ventilation systems require openings in the deck for extraction of air below and this presents structural and aesthetic challenges.

The design of the decking will be similar to the new bridges, including HS-20 loading. This loading will accommodate soil for planters and trees, for parking, if desired, and for structures such as kiosks, shelters and other softscape, hardscape and greenscape. Drainage will need to pass through the deck to the Fort Washington Way drainage system below.

Fire Protection Requirements

As stated previously, the length of the tunnel to be considered has a large bearing on the scope and cost of the systems required.

Tunnels Length and NFPA

For tunnel segments less than 300 feet in length, the requirements of NFPA 502 (1988) generally do not apply. There would be no requirements for fire protection other than that which is required by normal interstate incident management procedures. However, if the local governing authority determine otherwise, the requirements of NFPA 502 (1988) would dramatically increase the costs of this project due to requiring a standpipe and traffic control system.

For a continuous deck that is between 300 and 800 feet in length, NFPA 502 does apply. This would require this decked area to have a standpipe and to have traffic control means to prevent the entry into the tunnel upon detection of fire. This option does not require Fire Emergency Ventilation. However, the additional length increases the concern for air quality, and additional ventilation has been added to improve air quality to dilute carbon monoxide to 35 ppm per the ODOT recommendations for tunnels.

We would point out that for all options further review of NFPA 502 indicates a requirement that any structure built on the deck will have to have a four hour fire rating unless bulk flammable liquids and other hazardous materials are prohibited on the roadway below the deck. This requirement needs to be noted if there is, or likely to be, an intent to erect structures on the Fort Washington Way deck.

Lighting Requirements

There will likely be a need for transition lighting as is usual in tunnels at the tunnel entrance and exit. Providing openings in the deck-over will create some difficulties in lighting due to the intermittent areas of daylight created by these openings. Tunnel lighting technology has advanced considerably in recent years and developing a satisfactory lighting system to cope with the intermittent daylight areas should not provide an unusual challenge. However, lighting costs will increase due to increased complexity, which will impact first costs, and extended continuous usage, which will increase operating costs.

Signage Requirements

The deck-over is designed to provide similar headroom as the cross-bridges i.e., 16-feet minimum. This will create challenges by removing the opportunity for overhead signage. Signage within the tunnel segments can only be shoulder-mounted and this creates problems

for use of the shoulder for broken down vehicles or detours. Signage to the approaches to the deck-over section of Fort Washington Way will have to be increased. Where the gaps between decks remain, there would be opportunity for lane signs on the cross-bridges, but their visibility period will be very short. This is similar to the current sign problems on the Brent Spence Bridge on the lower level.

Life Safety and Emergency Egress

Two options for access to the Fort Washington Way trench have been reviewed. One option is to access or leave the Fort Washington Way trench by use of the existing ramps at either end. Full shoulders have been provided for incident management in the trench and on the approach ramps. Another option is to provide additional emergency access ramps. This would entail creating a permanent ramp with removal barrier rail at the Fort Washington Way level. A review of available barriers has found none that could be removed quickly and easily and still provide crashworthiness on a daily basis.

The installation of the deck-over to the Fort Washington Way trench would reduce the areas where emergency service could be lowered into the trench along Second and Third Streets and where people in the trench could be lifted out. However, with the gaps in the deck-over at either side of the cross-bridges, lifting equipment on the Platform Bridges at Race, Vine and Walnut Streets could be used to provide emergency ingress and egress. The maximum distance from these points is only approximately 150-feet.

Other than the above restrictions to access from above, deck-over of the Fort Washington Way trench does not present any additional challenges to Life Safety and Emergency Egress to the existing Fort Washington Way trench.

Snow Removal

A deck over of a large area would obviously reduce snow removal in the trench. The degree to which removal of snow and the deck over the Fort Washington Way trench presents problems would depend on a number of issues, such as difference in elevation of the top of deck to the existing Second and Third Streets, (basis of current design of foundations is that the streets and the deck would be at similar elevations), and the extent of hardscape/softscape/landscape development on the deck. However, this should not be different than snow removal at Fountain Square or other public spaces.

Maintenance Provisions

Maintenance provisions will obviously be more extensive due to the ventilation and additional lighting requirements. The ventilation systems can be designed for low maintenance operations since the systems would only operate when there is sufficient build-up of carbon monoxide (CO) in the trench. This is only likely to happen in the event of an accident or other hold-up that causes all traffic vehicles to come to a halt and idle in the trench.

Sensors will determine when CO levels reach the prescribed limits and activate the ventilation systems. During normal traffic, the piston effect of the traffic moving through the tunnel segments will be sufficient to maintain airflow for ventilation purposes.

Lighting maintenance will be more extensive, but with the lighting mounted at the retaining walls and center pier, access should not be a major problem. With four full lanes plus two shoulders in each direction, it will be possible to close a shoulder and a lane during non-peak hours and do maintenance work during the day.

Air Rights

This will be a matter for the City to negotiate with ODOT and the FHWA. We have not ascertained any requirements those jurisdictions may impose. The design of the deck will support a commercial office building up to four stories high, if that type of development was ever envisaged. The deck will support hardscape/softscape/landscape normal to a public plaza including planters and trees of a size normally associated with a city streetscape. There would be no difficulty supporting kiosks and similar housings. The deck design will support up to 4-feet of saturated soil in a planter on any area of the deck.

DECK CONFIGURATION OPTIONS

Deck Configuration Option A – Original Fort Washington Way Configuration

This original option proposed to deck over Fort Washington Way from mid-point Elm-to-Race to Race Street, from Race to Vine, from Vine to Walnut and from Walnut to mid-point Walnut-to-Main. Gaps of approx. 25-feet on either side of the existing bridges were included. This is two city blocks plus two half-city blocks. This option is the basis for the pile layout in place on Fort Washington Way. This results in two tunnels of approximately 170 feet (50m), and two tunnels of approximately 300 feet (90m). This option was the basis for all previous design decisions. The 25-foot openings minimize the requirements for ventilation. The addition of pedestrian footbridge access across the 25-foot space between street bridge and deck at all four corners at the intersections of the North/South streets was suggested to enhance the overall urban design.

The footbridge loads at the bridges and the decks are acceptable provided permanent, not removable, bollards are installed to prevent any vehicular use of the footbridges.

The footbridges would reduce the area of the space between the bridge and deck. The available space for pedestrian bridges at the corners of the decks is 150-feet x 25-feet = 3,750 sq. ft. A reduction of this space by 600 sq. ft. can be tolerated without adverse impact on the ventilation systems. This will permit a 25-foot x 12-foot (300 sq. ft.) pedestrian bridge at each corner. These bridges will require no modification to the mechanical/electrical systems although the pedestrian bridges themselves will add to the project cost.

Detailed cost estimates for the updated ventilation systems as well as other cost calculations are included in appendix D.

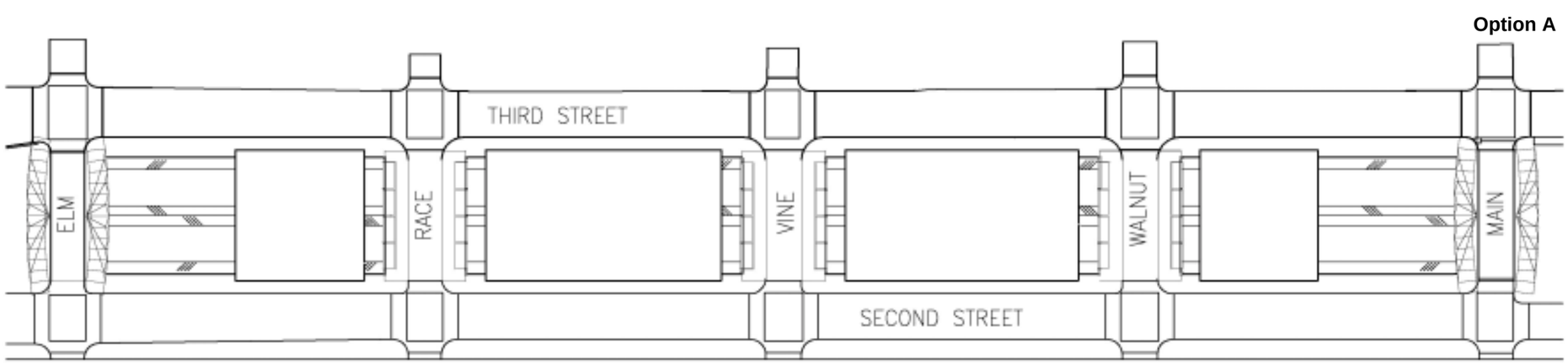

Deck Configuration Option B – Continuous Deck at Vine Street

This option closed the 25-foot gaps between the Fort Washington Way deck and the bridge at Vine Street. This results in a continuous tunnel of approximately 775 feet (235m). There are several difficulties in extending the deck structure. Foundations for the deck as originally proposed were installed during the construction of the Fort Washington Way in order to reduce the cost and immense disruption to the Central Business District in installing these foundations later. Option B requires the extension of the foundations for 25-feet either side of the Vine Street bridge. A large section of the mainline freeway will be reduced to two lanes in each direction during construction. At street level, there will be considerable disruption. Due to the large number of utilities at the intersections, it will require extensive utility relocation just to create room for the foundations. Pile driving operations will be disruptive. However, these disruptions while extensive and expensive, will be restricted to the Vine Street area.

A tunnel of this length would require a substantially more elaborate ventilation system to meet the higher requirements of the FHWA and NFPA. Additionally this configuration would require this decked area trench to have a standpipe, and to have traffic control means to prevent the entry into the tunnel, upon detection of fire. The proposed deck over Fort Washington Way may have to be raised to accommodate the enhanced ventilation system. There would be the additional costs of raising the pile caps to provide this increased headroom. Raising the decks above the current street level would create access difficulties for pedestrians from Second and Third streets and at the bridges.

The standpipe would be a dry standpipe installed per NFPA 14. This standpipe would have two fire department pumper connections located at either end of the tunnel near hydrants on Third Street, a 4” supply pipe under the decked area structure, and have drops to 2-½” valves every 200 feet at the roadway.

The traffic control system shall consist of a means of stopping traffic from entering the tunnel following activation of the fire alarm in the tunnel. This would include traffic control lights at each entrance, which would be located outside the shorter tunnels to allow sufficient field of view.

This option does not require fire emergency ventilation, however the additional length increases the concern for air quality, and additional ventilation has been added to improve air quality to dilute carbon monoxide to 34 ppm per the ODOT recommendations for tunnels. For tunnels under 300 feet, the provisions of NFPA 502 do not apply.

Detailed cost estimates for the updated ventilation systems as well as other cost calculations are included in appendix D.

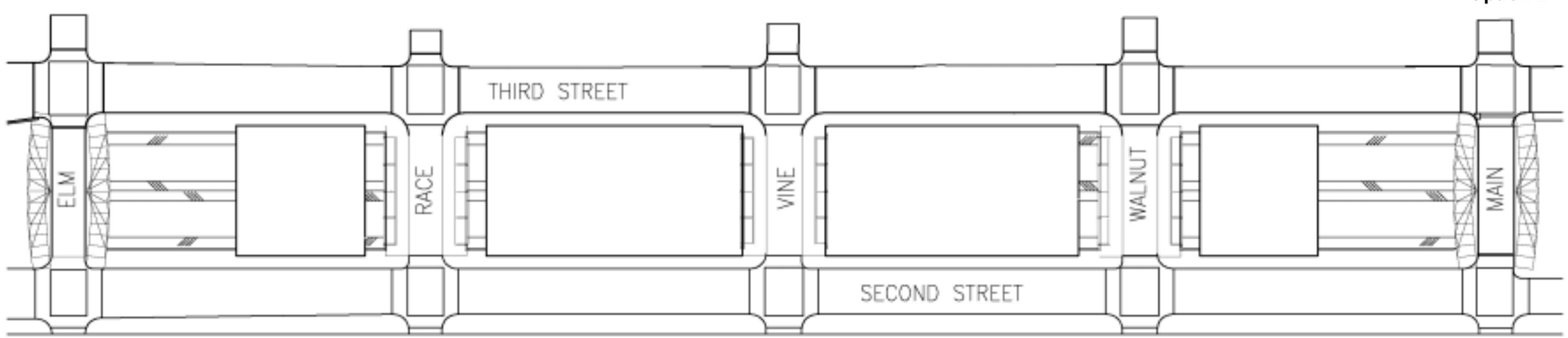

Deck Configuration Option C – Continuous Deck from Race to Walnut

This option closed the 25-foot gaps between the Fort Washington Way deck and the bridges at Race, Vine and Walnut streets. This results in a continuous tunnel of approximately 1400 feet (430m).

The disruption to the CBD described in Option B will be extended over a much longer area unless the work is done one intersection at a time. This will extend the duration of the disruption. The disruption to Fort Washington Way traffic will also be compounded.

This option increases ventilation requirements due to FHWA and NFPA provisions for tunnels over 800 feet in length. The proposed deck over Fort Washington Way would have to be raised 4-feet to accommodate the enhanced ventilation system. There will be the additional costs of raising the pile caps by 4-feet to provide this increased headroom. Raising the decks 4-feet will create access difficulties for pedestrians from Second and Third streets and at the bridges.

NFPA also requires Fire Detection in tunnels without 24-hour supervision, Communications systems, Fire Emergency Ventilation, and primary and secondary power supplies in addition to the standpipe and traffic control described in Option B above.

The fire detection system shall have at least two means of detection including one manual. The manual system would be fire alarm boxes located not more than 300 feet intervals. The automatic system can be CCTV sending a signal to a 24 hour monitored location. A rate of rise heat detection system can be used if the tunnel is not monitored 24 hours a day.

The communications system shall consist of a highway advisory radio (HAR) and AM/FM commercial station overrides, to provide instructions to motorists in real-time voice communications in addition to prerecorded messages.

The fire emergency ventilation system shall consist of reversible supply and exhaust fans. This system shall provide dilution ventilation for air quality during non-fire conditions, and smoke control in the event of a fire. The smoke control shall exhaust high in the tunnel to minimize disruption of stratification. This system will require more space to accommodate the ductwork, which requires the decking to be raised four feet. Structural modifications for this option will add to the project cost.

Due to the complexity and cost associated with these requirements, this option is not recommended for implementation. Detailed cost estimates for the updated ventilation systems as well as other cost calculations are included in appendix D. The attached estimate assumed a 900-foot tunnel. The complete decking of 1400 feet would be proportionately more expensive.

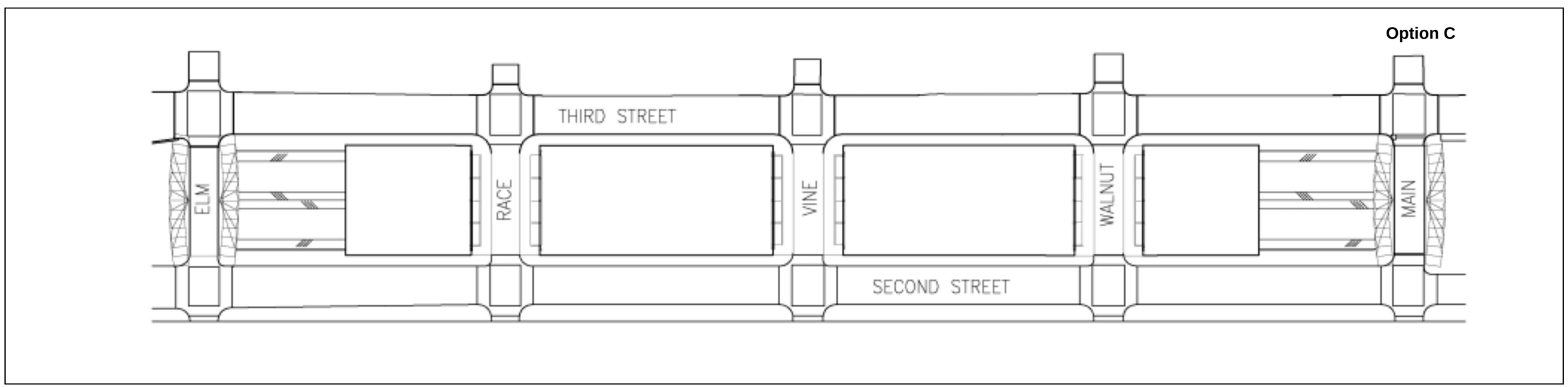

CONCLUSION

The decking over of portions of the Fort Washington Way trench is a viable option for the City in providing more extensive public use of the area between Second Street and Third Street. Installing the foundations during the Fort Washington Way Reconstruction project greatly facilitates the exercise of this option. By using a precast girder design similar to the new cross-bridges, the construction of the deck at some future time can be done with little disruption to the life of the CBD and to traffic in the Fort Washington Way trench.

Installing the deck will require the removal of at least the inner row of trees along Second and Third Streets, the removal of the precast barrier and the trench light poles and saw cutting approximately 2-feet from the top of the retaining walls. On completion of the deck, the trees and pavers can be reinstalled and the trench light poles re-erected.

Selection of a particular system will be determined at the time of final design and construction from the best perceived balance between ventilation efficiency, structural limitations, aesthetics, maintenance, and overall costs.

APPENDIX A

Calculations

SAMPLE CALCULATION FOR DILUTION VENTILATION

Covered Roadway

Overall length for calculation purposes = 1400 ft.
Width = 147 ft. for cross sectional area
Height = 18 ft.

Dilution Ventilation (V, cubic feet per minute)

$$V = (k * R) / C$$

where

k = mixing efficiency factor, unitless
R = Rate of generation, grams per minute
C = Concentration of gas, grams per cubic foot

Generation of Fumes

R = 3412 g/min (reference App. 2.B, Dilution Ventilation)

Mixing Factor

Assume k value of 2

Concentration

At 65 ppmv for 30 min. exposure:

$$C = ppmv = 0.6699(mg/m^3)(459.7 + t) / Mp$$

$$mg/m^3 = ppmv * Mp / [0.6699(459.7 + t)]$$

where

0.6699 = gas constant in hybrid units
M = molecular mass of contaminant = 28 for CO
p = mixture absolute pressure, psia
t = mixture temperature, °F

At 14.7 psia and 30°F,

$$C = (65*28*14.7) / [0.6699(459.7 + 30)]$$
$$C = 81.55\ mg/m^3$$
$$C = 0.002309021\ g/ft^3$$

$$V = (2 * 3412) / 0.002309021$$
$$\underline{V = 2{,}955{,}365\ CFM}$$

APPENDIX B

Charts

Vehicular Emissions Chart

VEHICLE TYPE	VEHICLES LENGTH ft	VEHICLES ALLOCATED LENGTH ft	LANE LENGTH ft	VEHICLE COUNT LANE	VEHICLE COUNT LANES	VEHICLE COUNT TOTAL	WINTER EXHAUST EMISSIONS PER VEHICLE VOC g/min	CO g/min	NOx g/min	TOTAL WINTER EXHAUST EMISSIONS VOC g/min	CO g/min	NOx g/min	ASSUMED VEHICLE %	VEHICLE COUNT	CO Rate of Fumes (g/min.)
A	**B**	**C**	**D**	**E**	**F**	**G**	**H**	**I**	**J**	**K**	**L**	**M**	**N**	**O**	**P**
GAS VEHICLES															
Passenger vehicles	16	20	1400	70	8	560	0.352	6.190	0.103	197.120	3466.400	57.680	80	448	2773
Truck / Sport Utility	18	22	1400	64	8	512	0.512	8.120	0.125	286.720	4547.200	70.000	15	77	624
Shuttle Van	20	24	1400	59	8	472	0.734	11.400	0.196	411.040	6384.000	109.760	0	0	0
DIESEL VEHICLES															
Bus	40	44	1400	32	8	256	0.211	1.580	0.945	118.160	884.800	529.200	1	3	4
18 Wheel Truck/Trailer	60	64	1400	22	8	176	0.211	1.580	0.945	118.160	884.800	529.200	4	7	11
													Total Emissions		**3412**

NOTES:

Column	Description
B.	Average vehicle length (Architectural Graphic Standards, 9th edition)
C.	Based on 2 feet front/rear between cars when not moving (American Society of Heating, Refrigerating and Air Conditioning Engineers Handbook, 1995 edition, Ch. 12, Table 1)
D.	Length of each lane including covered and uncovered sections.
E.	Maximum number of vehicles per lane (D divided by C)
G.	Maximum number of vehicles in 8 lanes (E multiplied by F)
H., I., J.	Idling vehicle emissions, grams per minute at 30 deg. F: VOC - volatile organic compounds, CO - carbon monoxide, NOx - oxides of nitrogen (EPA 420 -F-98-014, April 1998) Only the winter emissions are being considered since that is the worst condition.
K., L., M.	Total winter emissions (G multiplied by H, I, J respectively)
N.	Assumed percentage of vehicle type in the roadway.
O.	Assumed percentage (column N) multiplied by total vehicles (column G)
P.	Number of vehicles (column O) multiplied by CO emissions (column I)

Chart 1-B

Dilution Ventilation Chart

Covered Roadway Ventilation

$$V = (kR) / C \quad (1)$$

k - Mixing Efficiency Factor, unitless
C - Concentration (g / ft^3)
R - Rate of CO generation, 3412 g/min - Chart 1
V - Dilution Ventilation (ft^3 / min.)

Allowable Concentration @ 30 F, (2)			**Ventilation @ k = 2, (4)**	**Ventilation @ k = 2.5, (4)**	**Ventilation @ k = 3, (4)**
	(ppmv)	(g/ft^3), (3)	(CFM)	(CFM)	(CFM)
Max. for 15 min. exposure time	120	0.004262809	1,600,823	2,001,028	2,401,234
Max. for 30 min. exposure time	65	0.002309021	2,955,365	3,694,206	4,433,047
Max. for 45 min. exposure time	45	0.001598553	4,268,860	5,336,075	6,403,290
Max. for 60 min. exposure time	35	0.001243319	5,488,534	6,860,668	8,232,801

Notes
1. Industrial Ventilation Manual, 22nd Edition, Ch. 2, "General Ventilation", p. 2-5
2. ASHRAE Applications 1999, Ch. 12, "Enclosed Vehicular Facilities", p. 12.5
3. Conversion from ppmv.
4. Values based on V = (kR) / C equation.

Chart 2-B

APPENDIX C

Schematic Drawings

PARSONS BRINCKERHOFF

Parsons Brinckerhoff
1831 Chestnut Street Telephone: (314)421-1476
St. Louis, Missouri 63101-2225 Telefax: (314)421-1741

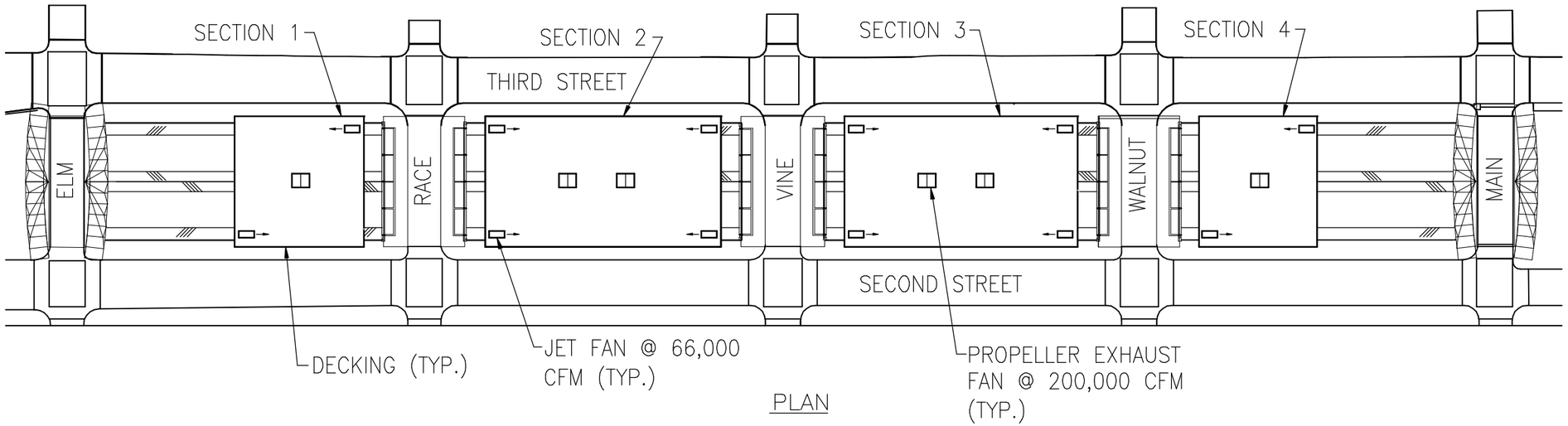

PLAN

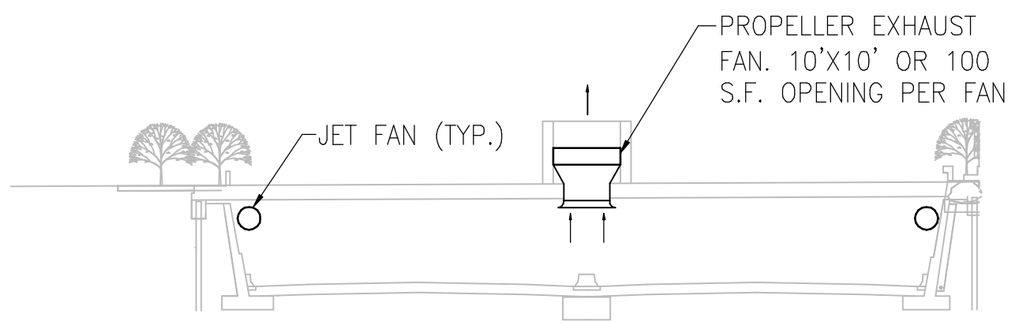

SECTION

SYSTEM 1 – LONGITUDINAL VENTILATION WITH SUPPLY & EXHAUST

15–MINUTE EXPOSURE, 120 PPMV
NOT TO SCALE

PROJECT: FORT WASHINGTON WAY	DRAWN: KEW	NO.	
PROJECT NO: 28907D	CHKD: ABD	C-1	
	DATE: 01/22/01		

PARSONS BRINCKERHOFF

Parsons Brinckerhoff
1831 Chestnut Street Telephone: (314)421-1476
St. Louis, Missouri 63101-2225 Telefax: (314)421-1741

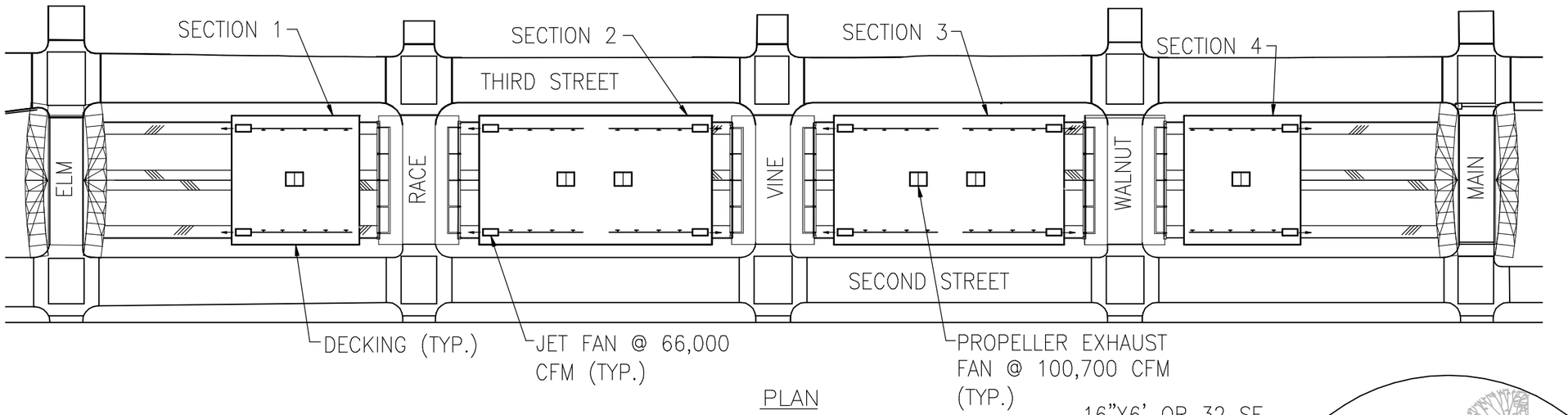

PLAN

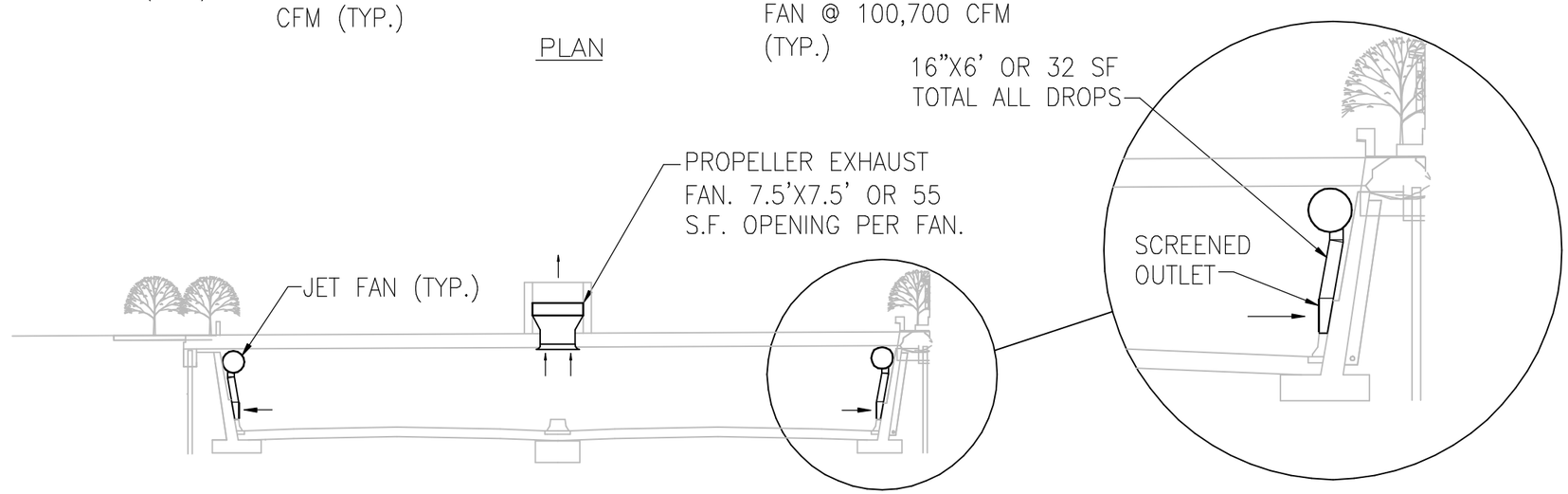

SECTION

SYSTEM 2 – LONGITUDINAL VENTILATION WITH EXHAUST ONLY

15–MINUTE EXPOSURE, 120 PPMV
NOT TO SCALE

PROJECT: FORT WASHINGTON WAY	DRAWN: KEW	NO.	
PROJECT NO: 28907D	CHKD: ABD	C-2	
	DATE: 01/22/01		

PARSONS BRINCKERHOFF

Parsons Brinckerhoff
1831 Chestnut Street Telephone: (314)421-1476
St. Louis, Missouri 63101-2225 Telefax: (314)421-1741

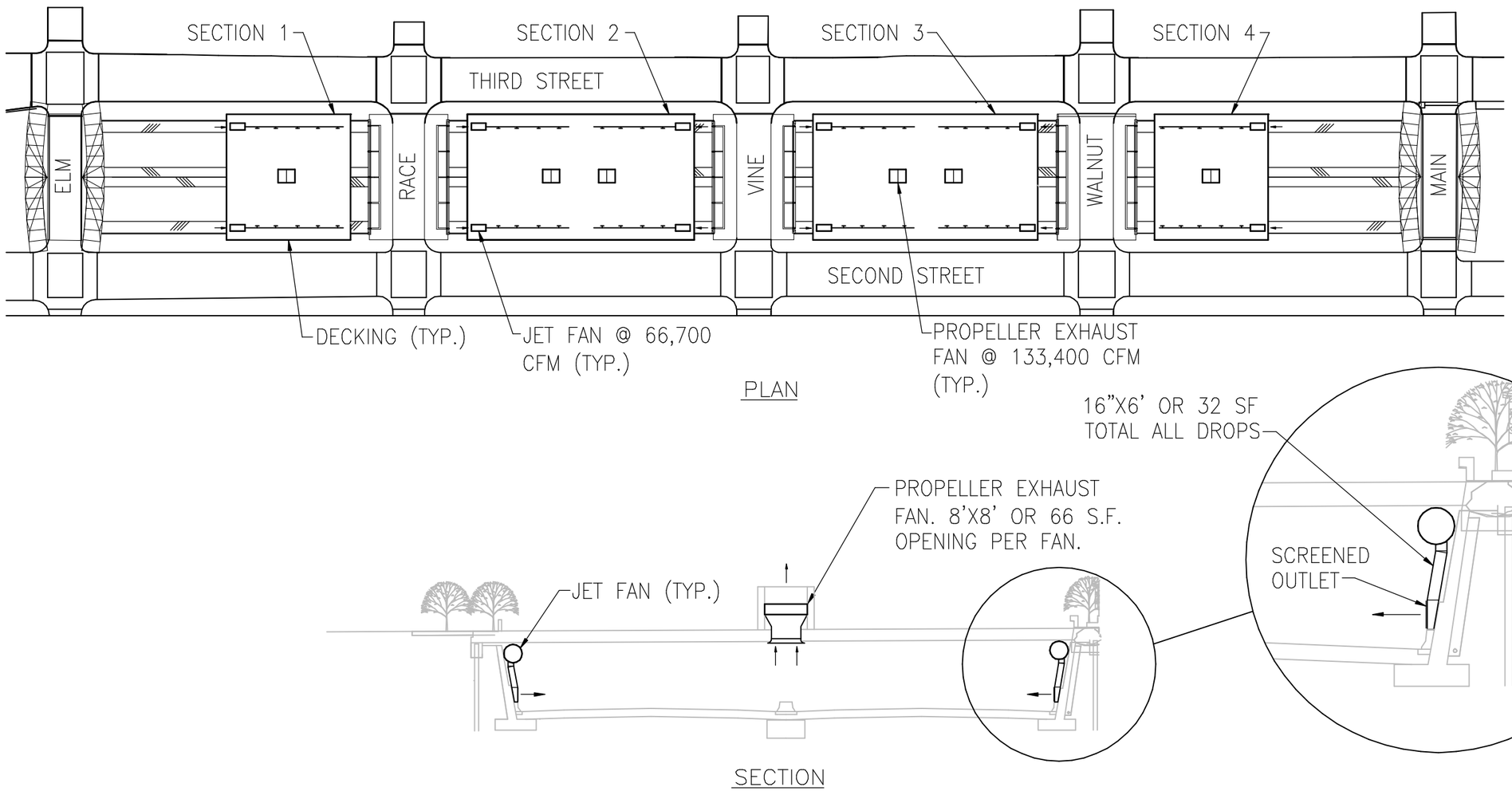

SYSTEM 3 – SEMITRANSVERSE VENTILATION WITH SUPPLY & EXHAUST

15–MINUTE EXPOSURE, 120 PPMV
NOT TO SCALE

PROJECT: FORT WASHINGTON WAY	DRAWN: KEW	NO.
PROJECT NO: 28907D	CHKD: ABD	C-3
	DATE: 01/22/01	

PARSONS BRINCKERHOFF

Parsons Brinckerhoff
1831 Chestnut Street Telephone: (314)421-1476
St. Louis, Missouri 63101-2225 Telefax: (314)421-1741

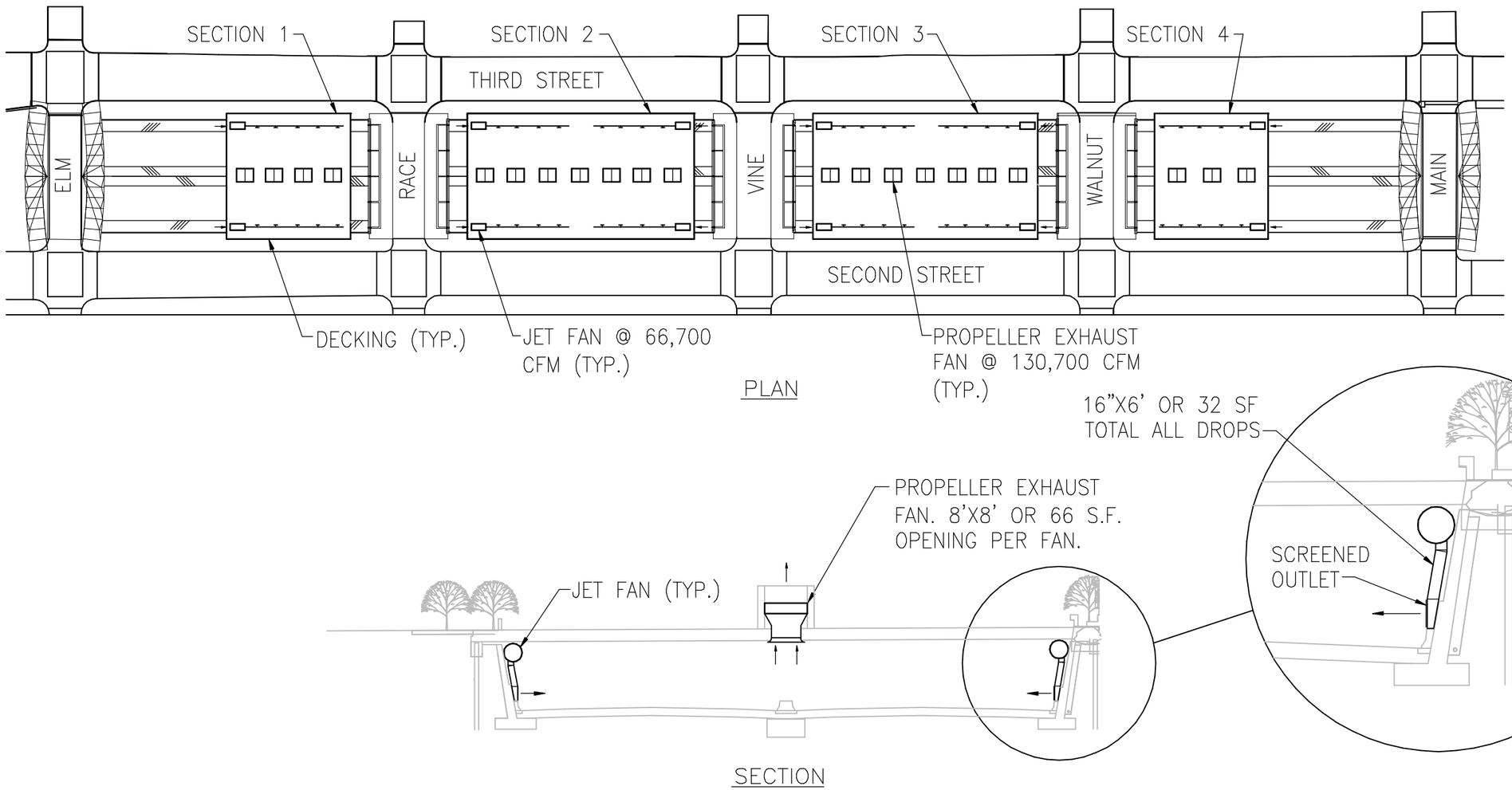

SYSTEM 3 – SEMITRANSVERSE VENTILATION WITH SUPPLY & EXHAUST

60–MINUTE EXPOSURE, 35 PPMV
NOT TO SCALE

PROJECT: FORT WASHINGTON WAY	DRAWN: KEW	NO.	
PROJECT NO: 28907D	CHKD: ABD	C-3A	
	DATE: 01/22/01		

PARSONS BRINCKERHOFF

Parsons Brinckerhoff
1831 Chestnut Street Telephone: (314)421-1476
St. Louis, Missouri 63101-2225 Telefax: (314)421-1741

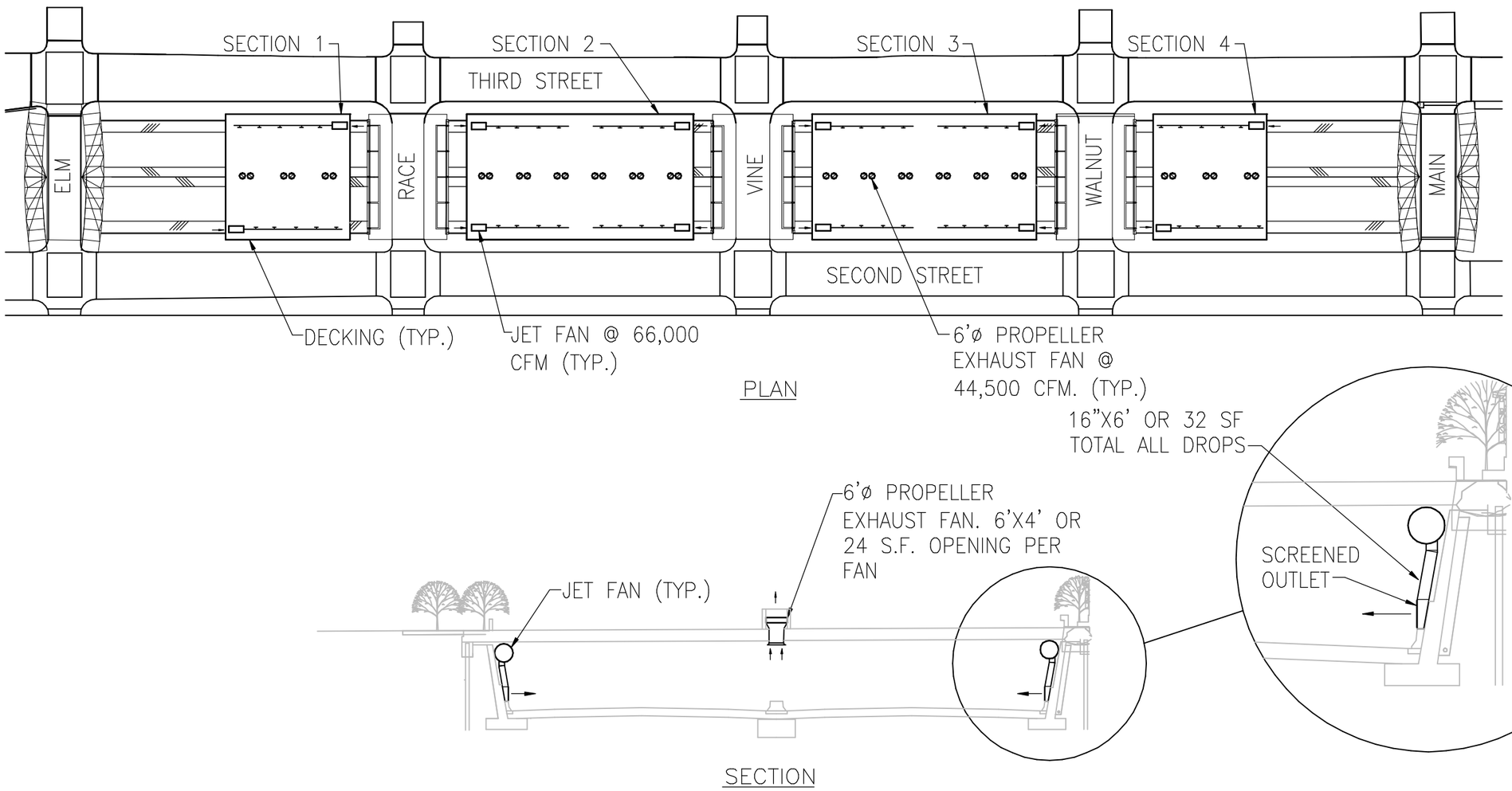

SYSTEM 4 – SEMITRANSVERSE VENTILATION WITH SMALLEST SUPPLY & EXHAUST

15–MINUTE EXPOSURE, 120 PPMV
NOT TO SCALE

PROJECT: FORT WASHINGTON WAY	DRAWN: KEW	NO.	
PROJECT NO: 28907D	CHKD: ABD	C-4	
	DATE: 01/22/01		

APPENDIX D

Cost Estimates

Ventilation System 3 - Semitransverse Ventilation With Supply And Exhaust
60-Minute Exposure, 35 ppm
Configuration A - Original Fort Washington Way Decking

Block 1		
Deck - 170 ft x 150 ft x $120/sf	=	$ 3,060,000
Pedestrian Footbridge - 2 @ $50,000 each	=	$ 100,000
Ventilation System	=	$ 579,150
Fire Protection System	=	$ 0
Total Block 1	=	$ 3,739,150
Block 2		
Deck – 300 ft x 150 ft x $120/sf	=	$ 5,400,000
Pedestrian Footbridge – 4 @ $50,000 each	=	$ 200,000
Ventilation System	=	$ 1,044,900
Fire Protection System	=	$ 0
Total Block 2	=	$ 6,644,900
Block 3		
Deck – 300 ft x 150 ft x $120/sf	=	$ 5,400,000
Pedestrian Footbridge – 4 @ $50,000 each	=	$ 200,000
Ventilation System	=	$ 1,044,900
Fire Protection System	=	$ 0
Total Block 3	=	$ 6,644,900
Block 4		
Deck - 170 ft x 150 ft x $120/sf	=	$ 3,060,000
Pedestrian Footbridge - 2 @ $50,000 each	=	$ 100,000
Ventilation System	=	$ 465,750
Fire Protection System	=	$ 0
Total Block 4	=	$ 3,625,750
TOTAL	=	$ 20,654,700

Ventilation System 3 - Semitransverse Ventilation With Supply And Exhaust
60-Minute Exposure, 35 ppm
Configuration B – Continuous Deck at Vine Street

Block 1		
Deck - 170 ft x 150 ft x $120/sf	=	$ 3,060,000
Pedestrian Footbridge - 2 @ $50,000 each	=	$ 100,000
Ventilation System	=	$ 557,550
Fire Protection System	=	$ 328,500
Total Block 1	=	$ 4,046,050
Block 2		
Deck – 300 ft x 150 ft x $120/sf	=	$ 5,400,000
Deck for Gap – 25 ft x 150 ft x $120/sf	=	$ 450,000
Foundation for Gap	=	$ 263,500
Pedestrian Footbridge – 2 @ $50,000 each	=	$ 100,000
Ventilation System	=	$ 1,115,100
Fire Protection System	=	$ 657,000
Total Block 2	=	$ 7,985,600
Block 3		
Deck – 300 ft x 150 ft x $120/sf	=	$ 5,400,000
Deck for Gap – 25 ft x 150 ft x $120/sf	=	$ 450,000
Foundation for Gap	=	$ 263,500
Pedestrian Footbridge – 2 @ $50,000 each	=	$ 100,000
Ventilation System	=	$ 1,115,100
Fire Protection System	=	$ 657,000
Total Block 3	=	$ 7,985,600
Block 4		
Deck - 170 ft x 150 ft x $120/sf	=	$ 3,060,000
Pedestrian Footbridge - 2 @ $50,000 each	=	$ 100,000
Ventilation System	=	$ 449,550
Fire Protection System	=	$ 328,500
Total Block 4	=	$ 3,938,050
TOTAL	=	$ 23,955,300

Basis of Structural Cost Estimates

Pedestrian Footbridges

Structural Steel	25 ft x 12 ft x 50 lbs/sf x $2.50/sf	=	$ 37,500
Concrete Deck	25 ft x 12 ft x 0.5 ft ÷ 27 sf/cy x $850/cy	=	$ 4,722
Handrails	50 ft x $25/ft	=	$ 1,250
Bollards	4 @ $300 ea	=	$ 1,200
Contingency		=	$ 5,328
	Total	=	$ 50,000/ea

Deck for Gaps

Deck	$ 105/sf* x 15% (Contingency)	=	$ 120/sf

Foundation for Gaps

Abutments			
Forward	$1,200,000* ÷ 1,300 ft x 2 (complexity) x 15% (Contingency)	=	$ 2,123/ft
Rear	$1,200,000* ÷ 1,300 ft x 2 (complexity) x 15% (Contingency)	=	$ 2,123/ft
Center Pier	$3,555,000* ÷ 1,300 ft x 2 (complexity) x 15% (Contingency)	=	$ 6,290/ft
	Total	=	$10,540/ft

*Cost from Prior Fort Washington Way Construction

COST ESTIMATE WORK SHEET

Parsons Brinckerhoff
1831 Chestnut Street
St. Louis, Missouri 63103-2225
314/421-1467 Fax 314/421-5664

PROJECT
Fort Washington Way
Mechanical Cost
Schematic Design
Mechanical

PB PN	28907D
Sheet NO.	1.15.A
DATE	1/22/2001

SYSTEM 1 - LONGITUDINAL VENTILATION WITH SUPPLY & EXHAUST
15-MINUTE EXPOSURE, 120 PPMV
DECK CONFIGURATION A - ORIGINAL FWW

	✓	ITEM	QUANTITY		LABOR / INSTAL		MAT. / EQUIP.		TOTAL COST
			NO. UNITS	UNIT MEAS.	PER UNIT	TOTAL	PER UNIT	TOTAL	
1		**Fort Washington Way**							
2		**Covered Ventilation**							
3									
4		Propeller Fan	12	EA	$ 4,000	$ 48,000	$ 55,000	$ 660,000	$ 708,000
5		Housing	6	EA	$ 4,000	$ 24,000	$ 12,000	$ 72,000	$ 96,000
6		Jet Fan	12	EA	$ 4,000	$ 48,000	$ 30,000	$ 360,000	$ 408,000
7		Supports	12	EA	$ 2,000	$ 24,000	$ 2,000	$ 24,000	$ 48,000
8									
9		**Sub-Total**			$ 14,000	$ 144,000	$ 99,000	$ 1,116,000	$ 1,260,000
10									
11									
12		O&P	20%						$ 252,000
13		Contigency	15%						$ 189,000
14									
15		**Total Cost**							**$ 1,701,000**
16									
17									
18									
19									
20									
21									
22									
23									
24									
25									
26									
27									
28									
29									
30									
31									
32									
33									

COST ESTIMATE WORK SHEET

Parsons Brinckerhoff
1831 Chestnut Street
St. Louis, Missouri 63103-2225
314/421-1467 Fax 314/421-5664

PROJECT
Fort Washington Way
Mechanical Cost
Schematic Design
Mechanical

PB PN 28907D
Sheet NO. 2.15.A
DATE 1/22/2001

SYSTEM 2 - SEMITRANSVERSE VENTILATION WITH EXHAUST ONLY
15-MINUTE EXPOSURE, 120 PPMV
DECK CONFIGURATION A - ORIGINAL FWW

	✓	ITEM	QUANTITY NO. UNITS	QUANTITY UNIT MEAS.	LABOR / INSTAL PER UNIT	LABOR / INSTAL TOTAL	MAT. / EQUIP. PER UNIT	MAT. / EQUIP. TOTAL	TOTAL COST
1		**Fort Washington Way**							
2		**Covered Ventilation**							
3									
4		Propeller Fan	12	EA	$ 4,000	$ 48,000	$ 28,000	$ 336,000	$ 384,000
5		Housing	6	EA	$ 4,000	$ 24,000	$ 12,000	$ 72,000	$ 96,000
6		Jet Fan	12	EA	$ 4,000	$ 48,000	$ 30,000	$ 360,000	$ 408,000
7		Supports	12	EA	$ 4,000	$ 48,000	$ 2,000	$ 24,000	$ 72,000
8		Ductwork	1	LOT	$ 60,000	$ 60,000			$ 60,000
9		Air Devices	60	EA	$ 100	$ 6,000	$ 200	$ 12,000	$ 18,000
10									
11									
12									
13									
14		**Sub-Total**			$ 64,100	$ 114,000	$ 2,200	$ 36,000	$ 1,038,000
15									
16									
17		O&P	20%						$ 207,600
18		Contigency	15%						$ 155,700
19									
20		**Total Cost**							**$ 1,401,300**
21									
22									
23									
24									
25									
26									
27									
28									
29									
30									
31									
32									
33									

COST ESTIMATE WORK SHEET

Parsons Brinckerhoff
1831 Chestnut Street
St. Louis, Missouri 63103-2225
314/421-1467 Fax 314/421-5664

PROJECT
Fort Washington Way
Mechanical Cost
Schematic Design
Mechanical

PB PN 28907D
Sheet NO. 2.60.B
DATE 5/14/2001

SYSTEM 2 - SEMITRANSVERSE VENTILATION WITH EXHAUST ONLY
60-MINUTE EXPOSURE, 35 PPMV
DECK CONFIGURATION B - CONTINUOUS DECK AT VINE STREET

	✓	ITEM	QUANTITY NO. UNITS	QUANTITY UNIT MEAS.	LABOR / INSTAL PER UNIT	LABOR / INSTAL TOTAL	MAT. / EQUIP. PER UNIT	MAT. / EQUIP. TOTAL	TOTAL COST
1		**Fort Washington Way**							
2		**Covered Ventilation**							
3									
4		Propeller Fan	45	EA	$ 4,000	$ 180,000	$ 28,000	$ 1,260,000	$ 1,440,000
5		Housing	6	EA	$ 4,000	$ 24,000	$ 12,000	$ 72,000	$ 96,000
6		Jet Fan	12	EA	$ 4,000	$ 48,000	$ 30,000	$ 360,000	$ 408,000
7		Supports	12	EA	$ 4,000	$ 48,000	$ 2,000	$ 24,000	$ 72,000
8		Ductwork	1	LOT	$ 60,000	$ 60,000			$ 60,000
9		Air Devices	60	EA	$ 100	$ 6,000	$ 200	$ 12,000	$ 18,000
10		Traffic Control	1	LS					$ 250,000
11		Stand Pipe	1	LS					$ 50,000
12		Controls	1	LS					$ 160,000
13		Electric	1	LS					$ 1,000,000
14									
15									
16		**Sub-Total**			$ 100	$ 6,000	$ 200	$ 12,000	$ 3,554,000
17									
18									
19		O&P	20%						$ 710,800
20		Contigency	15%						$ 533,100
21									
22		**Total Cost**							**$ 4,797,900**
23									
24									
25									
26									
27									
28									
29									
30									
31									
32									
33									

COST ESTIMATE WORK SHEET

Parsons Brinckerhoff
1831 Chestnut Street
St. Louis, Missouri 63103-2225
314/421-1467 Fax 314/421-5664

PROJECT
Fort Washington Way
Mechanical Cost
Schematic Design
Mechanical

PB PN 28907D
Sheet NO. 3.15.A
DATE 1/22/2001

SYSTEM 3 - SEMITRANSVERSE VENTILATION WITH SUPPLY AND EXHAUST
15-MINUTE EXPOSURE, 120 PPMV
DECK CONFIGURATION A - ORIGINAL FWW

	✓	ITEM	QUANTITY NO. UNITS	QUANTITY UNIT MEAS.	LABOR / INSTAL PER UNIT	LABOR / INSTAL TOTAL	MAT. / EQUIP. PER UNIT	MAT. / EQUIP. TOTAL	TOTAL COST
1		**Fort Washington Way**							
2		**Covered Ventilation**							
3									
4		Propeller Fan	12	EA	$ 4,000	$ 48,000	$ 30,000	$ 360,000	$ 408,000
5		Housing	6	EA	$ 4,000	$ 24,000	$ 12,000	$ 72,000	$ 96,000
6		Jet Fan	12	EA	$ 4,000	$ 48,000	$ 30,000	$ 360,000	$ 408,000
7		Supports	12	EA	$ 4,000	$ 48,000	$ 2,000	$ 24,000	$ 72,000
8		Ductwork	1	LOT	$ 60,000	$ 60,000			$ 60,000
9		Air Devices	60	EA	$ 100	$ 6,000	$ 200	$ 12,000	$ 18,000
10									
11		**Sub-Total**			$ 72,100	$ 186,000	$ 44,200	$ 468,000	$ 1,062,000
12									
13									
14									
15		O&P	20%						$ 212,400
16		Contigency	15%						$ 159,300
17									
18		**Total Cost**							**$ 1,433,700**
19									
20									
21									
22									
23									
24									
25									
26									
27									
28									
29									
30									
31									
32									
33									

COST ESTIMATE WORK SHEET

Parsons Brinckerhoff
1831 Chestnut Street
St. Louis, Missouri 63103-2225
314/421-1467 Fax 314/421-5664

PROJECT
Fort Washington Way
Mechanical Cost
Schematic Design
Mechanical

PB PN 28907D
Sheet NO. 3.60.A
DATE 5/14/2001

SYSTEM 3 - SEMITRANSVERSE VENTILATION WITH SUPPLY AND EXHAUST
60-MINUTE EXPOSURE, 35 PPMV
DECK CONFIGURATION A - ORIGINAL FWW

	✓	ITEM	QUANTITY NO. UNITS	QUANTITY UNIT MEAS.	LABOR / INSTAL PER UNIT	LABOR / INSTAL TOTAL	MAT. / EQUIP. PER UNIT	MAT. / EQUIP. TOTAL	TOTAL COST
1		**Fort Washington Way**							
2		**Covered Ventilation**							
3									
4		Propeller Fan	42	EA	$ 4,000	$ 168,000	$ 30,000	$ 1,260,000	$ 1,428,000
5		Housing	21	EA	$ 4,000	$ 84,000	$ 12,000	$ 252,000	$ 336,000
6		Jet Fan	12	EA	$ 4,000	$ 48,000	$ 30,000	$ 360,000	$ 408,000
7		Supports	12	EA	$ 4,000	$ 48,000	$ 2,000	$ 24,000	$ 72,000
8		Ductwork	1	LOT	$ 60,000	$ 60,000			$ 60,000
9		Air Devices	60	EA	$ 100	$ 6,000	$ 200	$ 12,000	$ 18,000
10									
11		**Sub-Total**			$ 72,100	$ 246,000	$ 44,200	$ 648,000	$ 2,322,000
12									
13									
14									
15		O&P	20%						$ 464,400
16		Contigency	15%						$ 348,300
17									
18		**Total Cost**							**$ 3,134,700**
19									
20									
21									
22									
23									
24									
25									
26									
27									
28									
29									
30									
31									
32									
33									

COST ESTIMATE WORK SHEET

Parsons Brinckerhoff
1831 Chestnut Street
St. Louis, Missouri 63103-2225
314/421-1467 Fax 314/421-5664

PROJECT
Fort Washington Way
Mechanical Cost
Schematic Design
Mechanical

PB PN 28907D
Sheet NO. 3.60.B
DATE 5/14/2001

SYSTEM 3 - SEMITRANSVERSE VENTILATION WITH SUPPLY AND EXHAUST
60-MINUTE EXPOSURE, 35 PPMV
DECK CONFIGURATION B - CONTINUOUS DECK AT VINE STREET

	✓	ITEM	QUANTITY NO. UNITS	QUANTITY UNIT MEAS.	LABOR / INSTAL PER UNIT	LABOR / INSTAL TOTAL	MAT. / EQUIP. PER UNIT	MAT. / EQUIP. TOTAL	TOTAL COST
1		**Fort Washington Way**							
2		**Covered Ventilation**							
3									
4		Propeller Fan	46	EA	$ 4,000	$ 184,000	$ 28,000	$ 1,288,000	$ 1,472,000
5		Housing	23	EA	$ 4,000	$ 92,000	$ 12,000	$ 276,000	$ 368,000
6		Jet Fan	12	EA	$ 4,000	$ 48,000	$ 30,000	$ 360,000	$ 408,000
7		Supports	12	EA	$ 4,000	$ 48,000	$ 2,000	$ 24,000	$ 72,000
8		Ductwork	1	LOT	$ 60,000	$ 60,000			$ 60,000
9		Air Devices	60	EA	$ 100	$ 6,000	$ 200	$ 12,000	$ 18,000
10		Traffic Control	1	LS					$ 250,000
11		Stand Pipe	1	LS					$ 50,000
12		Controls	1	LS					$ 160,000
13		Electric	1	LS					$ 1,000,000
14									
15									
16		**Sub-Total**			$ 100	$ 6,000	$ 200	$ 12,000	$ 3,858,000
17									
18									
19		O&P	20%						$ 771,600
20		Contigency	15%						$ 578,700
21									
22		**Total Cost**							**$ 5,208,300**
23									
24									
25									
26									
27									
28									
29									
30									
31									
32									
33									

COST ESTIMATE WORK SHEET

Parsons Brinckerhoff
1831 Chestnut Street
St. Louis, Missouri 63103-2225
314/421-1467 Fax 314/421-5664

PROJECT
Fort Washington Way
Mechanical Cost
Schematic Design
Mechanical

PB PN 28907D
Sheet NO. 3.SMOKE.C
DATE 5/14/2001

SYSTEM 3 - SEMITRANSVERSE VENTILATION WITH SUPPLY AND EXHAUST
FIRE VENTILATION
DECK CONFIGURATION C - CONTINUOUS DECK FROM RACE TO WALNUT

	✓	ITEM	QUANTITY NO. UNITS	QUANTITY UNIT MEAS.	LABOR / INSTAL PER UNIT	LABOR / INSTAL TOTAL	MAT. / EQUIP. PER UNIT	MAT. / EQUIP. TOTAL	TOTAL COST
1		**Fort Washington Way**							
2		**Covered Ventilation**							
3									
4		Propeller Fan	42	EA	$ 4,000	$ 168,000	$ 30,000	$ 1,260,000	$ 1,428,000
5		Housing	21	EA	$ 4,000	$ 84,000	$ 12,000	$ 252,000	$ 336,000
6		Jet Fan	12	EA	$ 4,000	$ 48,000	$ 30,000	$ 360,000	$ 408,000
7		Supports	12	EA	$ 4,000	$ 48,000	$ 2,000	$ 24,000	$ 72,000
8		Ductwork	1	LOT					$ 720,000
9		Air Devices	60	EA	$ 100	$ 6,000	$ 200	$ 12,000	$ 18,000
10		Traffic Control	1	LS					$ 250,000
11		Stand Pipe	1	LS					$ 50,000
12		Controls	1	LS					$ 160,000
13		Electric	1	LS					$ 1,000,000
14									
15		**Sub-Total**			$ 100	$ 6,000	$ 200	$ 12,000	$ 4,442,000
16									
17									
18									
19		O&P	20%						$ 888,400
20		Contigency	30%						$ 1,332,600
21									
22		**Total Cost**							**$ 6,663,000**
23									
24									
25									
26									
27									
28									
29									
30									
31									
32									
33									

COST ESTIMATE WORK SHEET

Parsons Brinckerhoff
1831 Chestnut Street
St. Louis, Missouri 63103-2225
314/421-1467 Fax 314/421-5664

PROJECT
Fort Washington Way
Mechanical Cost
Schematic Design
Mechanical

PB PN	28907D
Sheet NO.	4.15.A
DATE	1/22/2001

SYSTEM 4 - SEMITRANSVERSE VENTILATION WITH SMALLEST SUPPLY AND EXHAUST
15-MINUTE EXPOSURE, 120 PPMV
DECK CONFIGURATION A - ORIGINAL FWW

	✓	ITEM	QUANTITY		LABOR / INSTAL		MAT. / EQUIP.		TOTAL
			NO. UNITS	UNIT MEAS.	PER UNIT	TOTAL	PER UNIT	TOTAL	COST
1		**Fort Washington Way**							
2		**Covered Ventilation**							
3									
4		Propeller Fan	36	EA	$ 4,000	$ 144,000	$ 10,000	$ 360,000	$ 504,000
5		Housing	36	EA	$ 4,000	$ 144,000	$ 4,000	$ 144,000	$ 288,000
6		Jet Fan	12	EA	$ 4,000	$ 48,000	$ 30,000	$ 360,000	$ 408,000
7		Supports	12	EA	$ 4,000	$ 48,000	$ 2,000	$ 24,000	$ 72,000
8		Ductwork	1	LOT	$ 60,000	$ 60,000			$ 60,000
9		Air Devices	60	EA	$ 100	$ 6,000	$ 200	$ 12,000	$ 18,000
10									
11		**Sub-Total**			$ 72,100	$ 306,000	$ 36,200	$ 540,000	$ 1,350,000
12									
13									
14									
15		O&P	20%						$ 270,000
16		Contigency	15%						$ 202,500
17									
18		**Total Cost**							**$ 1,822,500**
19									
20									
21									
22									
23									
24									
25									
26									
27									
28									
29									
30									
31									
32									
33									

APPENDIX F

Construction Drawings